ARMY TM 9-1290-364-14&P
MARINE CORPS TM 09814A-14&P

Supersedes copy of 10 December 1996
See page i for details

TECHNICAL MANUAL

OPERATOR, UNIT, DIRECT SUPPORT, AND GENERAL SUPPORT MAINTENANCE MANUAL INCLUDING REPAIR PARTS AND SPECIAL TOOLS LIST THROUGH DEPOT LEVEL FOR

CONVENTIONAL MUZZLE VELOCITY SYSTEM M94

PART NUMBER: 12950994
NSN: 1290-01-412-5760 (EIC: 3TD)

AND, COMMUNICATION ADAPTER (MCA)

PART NUMBER: 11838876
NSN: 1290-01-468-6533

CONTRACT NUMBER: DAAA09-94-C-0310

Manufactured By
RSL ELECTRONICS USA INC.
70 Round Hill Road
Poughkeepsie, NY 12603
CAGE: 0WKM4

DISTRIBUTIONS STATEMENT A: Approved for public release: distribution is unlimited.

DESTRUCTION NOTICE: Destroy by any method that will prevent disclosure of contents or reconstruction of the document.

HEADQUARTERS, DEPARTMENT OF THE ARMY
HEADQUARTERS, US. MARINE CORPS

15 DECEMBER 2001

Change No. 1

**HEADQUARTERS
DEPARTMENT OF THE ARMY
Washington, DC, 2002
14 June 2002**

OPERATOR, UNIT, DIRECT SUPPORT AND GENERAL SUPPORT MAINTENANCE MANUAL INCLUDING REPAIR PARTS AND SPECIAL TOOLS LIST THROUGH DEPOT LEVEL

FOR

CONVENTIONAL MUZZLE VELOCITY SYSTEM M94

PART NUMBER: 12950994
NSN: 1290-01-412-5760 (EIC: 3TD)

AND, COMMUNICATION ADAPTER (MCA)

PART NUMBER: 11838876
NSN: 1290-01-468-6533

TM 9-1290-364-14&P, 15 December 2001, is changed as follows:

1. Remove old pages and insert new pages as indicated below.
2. A vertical bar in the margin or C1 after the manual number indicates new or changed material on the pages.

Remove Pages	Insert Pages
A/(B blank)	A/(B blank)
NONE	C-155 thru C-176

File this change sheet in the front of the publication for reference purposes.

By Order of the Secretary of the Army:

ERIC K. SHINSEKI
General, United States Army
Chief of Staff

Official:

Administrative Assistant to the
Secretary of the Army

0126203

DISTRIBUTION: To be distributed in accordance with the initial distribution requirements for TM 9-1290-364-14&P, IDN 401102:

PIN: 075175-001

SAFETY SUMMARY

45TH.1 DEFINITIONS

The following definitions apply to the warnings, cautions, and notes used throughout this manual:

WARNING

Operating procedures, techniques, etc., that may result in personal injury or loss of life if not carefully followed.

CAUTION

Operating procedures, techniques, etc., that may result in damage to equipment if not carefully followed.

NOTE

Operating procedures, techniques, etc., that are considered essential to emphasize.

The following are general safety precautions that are not related to any specific procedures and therefore do not appear elsewhere in this publication. These are recommended precautions that personnel must understand and apply during many phases of operation and maintenance.

45TH.2 KEEP AWAY FROM LIVE CIRCUITS

Operating personnel must at all times observe all safety regulations. Do not replace components inside the equipment with the voltage supply turned on. Under certain conditions, dangerous potentials may exist when the power control is in the off position due to charges retained by capacitors. To avoid casualties, always remove power and discharge and ground a circuit before touching it.

45TH.3 DO NOT SERVICE OR ADJUST ALONE

Under no circumstances should any person service or adjust the equipment except in the presence of someone who is capable of rendering aid.

45TH.4 RESUSCITATION

Personnel working with or near high voltages should be familiar with modern methods of resuscitation. Such information may be obtained from the Bureau of Medicine and Surgery.
The following warnings and cautions appear in the text of this manual and are repeated here for emphasis.

WARNING

Electrical power shall be removed (off) before disconnecting or connecting electrical connectors or connections, or removing or installing units or components. Inadvertent contact with voltages present may be fatal. Connector pins may be damaged by arcing.

WARNING

Use solvent in a well-ventilated area. Avoid breathing vapors. Keep away from flame.

WARNING

Use methylethylketone (MEK) in a well-ventilated area. Avoid breathing vapors. Keep away from flame.

WARNING

Certain circuits operate with high voltages. Ensure that test equipment is off prior to any replacement.

WARNING

Use RTV732 sealant in well-ventilated area. Prevent eye and skin contact. Avoid breathing vapors.

CAUTION

This equipment contains assemblies subject to damage by electrostatic discharge. Use approved grounding procedures before touching, removing, or inserting circuit card assemblies.

CAUTION

Do not immerse electronic parts in solvent.

CAUTION

Do not accelerate RTV curing by heating.

CAUTION

The transceiver is susceptible to damage by electrostatic discharge. Handling of the transceiver electronic assembly and transceiver should be performed at a static-free station and with grounded measurement instruments.

CAUTION

Damage will occur to the Doppler Simulator if batteries are placed in Simulator backward.

45TH.5 EXPLANATION OF HAZARD SYMBOLS

The symbol of drops of a liquid onto a hand shows that the material will cause burns or irritation of human skin or tissue.

The symbol of a human figure in a cloud shows that vapors of the material present a danger to your life or health.

The symbol of a person wearing goggles shows that the material will injure your eyes.

The symbol of a flame shows that the material can ignite and burn you.

The symbol shows that the item is sensitive to electrostatic discharge (ESD).

LIST OF EFFECTIVE PAGES

Insert latest changed pages, dispose of superseded pages according to instructions.

Total number of pages in this manual is **809** consisting of the following:

Original.....0 ..... 15 December 2001
Change.....1..... 14June 2002

Page No. Change No. Page No. Change No. Page No. Change No.

Front Cover 0
SS-1 to SS-4.....0
i to xvi.....0
1-1 to 1-38.....0
2-1 to 2-30.....0
3-1 to 3-192.....0
4-1 to 4-46.....0
5-1 to 5-2.....0
6-1 to 6-4.....0
7-1 to 7-2.....0
A-1 to A-8.....0
B-1 to B-10.....0
C-1 to C-154.....0
C-155 to C-176.....1
D-1 to D-128.....0
E-1 to E-6.....0
F-1 to F-4 0
G-1 to G-6.....0
H-1 to H-88.....0
H-125 to H-130.....0
FO-1 to FO-26.....0
Back Cover.....0

TECHNICAL MANUAL
ARMY TM 9-1290-364-14&P*
MARINE CORPS TM 09814A-14&P

HEADQUARTERS
DEPARTMENT OF THE ARMY
HEADQUARTERS
U.S. MARINE COPRS
Washington, D. C., 15 December 2001

OPERATOR, UNIT, DIRECT SUPPORT, AND GENERAL SUPPORT MAINTENANCE MANUAL INCLUDING REPAIR PARTS AND SPECIAL TOOLS LIST THROUGH DEPOT LEVEL FOR CONVENTIONAL MUZZLE VELOCITY SYSTEM M94

PART NUMBER: 12950994
NSN: 1290-01-412-5760 (EIC: 3TD)

AND, COMMUNICATION ADAPTER (MCA)

PART NUMBER: 11838876
NSN: 1290-01-468-6533

Current as of 19 September 2001 for Appendix C

Reporting errors and recommending improvements

You can help improve this publication. If you find any mistakes or if you know of a way to improve the procedures, please let us know. Submit your DA Form 2028 (Recommended Changes to Equipment Technical Publications), through the Internet, on the Army Electronic Product Support (AEPS) website. The Internet address is http://aeps.ria.army.mil. If you need a password, scroll down and click on "ACCESS REQUEST FORM". The DA Form 2028 is located in the ONLINE FORMS PROCESSING section of the AEPS. Fill out the form and click on SUBMIT. Using this form on the AEPS will enable us to respond quicker to your comments and better manage the DA Form 2028 program. You may also mail, fax or E-mail your letter or DA Form 2028 direct to: AMSTA-LC-CI / TECH PUBS, TACOM-RI, 1 Rock Island Arsenal, Rock Island, IL 61299-7630. The email address is TACOM-TECH-PUBS@ria.army.mil. The fax number is DSN 793-0726 or Commercial (309) 782-0726.

DISTRIBUTIONS STATEMENT A: Approved for public release: distribution is unlimited.

TABLE OF CONTENTS

Page

LIST OF ILLUSTRATIONS xxi

LIST OF TABLES xxvii

SAFETY SUMMARY SS-1

SS.1 DEFINITIONS SS-1
SS.2 KEEP AWAY FROM LIVE CIRCUITS SS-1
SS.3 DO NOT SERVICE OR ADJUST ALONE SS-1
SS.4 RESUSCITATION SS-1
SS.5 EXPLANATION OF HAZARD SYMBOLS SS-4

*This manual supersedes TM 9-1290-364-14&P, dated 19 December 1996, including all changes.

TABLE OF CONTENTS (CONT)

CHAPTER 1 GENERAL INFORMATION AND SYSTEM DESCRIPTION 1-1

SECTION I. GENERAL INFORMATION 1-1

1.1 SCOPE 1-2
1.2 EQUIPMENT NAME AND PART NUMBERS 1-2
1.3 PURPOSE OF EQUIPMENT 1-3
1.4 MAINTENANCE FORMS AND PROCEDURES 1-3
1.5 SAFETY, CARE, AND HANDLING 1-3
1.5.1 ELECTROSTATIC DISCHARGE (ESD) AWARENESS 1-3
1.5.2 TYPICAL PRIME CHARGE SOURCES 1-4
1.5.3 PRIME CHARGE CARRIERS 1-4
1.5.4 ITEMS TO AVOID 1-9
1.5.5 HANDLING UNPACKAGED ESD SENSITIVE ITEMS 1-9
1.5.6 PACKAGING AND LABELING ESD SENSITIVE LTEMS/ASSEMBLIES 1-9
1.5.7 TYPES OF ESD SENSITIVE DEVICES 1-9
1.5.8 ARMY ADOPTED CONFIGURATION 1-10
1.5.9 PRECAUTIONS WITHIN 20-FOOT (6-METER) DISTANCE 1-10
1.5.10 PRECAUTIONS WITHIN 50-FOOT (15-METER) DISTANCE 1-10
1.5.11 CHAIRS 1-10
1.6 CORROSION PREVENTION AND CONTROL 1-10
1.6.1 U.S. ARMY PROCEDURES 1-10
1.6.2 U.S. MARINE CORPS PROCEDURES 1-11
1.7 DESTRUCTION OF ARMY MATERIEL TO PREVENT ENEMY USE 1-11
1.8 DECONTAMINATION OF COMPONENTS 1-11
1.9 REPORTING EQUIPMENT IMPROVEMENT RECOMMENDATIONS (EIR) 1-11
1.9.1 U.S. ARMY PROCEDURES 1-11
1.9.2 U.S. MARINE CORPS PROCEDURES 1-12

SECTION II. EQUIPMENT DESCRIPTION 1-13

1.10 EQUIPMENT FEATURES 1-13
1.11 EQUIPMENT PERFORMANCE 1-14
1.12 PHYSICAL CHARACTERISTICS 1-16
1.13 POWER REQUIREMENTS 1-17
1.14 ENVIRONMENTAL INFORMATION 1-17
1.15 PRINCIPLES OF OPERATION 1-17
1.16 MUZZLE VELOCITY MEASUREMENT AND CALCULATION 1-18
1.17 SYSTEM INTERCONNECTION 1-18

SECTION III. COMPONENT DESCRIPTION 1-20

1.18 CONTROL PROCESSOR AND DISPLAY UNIT (CPDU) 1-21
1.18.1 DISPLAY 1-21
1.18.2 KEYBOARD 1-21
1.18.3 FRONT PANEL ASSEMBLY 1-21
1.18.4 BACK COVER ASSEMBLY 1-25
1.18.5 CARD CAGE 1-25
1.18.6 CPDU MUZZLE VELOCITY PROCESSOR (MVP) 1-26
1.18.7 POWER SUPPLY (PS) MODULE 1-29
1.19 TRANSCEIVER ASSEMBLY 1-30

1.19.1 RF SYSTEM 1-31
1.19.2 DOPPLER AMPLIFIER CCA 1-31
1.19.3 LINEAR POWER SUPPLY MODULE 1-32
1.19.4 MECHANICAL CONSTRUCTION 1-33
1.19.5 RF SECTION 1-33
1.19.6 BACK COVER ASSEMBLY 1-33
1.20 DOPPLER SIMULATOR 1-35
1.21 MOUNTING BRACKET 1-36
1.22 INTERCONNECTION CABLES 1-37
1.23 POWER ADAPTER 1-38
1.24 SECONDARY POWER SOURCE 1-38
1.25 SYSTEM TRANSIT CASE 1-38

CHAPTER 2 OPERATING INSTRUCTIONS 2-1

2.1 CONCISE OPERATING INSTRUCTIONS 2-2
2.1.1 MEASUREMENT PROCESS 2-2
2.1.2 SYSTEM SELF-TESTS 2-4
2.2 OPERATING INSTRUCTIONS 2-5
2.3 CPDU KEYBOARD 2-5
2.4 EDITING MODE 2-6
2.4.1 ENDING DATA ENTRY 2-6
2.4.2 CORRECTING MISTAKES 2-6
2.4.3 ENTERING LETTERS OF THE ALPHABET 2-7
2.4.4 ACCEPTING DEFAULT VALUES 2-7
2.5 POP-UP HELP SCREENS 2-7
2.6 POWERING UP SYSTEM 2-9

2.7 POWER FAIL RECOVERY 2-10
2.8 ENTERING/EDITING MISSION DATA 2-10
2.8.1 EDITING MISSION DATA 2-13
2.9 MEASURING ROUNDS 2-15
2.10 CHANGING PROPELLANT TEMPERATURE 2-15
2.11 CHANGING PROJECTILE WEIGHT 2-16
2.12 MISSION MUZZLE VELOCITY VARIATION 2-16
2.13 STORING MISSION MVV 2-17
2.14 DELETING MVV FROM MEMORY 2-19
2.15 DISCARDING ROUNDS FROM MISSION 2-21
2.16 RETRIEVING STORED MVVS 2-22
2.17 ENDING MISSION 2-23
2.18 SYSTEM TESTS 2-24
2.18.1 CPDU TEST 2-24
2.18.2 SYSTEM TEST 2-27
2.19 MVS SPECIAL OPERATING MODE 2-28

CHAPTER 3 MAINTENANCE INSTRUCTIONS 3-1

SECTION I. GENERAL INSTRUCTIONS 3-2

3.1 GENERAL 3-2
3.1.1 MAINTENANCE SCHEDULING 3-2
3.1.2 TEST EQUIPMENT AND SPECIAL TOOLS REQUIRED 3-3

TABLE OF CONTENTS (CONT)

3.1.3 MATERIALS REQUIRED 3-4
3.1.4 CLEANING AND LUBRICATION 3-4
3.1.5 EXTERNAL INSPECTION 3-5
3.1.6 INTERNAL INSPECTION 3-5
3.1.7 CABLE TESTING 3-6
3.1.8 MINOR REPAIRS 3-6
3.1.9 REFINISH OF PAINTED SURFACES 3-6
3.1.10 REPLACEMENT OF IDENTIFICATION PLATES 3-7
3.1.11 REPAIR OF ASSEMBLIES 3-7
3.1.12 PERFORMANCE VERIFICATION 3-7
3.1.13 MVS TROUBLESHOOTING 3-7

SECTION II. CPDU ASSY, P/N AY6706709-0 3-12

3.2 CPDU ASSY, P/N AY6706709-0 3-12
3.2.1 GENERAL 3-12
3.2.2 TEST EQUIPMENT AND SPECIAL TOOLS REQUIRED 3-12
3.2.3 MATERIALS REQUIRED 3-13
3.2.4 GENERAL REPAIR REQUIREMENTS 3-13
3.2.5 DISASSEMBLY 3-14
3.2.6 ASSEMBLY 3-15
3.2.7 INSPECTION 3-15
3.2.8 FUNCTIONAL TEST 3-18
3.1.9 FAULT ISOLATION 3-27
3.1.10 CPDU POWER SUPPLY MALFUNCTION ISOLATION 3-28

SECTION III. TRANSCEIVER ASSY, P/N'S AY6706571-0 AND AY6706571-2 3-30

3.3 TRANSCEIVER ASSY, P/N AY6706571-0, AY6706571-2 3-30
3.3.1 GENERAL 3-30
3.3.2 TEST EQUIPMENT AND SPECIAL TOOLS REQUIRED 3-31
3.3.3 MATERIALS REQUIRED 3-31
3.3.4 GENERAL REPAIR REQUIREMENTS 3-32
3.3.5 TRANSCEIVER ASSY DISASSEMBLY 3-33
3.3.6 TRANSCEIVER ASSY ASSEMBLY 3-38
3.3.7 VISUAL INSPECTION 3-39
3.3.8 TRANSCEIVER ASSY TROUBLESHOOTING 3-39
3.3.9 TRANSCEIVER ASSY MAJOR SRU FAULT ISOLATION 3-43

SECTION IV. DISPLAY MODULE, P/N AY6706702-0 AND AY6706702-1 3-49

3.4 DISPLAY MODULE, P/N AY6706702-0, AY6706702-1 3-49
3.4.1 GENERAL 3-49
3.4.2 TEST EQUIPMENT AND SPECIAL TOOLS REQUIRED 3-49
3.4.3 MATERIALS REQUIRED 3-51
3.4.4 GENERAL REPAIR REQUIREMENT 3-52
3.4.5 REMOVAL 3-52
3.4.6 INSTALLATION 3-53
3.4.7 INSPECTION 3-53
3.4.8 CONTINUITY TEST 3-53
3.4.9 FUNCTIONAL TEST 3-54

SECTION V. KEYBOARD CCA, P/N AY6704586-0 3-62

3.5 KEYBOARD CCA, P/N AY6704586-0 3-62
3.5.1 GENERAL 3-62
3.5.2 TEST EQUIPMENT AND SPECIAL TOOLS REQUIRED 3-62
3.5.3 MATERIALS REQUIRED 3-63
3.5.4 GENERAL REPAIR REQUIREMENTS 3-63
3.5.5 REMOVAL 3-64
3.5.6 INSTALLATION 3-67
3.5.7 INSPECTION 3-67
3.5.8 FUNCTIONAL TEST 3-68

SECTION VI. EMI MODULE, P/N AY6706705-1 3-74

3.6 EMI MODULE, P/N AY6706705-1 3-74
3.6.1 GENERAL 3-74
3.6.2 TEST EQUIPMENT AND SPECIAL TOOLS REQUIRED 3-74
3.6.3 MATERIALS REQUIRED 3-75
3.6.4 GENERAL REPAIR REQUIREMENTS 3-76
3.6.5 REMOVAL 3-76
3.6.6 INSTALLATION. 3-77
3.6.7 INSPECTION 3-79
3.6.8 CONTINUIT Y TEST 3-79

SECTION VII. MOTHERBOARD CCA, P/N AY6706706-0 3-86

3.7 MOTHERBOARD CCA, P/N AY6706706-0 3-86
3.7.1 GENERAL 3-86
3.7.2 TEST EQUIPMENT AND SPECIAL TOOLS REQUIRED 3-86
3.7.3 MATERIALS REQUIRED 3-87
3.7.4 GENERAL REPAIR REQUIREMENTS 3-87
3.7.5 REMOVAL 3-88
3.7.6 INSTALLATION 3-89
3.7.7 INSPECTION 3-89
3.7.8 CONTINUITY TEST 3-89

SECTION VIII. DOPPLER AMPLIFIER CCA, P/N AY6706566-0 3-93

3.8 DOPPLER AMPLIFIER CCA, P/N AY6706566-0 3-93
3.8.1 GENERAL 3-93
3.8.2 TEST EQUIPMENT AND SPECIAL TOOLS REQUIRED 3-93
3.1.3 MATERIALS REQUIRED 3-94
3.1.4 GENERAL REPAIR REQUIREMENTS 3-94
3.1.5 REMOVAL 3-95
3.1.6 INSTALLATION 3-96
3.1.7 INSPECTION 3-96
3.1.8 FUNCTIONAL TEST 3-99
3.1.9 TROUBLESHOOTING 3-103

SECTION IX. LINEAR POWER SUPPLY MODULE, P/N AY6706620-0 3-106

3.9 LINEAR POWER SUPPLY MODULE, P/N AY6706620-0 3-106
3.9.1 GENERAL 3-106
3.9.2 TEST EQUIPMENT AND SPECIAL TOOLS REQUIRED 3-107

TABLE OF CONTENTS (CONT)

3.9.3 MATERIALS REQUIRED 3-107
3.9.4 GENERAL REPAIR REQUIREMENTS 3-108
3.9.5 REMOVAL 3-108
3.9.6 DISASSEMBLY 3-109
3.9.7 ASSEMBLY 3-109
3.9.8 INSTALLATION 3-109
3.9.9 INSPECTION 3-113
3.9.10 FUNCTIONAL TEST 3-113
3.1.11 TROUBLESHOOTING 3-116
3.1.12 OUTPUT POWER ADJUSTMENT PROCEDURE 3-119

SECTION X. DOPPLER SIMULATOR, P/N AY6706690-0 3-120

3.10 DOPPLER SIMULATOR, P/N AY6706690-0 3-120
3.10.1 GENERAL 3-120
3.10.2 TEST EQUIPMENT AND SPECIAL TOOLS REQUIRED 3-120
3.1.3 MATERIALS REQUIRED 3-121
3.1.4 GENERAL REPAIR REQUIREMENTS 3-121
3.1.5 DISASSEMBLY 3-122
3.1.6 INSPECTION 3-123
3.1.7 ASSEMBLY 3-128
3.1.8 FUNCTIONAL TEST 3-128
3.1.9 TROUBLESHOOTING 3-132
3.1.10 ADJUSTMENT PROCEDURE 3-135

SECTION XI. BRACKET ASSEMBLY, P/N 12922098 3-136

3.11 BRACKET ASSEMBLY, P/N 12922098 3-136
3.11.1 GENERAL 3-136
3.11.2 SPECIAL TOOLS REQUIRED 3-136
3.11.3 MATERIALS REQUIRED 3-137
3.11.4 INSPECTION 3-137
3.11.5 REMOVAL 3-137
3.11.6 INSTALLATION 3-137
3.11.7 DISASSEMBLY 3-137
3.11.8 ASSEMBLY 3-138

SECTION XII. INTERCONNECTION CABLE (30-METER), P/N WA6706719-0 3-140

3.12 INTERCONNECTION CABLE (30-METER), P/N WA6706719-0 3-140
3.12.1 GENERAL 3-140
3.12.2 TEST EQUIPMENT AND SPECIAL TOOLS REQUIRED 3-140
3.12.3 MATERIALS REQUIRED 3-141
3.12.4 GENERAL REPAIR REQUIREMENTS 3-141
3.12.5 INSPECTION 3-143
3.12.6 CONTINUITY TEST 3-143

SECTION XIII. POWER CABLE (50-METER), P/N WA6706717-0 3-146

3.13 POWER CABLE (50-METER), P/N WA6706717-0 3-146
3.13.1 GENERAL 3-146
3.13.2 TEST EQUIPMENT AND SPECIAL TOOLS REQUIRED 3-146

3.13.3 MATERIALS REQUIRED 3-147
3.13.4 GENERAL REPAIR REQUIREMENTS 3-147
3.13.5 INSPECTION 3-149
3.13.6 CONTINUITY TEST 3-149

SECTION XIV. SECONDARY POWER SOURCE CABLE, P/N WA6708023-0 3-152

3.14 SECONDARY POWER SOURCE CABLE, P/N WA6708023-0 3-152
3.14.1 GENERAL 3-152
3.14.2 TEST EQUIPMENT AND SPECIAL TOOLS REQUIRED 3-152
3.14.3 MATERIALS REQUIRED 3-153
3.14.4 GENERAL REPAIR REQUIREMENTS 3-153
3.14.5 INSPECTION 3-155
3.14.6 CONTINUITY TEST 3-155

SECTION XV. POWER ADAPTER, P/N WA6706718-0 3-158

3.15 POWER ADAPTER, P/N WA6706718-0 3-158
3.15.1 GENERAL 3-158
3.15.2 TEST EQUIPMENT AND SPECIAL TOOLS REQUIRED 3-158
3.15.3 MATERIALS REQUIRED 3-159
3.15.4 GENERAL REPAIR REQUIREMENTS 3-159
3.15.5 DISASSEMBLY 3-160
3.15.6 ASSEMBLY 3-160
3.15.7 INSPECTION 3-160
3.15.8 CONTINUITY TEST 3-160

SECTION XVI. FRONT PANEL ASSEMBLY, P/N AY6706708-0 3-163

3.16 FRONT PANEL ASSEMBLY, P/N AY6706708-0 3-163
3.16.1 GENERAL 3-163
3.16.2 TEST EQUIPMENT AND SPECIAL TOOLS REQUIRED 3-164
3.16.3 MATERIALS REQUIRED 3-164
3.16.4 GENERAL REPAIR REQUIREMENTS 3-164
3.16.5 REMOVAL 3-165
3.16.6 INSTALLATION 3-165
3.16.7 REPLACEMENT OF ADHESIVE-MOUNTED EMI GLASS (WINDOW) 3-170

SECTION XVII. CPDU COVER ASSEMBLY, P/N AM6706693-0 3-172

3.17 CPDU COVER ASSEMBLY, P/N AM6706693-0 3-172
3.17.1 GENERAL 3-172
3.17.2 SPECIAL TOOLS REQUIRED 3-172
3.17.3 MATERIALS REQUIRED 3-172
3.17.4 GENERAL REPAIR REQUIREMENTS 3-173
3.17.5 INSPECTION 3-173
3.17.6 DISASSEMBLY 3-173
3.17.7 ASSEMBLY 3-173

SECTION XVIII. HARNESS ASSY, P/N WA6706707-0 3-175

3.18 HARNESS ASSY, P/N WA6706707-0 3-175
3.18.1 GENERAL 3-175
3.18.2 TEST EQUIPMENT AND SPECIAL TOOLS REQUIRED 3-175
3.18.3 MATERIALS REQUIRED 3-176

TABLE OF CONTENTS (CONT)

3.18.4 GENERAL REPAIR REQUIREMENTS 3-176
3.18.5 REMOVAL 3-177
3.18.6 INSTALLATION 3-180
3.18.7 REPLACEMENT 3-180
3.18.8 INSPECTION 3-181
3.18.9 FAULT ISOLATION 3-182

SECTION XIX. CABLE DRUM, P/N AM6707950-0 3-186

3.19 CABLE DRUM, P/N AM6707950-0 3-186
3.19.1 GENERAL 3-186
3.19.2 TEST EQUIPMENT AND SPECIAL TOOLS REQUIRED 3-186
3.19.3 MATERIALS REQUIRED 3-187
3.19.4 GENERAL REPAIR PROCEDURES 3-187
3.19.5 DISASSEMBLY 3-187
3.19.6 ASSEMBLY 3-187
3.19.7 INSPECTION 3-189

SECTION XX. CARRYING CASE, P/N AM6706714-0 3-190

3.20 CARRYING CASE, P/N AM6706714-0 3-190
3.20.1 GENERAL 3-190
3.20.2 TEST EQUIPMENT AND SPECIAL TOOLS REQUIRED 3-190
3.20.3 MATERIALS REQUIRED 3-191
3.20.4 GENERAL REPAIR REQUIREMENTS 3-191
3.20.5 DISASSEMBLY 3-191
3.20.6 ASSEMBLY 3-192

CHAPTER 4 REPROGRAMMING 4-1

4.1 GENERAL 4-2
4.2 REPROGRAMMING 4-3
4.2.1 REPROGRAMMING SET-UP 4-3
4.2.2 REQUIRED EQUIPMENT 4-3
4.3 UTILITY SOFTWARE 4-7
4.3.1 UTILITY SOFTWARE CD 4-7
4.3.2 CD CONTENTS 4-7
4.3.3 CD DIRECTORY STRUCTURE 4-7
4.3.4 ROOT DIRECTORY 4-7
4.3.5 SOURCES AND DISTRIBUTION SUBDIRECTORIES 4-8
4.3.6 DISTRIBUTION UTILITY DIRECTORY 4-8
4.3.7 SOURCE UTILITY DIRECTORY 4-8
4.4 M94 UPLOAD/DOWNLOAD P/N PF67012423 4-9
4.4.1 GENERAL DESCRIPTION 4-9
4.4.2 PROGRAM COMPONENTS AND CONFIGURATION 4-10
4.4.3 APPLICABLE DOCUMENTS 4-10
4.4.4 OPERATION INSTRUCTIONS 4-11
4.5 M94 MVV EDITOR P/N PF67012424 4-15
4.5.1 GENERAL DESCRIPTION 4-15
4.5.2 PROGRAM COMPONENTS AND CONFIGURATION 4-16
4.5.3 APPLICABLE DOCUMENTS 4-16

4.5.4 OPERATION INSTRUCTIONS 4-17
4.6 M94 FCI DATABASE EDITOR P/N PF67012425 4-29
4.6.1 GENERAL DESCRIPTION 4-29
4.6.2 PROGRAM COMPONENTS AND CONFIGURATION 4-30
4.6.3 APPLICABLE DOCUMENTS 4-30
4.6.4 NOMENCLATURE AND PARAMETERS 4-30
4.6.5 DATA RANGES AND LIMITATIONS 4-32
4.6.6 OPERATION INSTRUCTIONS 4-34
4.7 M94 REMOTE CONTROL P/N PF67012426 4-46
4.7.1 GENERAL DESCRIPTION 4-46
4.7.2 PROGRAM COMPONENTS 4-46
4.7.3 APPLICABLE DOCUMENTS 4-46
4.7.4 OPERATION INSTRUCTIONS 4-46

CHAPTER 5 UNPACKING AND INSTALLATION 5-1

5.1 GENERAL 5-1
5.1.1 UNPACKING 5-1
5.1.2 INSTALLATION 5-2
5.1.3 INSTALLATION OF TRANSCEIVER ASSEMBLY ON GUN 5-2
5.1.4 SYSTEM INTERCONNECTION 5-2

CHAPTER 6 PREPARATION FOR SHIPMENT 6-1

6.1 GENERAL 6-1
6.1.1 SHIPPING M94 MVS IN CRATES 6-2
6.1.2 SHIPPING M94 MVS WITHOUT PACKING 6-2
6.1.3 SHIPPING CPDU OR TRANSCEIVER ASSEMBLY 6-2
6.1.4 SHIPPING ELECTRONIC PARTS 6-2

CHAPTER 7 STORAGE 7-1

7.1 GENERAL 7-1
7.1.1 PREPARATION FOR STORAGE 7-1
7.1.2 ENVIRONMENT 7-2
7.1.3 RETURN TO SERVICE 7-2

APPENDIX A REFERENCES A-1

A.1 GENERAL A-1
A.1.1 FORMS A-1
A.1.2 FIELD MANUALS A-2
A.2 TECHNICAL MANUALS A-2
A.3 MISCELLANEOUS PUBLICATIONS A-2

APPENDIX B MAINTENANCE ALLOCATION CHART (MAC) (FOR ARMY ONLY) B-1

B.1 GENERAL B-2
B.2 MAINTENANCE FUNCTIONS B-3
B.2.1 INSPECT B-3
B.2.2 TEST B-3
B.2.3 SERVICE B-3
B.2.4 ADJUST B-3
B.2.5 ALIGN B-3

TABLE OF CONTENTS (CONT)

B.2.6 CALIBRATE B-3
B.2.7 REMOVE/INSTALL B-3
B.2.8 REPLACE B-3
B.2.9 REPAIR B-4
B.2.10 OVERHAUL B-4
B.2.11 REBUILD B-4
B.3 EXPLANATION OF COLUMNS IN THE MAC - SECTION II B-5
B.3.1 COLUMN 1, GROUP NUMBER B-5
B.3.2 COLUMN 2, COMPONENT/ASSEMBLY B-5
B.3.3 COLUMN 3, MAINTENANCE FUNCTION B-5
B.3.4 COLUMN 4, MAINTENANCE LEVEL B-5
B.3.5 COLUMN 5, TOOLS AND TEST EQUIPMENT REFERENCE CODE B-5
B.3.6 COLUMN 6, REMARKS B-6
B.4 EXPLANATION OF COLUMNS IN TOOL AND TEST EQUIPMENT REQUIREMENTS, SECTION III B-7
B.4.1 COLUMN 1, REFERENCE CODE B-7
B.4.2 COLUMN 2, MAINTENANCE LEVEL B-7
B.4.3 COLUMN 3, NOMENCLATURE B-7
B.4.4 COLUMN 4, NATIONAL STOCK NUMBER B-7
B.4.5 COLUMN 5, TOOL NUMBER B-7
B.5 EXPLANATION OF COLUMNS IN REMARKS - SECTION IV B-8
B.5.1 COLUMN 1, REMARKS CODE B-8
B.5.2 COLUMN 2, REMARKS B-8

APPENDIX C REPAIR PARTS AND SPECIAL TOOLS LIST C-1

SECTION I. INTRODUCTION C-1

C.1 GENERAL C-2
C.2 RPSTL DESCRIPTION C-2
C.2.1 SECTION I - INTRODUCTION C-2
C.2.2 SECTION II - REPAIR PARTS LIST C-2
C.2.3 SECTION III - SPECIAL TOOLS LIST C-2
C.2.4 SECTION IV - CROSS-REFERENCE INDEXES C-2
C.3 EXPLANATION OF COLUMNS (SECTIONS II AND III) C-2
C.3.1 ITEM NO. (COLUMN 1) C-2
C.3.2 SM&R CODE (COLUMN 2) C-3
C.3.3 CAGEC (COLUMN 3) C-7
C.3.4 PART NUMBER (COLUMN 4) C-7
C.3.5 DESCRIPTION AND USABLE ON CODE (UOC) (COLUMN 5) C-7
C.3.6 QTY (COLUMN 6) C-7
C.4 EXPLANATION OF COLUMNS (SECTION IV) C-8
C.4.1 NATIONAL STOCK NUMBER (NSN) INDEX C-8
C.4.2 PART NUMBER INDEX C-8
C.4.3 FIGURE AND ITEM NUMBER INDEX C-9
C.5 HOW TO LOCATE REPAIR PARTS C-9
C.5.1 WHEN NATIONAL STOCK NUMBER OR PART NUMBER IS NOT KNOWN: C-9
C.5.2 WHEN NATIONAL STOCK NUMBER OR PART NUMBER IS KNOWN: C-9

SECTION II. PARTS LIST C-10

SECTION III. SPECIAL SUPPORT EQUIPMENT C-142

SECTION IV CROSS-REFERENCE INDEXES C-155

NATIONAL STOCK NUMBER INDEX C-156

FIGURE AND ITEM NUMBER INDEX C-178

PART NUMBER INDEX C-200

APPENDIX D OVERHAUL PROCEDURES D-1

SECTION I. GENERAL D-2

D.1 GENERAL D-2
D.1.1 SCOPE D-2
D.1.2 GENERAL INFORMATION D-2

SECTION II. TECHNICAL SUPPORT REQUIREMENTS D-3

D.2 TECHNICAL SUPPORT REQUIREMENTS D-3
D.2.1 FACILITIES D-3
D.2.2 TEST EQUIPMENT AND SPECIAL TOOLS D-3
D.2.3 MATERIAL REQUIRED D-3
D.2.4 FABRICATED TOOLS AND EQUIPMENT D-3
D.2.5 MANDATORY REPLACEMENT PARTS D-3
D.2.6 REPAIR PARTS D-4
D.2.7 MODIFICATIONS D-4

SECTION III. PRESHOP ANALYSIS D-5

D.3 PRESHOP ANALYSIS D-5
D.3.1 SCOPE D-5
D.3.2 CHECKING ATTACHED DOCUMENTS D-5
D.3.3 UNPACKING AND SPECIAL HANDLING D-6
D.3.4 EXTERNAL INSPECTION D-6
D.3.5 CLEANING AND PRESERVATION D-6
D.3.6 CORROSION. D-7
D.3.7 PRESHOP ANALYSIS D-7
D.3.8 PRESHOP ANALYSIS CHECKLIST D-7

SECTION IV. M94 CONVENTIONAL MUZZLE VELOCITY SYSTEM (MVS), P/N 12950994 ..... D-10

D.4 M94 CONVENTIONAL MUZZLE VELOCITY SYSTEM (MVS), P/N 12950994 ..... D-10
D.4.1 GENERAL D-10
D.4.2 TEST EQUIPMENT AND SPECIAL TOOLS REQUIRED D-10
D.4.3 MATERIALS REQUIRED D-11
D.4.4 CLEANING D-11
D.4.5 REPAIR D-11
D.4.6 PAINTING D-11
D.4.7 TESTING D-12

TABLE OF CONTENTS (CONT)

D.4.8 TROUBLESHOOTING D-23
D.4.9 DATA BASE REQUIREMENTS D-23
D.4.10 REPROGRAMMING D-23
D.4.11 FINAL TESTING BEFORE STORAGE D-23

SECTION V. CONTROL PROCESSOR AND DISPLAY UNIT (CPDU) ASSEMBLY, P/N AY6706709-0 ..... D-24

D.5 CONTROL PROCESSOR AND DISPLAY UNIT (CPDU) ASSEMBLY, P/NAY6706709-0. ..... D-24
D.5.1 GENERAL D-24
D.5.2 REPAIR AND MAINTENANCE D-24
D.5.3 TESTING AND TROUBLESHOOTING D-24
D.5.4 DATA BASE REQUIREMENTS D-25
D.5.5 REPROGRAMMING FOR STORAGE D-25
D.5.6 FINAL TESTING BEFORE STORING D-25

SECTION VI. POWER SUPPLY MODULE, P/N AY6706704-0 ..... D-26

D.6 POWER SUPPLY MODULE, P/N AY6706704-0 ..... D-26
D.6.1 GENERAL D-26
D.6.2 TEST EQUIPMENT AND SPECIAL TOOLS REQUIRED D-27
D.6.3 MATERIALS REQUIRED D-27
D.6.4 GENERAL REPAIR REQUIREMENTS. (REFER TO FIGURE D-7) D-28
D.6.5 POWER SUPPLY MODULE DISASSEMBLY D-29
D.6.6 CLEANING D-34
D.6.7 VISUAL INSPECTION (REFER TO FIGURE D-7) D-34
D.6.8 REPAIR D-34
D.6.9 PAINTING D-34
D.6.10 POWER SUPPLY MODULE REASSEMBLY D-34
D.6.11 TESTING D-35
D.6.12 TROUBLESHOOTING D-43
D.6.13 FINAL TESTING D-48

SECTION VII. MUZZLE VELOCITY PROCESSOR CIRCUIT CARD ASSEMBLY, P/N AY6706703-0 ..... D-49

D.7 MUZZLE VELOCITY PROCESSOR (MVP) CIRCUIT CARD ASSEMBLY (CCA), P/N AY6706703-0 ..... D-50
D.7.1 GENERAL D-50
D.7.2 TEST EQUIPMENT AND SPECIAL TOOLS REQUIRED D-50
D.7.3 MATERIALS REQUIRED D-50
D.7.4 GENERAL REPAIR REQUIREMENTS D-51
D.7.5 MVP CCA DISASSEMBLY D-52
D.7.6 CLEANING D-55
D.7.7 VISUAL INSPECTION D-55
D.7.8 REPAIR D-55
D.7.9 PAINTING D-55
D.7.10 MVP CCA REASSEMBLY D-55
D.7.11 TESTING D-56
D.7.12 TROUBLESHOOTING D-70
D.7.13 PREPROGRAMMED COMPONENTS PROGRAMMING PROCEDURE D-79
D.7.14 FINAL TESTING D-80

SECTION VIII. DISPLAY MODULE, P/N AY6706702-0 ..... D-81

D.8 DISPLAY MODULE, P/N AY6706702-0 ..... D-81
D.8.1 GENERAL D-81
D.8.2 TEST EQUIPMENT AND SPECIAL TOOLS REQUIRED D-81
D.8.3 MATERIALS REQUIRED D-82
D.8.4 GENERAL REPAIR REQUIREMENTS (REFER TO FIGURE D-17) D-82
D.8.5 DISPLAY MODULE DISASSEMBLY D-83
D.8.6 CLEANING D-87
D.8.7 VISUAL INSPECTION (REFER TO FIGURE D-17) D-87
D.8.8 REPAIR D-87
D.8.9 PAINTING D-87
D.8.10 DISPLAY MODULE REASSEMBLY D-87
D.8.11 TESTING AND TROUBLESHOOTING D-88

SECTION IX. TRANSCEIVER ASSEMBLY, P/NS AY6706571-0 AND AY6706571-2 ..... D-89

D.9 TRANSCEIVER ASSEMBLY, P/N'S AY6706571-0 AND AY6706571-2 ..... D-89
D.9.1 GENERAL D-89
D.9.2 TEST EQUIPMENT AND SPECIAL TOOLS REQUIRED D-90
D.9.3 MATERIALS REQUIRED D-91
D.9.4 GENERAL REPAIR REQUIREMENTS D-91
D.9.5 TRANSCEIVER ASSEMBLY DISASSEMBLY D-93
D.9.6 CLEANING D-102
D.9.7 VISUAL INSPECTION D-102
D.9.8 REPAIR D-102
D.9.9 PAINTING D-103
D.9.10 TRANSCEIVER ASSEMBLY REASSEMBLY D-103
D.9.11 TESTING D-105
D.9.12 TROUBLESHOOTING. D-117
D.9.13 FINAL TESTING D-121

SECTION X. MICROWAVE TEST EQUIPMENT, DESCRIPTION AND CALIBRATION D-122

D.10 MICROWAVE TEST EQUIPMENT, DESCRIPTION AND CALIBRATION D-122
D.10.1 GENERAL D-122
D.10.2 OPERATION DESCRIPTION D-122
D.10.3 TEST EQUIPMENT CALIBRATION D-127

APPENDIX E GLOSSARY E-1

E.1 ABBREVIATIONS AND ACRONYMS. E-1
E.2 SPECIAL TERMS. E-6

APPENDIX F EXPENDABLE AND DURABLE ITEMS LIST F-1

SECTION I. INTRODUCTION F-1

F.1 SCOPE F-1
F.2 EXPLANATION OF COLUMNS F-1

TABLE OF CONTENTS (CONT)

APPENDIXG U. S. MARINE CORPS MODIFICATION INSTRUCTION INSTALLING THE M90/GDU POWER CABLE MODIFICATION KIT MUZZLE VELOCITY SYSTEM (MVS) G-1

G.1 PURPOSE G-1
G.2 TIME COMPLIANCE G-1
G.3 INFORMATION G-2
G.4 MAJOR ITEM AFFECTED G-2
G.5 COMPONENT AFFECTED G-2
G.6 MATERIAL AFFECTED G-2
G.7 SUPPLY ACTION G-3
G.8 SKILL AND TIME REQUIRED G-3
G.9 SPECIAL TOOLS G-3
G.10 MODIFICATION PROCEDURE G-4
G.11 INSPECTION G-7
G.12 RECORDING AND REPORTING THE MODIFICATION G-7

APPENDIX H MCA MANUAL AND OVERHAUL INSTRUCTIONS H-1

FOREWORD H-3
H.1 FOREWORD H-3
H.1.1 PURPOSE OF THIS MANUAL H-3
H.1.2 USE OF THIS MANUAL H-4
H.1.3 RELATED PUBLICATIONS H-4
H.1.4 COMMON TOOLS AND EQUIPMENT H-4
H.1.5 SPECIAL TOOLS AND SUPPORT EQUIPMENT H-4
H.1.6 TEST, MEASUREMENT AND DIAGNOSTIC EQUIPMENT (TMDE) H-4
H.1.7 REPAIR PARTS H-4

CHAPTER 1 GENERAL INFORMATION AND SYSTEM DESCRIPTION H-5

SECTION I GENERAL INFORMATION H-7

H.2 GENERAL INFORMATION H-7
H.2.1 SCOPE H-7
H.2.2 STANDARDS AND PROCEDURES H-7
H.2.3 EQUIPMENT NAME AND PART NUMBER H-7
H.2.4 PURPOSE OF EQUIPMENT H-7

SECTION II EQUIPMENT DESCRIPTION H-10

H.3 EQUIPMENT DESCRIPTION H-10
H.3.1 EQUIPMENT FEATURES H-10
H.3.2 DATA BASE H-10
H.3.3 PHYSICAL CHARACTERISTICS H-10
H.3.4 POWER REQUIREMENTS H-11
H.3.5 ENVIRONMENTAL INFORMATION H-11
H.3.6 PRINCIPLE OF OPERATION H-11
H.3.7 SYSTEM INTERCONNECTIONS H-11

SECTION III COMPONENT DESCRIPTION H-14

H.4 COMPONENT DESCRIPTION H-14
H.4.1 MCA H-14

CHAPTER 2 MAINTENANCE INSTRUCTIONS H-21

SECTION I MAINTENANCE INSTRUCTIONS H-22

H.5 GENERAL INSTRUCTION H-22
H.5.1 GENERAL H-22

SECTION II MCA ASSEMBLY H-26

H.5.2 MCA ASSEMBLY H-26

SECTION III EMI FILTER ASSEMBLY, P/N AY20412144 ..... H-35

H.6 EMI FILTER ASSEMBLY, P/N AY20412144 ..... H-35
H.6.1 GENERAL H-35
H.6.2 TEST EQUIPMENT AND SPECIAL TOOLS REQUIRED H-35
H.6.3 MATERIAL REQUIRED H-35
H.6.4 GENERAL REPAIR REQUIREMENTS H-36
H.6.5 REMOVAL (REFER TO FIGURE H-11) H-36
H.6.6 INSTALLATION (REFER TO FIGURE H-11) H-37
H.6.7 INSPECTION H-37
H.6.8 FAULT ISOLATION H-40

SECTION IV SWITCH ASSEMBLY, P/N AY20412557 ..... H-43

H.7 SWITCH ASSEMBLY, P/N AY20412557 ..... H-43
H.7.1 GENERAL H-43
H.7.2 TEST EQUIPMENT AND SPECIAL TOOLS REQUIRED H-43
H.7.3 GENERAL REPAIR REQUIREMENTS H-44
H.7.4 REMOVAL (REFER TO FIGURE H-11) H-44
H.7.5 INSTALLATION (REFER TO FIGURE H-11) H-44
H.7.6 INSPECTION H-44
H.7.7 FAULT ISOLATION H-46

SECTION V MCA - MVS CABLE, P/N WA20410634 ..... H-47

H.8 MCA - MVS CABLE, P/N WA20410634 ..... H-47
H.8.1 GENERAL H-47
H.8.2 TEST EQUIPMENT AND SPECIAL TOOLS REQUIRED H-47
H.8.3 MATERIAL REQUIRED H-47
H.8.4 GENERAL REPAIR REQUIREMENTS H-48
H.8.5 INSPECTION H-49
H.8.6 CONTINUITY TEST H-49

SECTION VI MCA CCA CABLE, P/N WA20412122 ..... H-52

H.9 SECTION VII. MCA CCA CABLE, P/N WA20412122 ..... H-52
H.9.1 GENERAL H-52
H.9.2 TEST EQUIPMENT AND SPECIAL TOOLS REQUIRED H-52
H.9.3 MATERIAL REQUIRED H-52
H.9.4 GENERAL REPAIR REQUIREMENTS (REFER TO FIGURE H-16) H-53
H.9.5 INSPECTION H-54
H.9.6 CONTINUITY TEST H-54

TABLE OF CONTENTS (CONT)

CHAPTER 3 DATA BASE EDITOR H-57

H.10 DATA BASE EDTOR H-57
H.10.1 GENERAL H-57
H.10.2 APPLICABLE DOCUMENTS H-58
H.10.3 OPERATING INSTRUCTIONS H-58

CHAPTER 4 REPROGRAMMING H-71

H.11 REPROGRAMMING H-71
H.11.1 GENERAL H-71
H.11.2 REPROGRAMMING H-71

CHAPTER 5 PREPARATION FOR SHIPMENT AND STORAGE H-75

H.12 PREPARATION FOR SHIPMENT AND STORAGE H-75
H.12.1 GENERAL H-75
H.12.2 PACKING H-75
H.12.3 SHIPMENT IN CRATES H-77
H.12.4 STORAGE H-77

SECTION I INTRODUCTION H-81

CHAPTER 6 OVERHAUL PROCEDURES H-106

SECTION I GENERAL H-106

H.13 OVERHAUL PROCEDURES H-106
H.13.1 GENERAL H-106

SECTION II CPU, CIRCUIT CARD ASSEMBLY H-107

H.14 CPU, CIRCUIT CARD ASSEMBLY H-107
H.14.1 GENERAL H-107

CHAPTER 7 GLOSSARY H-121

H.15 GLOSSARY H-121
H.15.1 ACRONYMS H-121

CHAPTER 8 FOLDOUT DIAGRAMS H-125

H.16 FOLDOUT DIAGRAMS H-125

CHAPTER 1

GENERAL INFORMATION AND SYSTEM DESCRIPTION

CHAPTER CONTENTS

		Page
SECTION I.	GENERAL INFORMATION	1-1
SECTION II.	EQUIPMENT DESCRIPTION	1-9
SECTION III.	COMPONENT DESCRIPTION	1-20

SECTION I. GENERAL INFORMATION

SECTION CONTENTS

Subject		Page
1.1	SCOPE	1-2
1.2	EQUIPMENT NAME AND PART NUMBERS	1-2
1.3	PURPOSE OF EQUIPMENT	1-3
1.4	MAINTENANCE FORMS AND PROCEDURES	1-3
1.5	SAFETY, CARE, AND HANDLING	1-3
1.5.1	ELECTROSTATIC DISCHARGE (ESD) AWARENESS	1-3
1.5.2	TYPICAL PRIME CHARGE SOURCES	1-4
1.5.3	PRIME CHARGE CARRIERS	1-4
1.5.4	ITEMS TO AVOID	1-5
1.5.5	HANDLING UNPACKAGED ESD SENSITIVE ITEMS	1-5
1.5.6	PACKAGING AND LABELING ESD SENSITIVE ITEMS/ASSEMBLIES	1-5
1.5.7	TYPES OF ESD SENSITIVE DEVICES	1-5
1.5.8	ARMY ADOPTED CONFIGURATION	1-6
1.5.9	PRECAUTIONS WITHIN 20-FOOT (6-METER) DISTANCE	1-6

1.5.10 PRECAUTIONS WITHIN 50-FOOT (15-METER) DISTANCE 1-6
1.5.11 CHAIRS 1-6
1.6 CORROSION PREVENTION AND CONTROL 1-6
1.6.1 U.S. ARMY PROCEDURES 1-6
1.6.2 U.S. MARINE CORPS PROCEDURES 1-7
1.7 DESTRUCTION OF ARMY MATERIEL TO PREVENT ENEMY USE 1-7
1.8 DECONTAMINATION OF COMPONENTS 1-7
1.9 REPORTING EQUIPMENT IMPROVEMENT RECOMMENDATIONS (EIR) 1-7
1.9.1 U.S. ARMY PROCEDURES 1-7
1.9.2 U.S. MARINE CORPS PROCEDURES 1-8

1.1 SCOPE

This manual provides operation and maintenance instructions for the M94 Conventional Muzzle Velocity System (MVS) and for the MVS Communication Adapter (MCA).

1.2 EQUIPMENT NAME AND PART NUMBERS

Equipment names, part numbers, and military nomenclature are provided in Table 1-1.

Table 1-1. M94 Equipment Name and Part Numbers

Component	Part Number	Military Nomenclature
Control Processor and Display Unit	AY6706709-0	Control Processor Display Unit
Transceiver Assembly	AY6706571-0, AY6706571-2	Antenna Transceiver Assembly
Doppler Simulator	AY6706690-0	Radar Doppler Simulator Test Unit
Interconnection Cable, 30-Meter (on drum)	WA6706719-0	Special Interconnection Cable Assembly, 30-Meter (on drum)
Power Cable, 50-Meter (on drum)	WA6706717-0	Power Cable, 50-Meter (on drum)

Table 1-1. M94 Equipment Name and Part Numbers (Cont)

Component	Part Number	Military Nomenclature
Secondary Power Source Cable	WA6708023-0	Power Source Cable
Cable Drum	AM6707950-0	Cable Drum
Power Adapter	WA6706718-0	Power Adapter
Secondary Power Source	BA-5590/U	Lithium Battery (secondary power source)
Mounting Bracket	12922098	Mounting Bracket Assembly
System Transit Case	AM6706714-0	System Transit Case
MVS Communication Adapter *	AY20412152	Muzzle velocity system Communication Adapter (MCA)
MCA - CCA Cable *	WA20412122	MCA - CCA Cable
MCA - MVS Cable *	WA20410634	MCA - MVS Cable
MCA Carrying Case *	PK20412315	MCA Carrying Case
* All marked items are products related to the MCA. For the MCA manual refer to Appendix H		

1.3 PURPOSE OF EQUIPMENT

The purpose of the M94 MVS (Figure 1-1) is to provide an accurate muzzle velocity reading for a projectile fired from a gun and to provide data for adjustment of the gun elevation after several rounds have been fired. The M94 MVS provides advanced muzzle velocity and gun management functions which enable the operator to store and retrieve adjusted muzzle velocities for the rounds fired for all gun types/projectiles/propellants combinations in use. This information can be used to provide a reasonable estimate of the average muzzle velocity for rounds to be fired for a new mission, thereby improving the probability of a first- round hit on target during future engagements. The M94 MVS is designed to communicate digitally (not voice) with external devices (fire control computers) to automatically provide these devices with the measured, average, and adjusted muzzle velocities.

1.4 MAINTENANCE FORMS AND PROCEDURES

Department of the Army forms and procedures used for equipment maintenance will be those prescribed by DA PAM 738-750, the Army Maintenance Management System (TAMMS), as contained in the Maintenance Management Update. Marine Corps personnel will use TM 4700-15/1 (Equipment Record Procedures). A listing of maintenance forms is provided in Appendix A.

1.5 SAFETY, CARE, AND HANDLING

1.5.1 Electrostatic Discharge (ESD) Awareness

It is essential to understand the nature of electrostatic discharge (ESD), what causes it, and the problems it can cause. This paragraph contains information on the areas of major concern. Marine Corps personnel shall refer to TM 9999-15/1 and TM 9999-15/2 for ESD awareness.

1.5.2 Typical Prime Charge Sources

Means of generating electrostatic charges (voltage) and their relationship to relative humidity are shown in Table 1-2.

Table 1-2. Means of Static Charge Generation

Means of Static Generation	Electrostatic Voltages- 10-20 Percent Relative Humidity	Electrostatic Voltages- 65-90 Percent Relative Humidity
Walking across carpet	35,000	1,500
Walking on vinyl floor	12,000	250
Worker at workbench	6,000	100
Vinyl envelopes for work instructions	7,000	600
Common poly bag picked up from bench	20,000	1,200
Work chair padded with polyurethane foam	18,000	1,500

1.5.3 Prime Charge Carriers

Personnel are the prime charge carriers with the greatest potential of damaging ESD items. Activities such as walking, working at a table or bench, sliding on a chair, or simply combing one's hair can generate static charges of thousands of volts with high potential for damage to sensitive devices.

1.5.4 Items to Avoid

The following items will generate sufficient charges to damage sensitive items: all common plastics, spray cans, tape dispensers, heating guns, bubble packs, polystyrene cups, cigarette papers and wrappers, paint cans, stencil ink applicators, common poly bags and sheets, and plastic tape.

1.5.5 Handling Unpackaged ESD Sensitive Items

Never store or transport ESD sensitive components or assemblies outside of the protective packaging. The protective packaging should not be opened or removed until the item is to be installed in the next higher assembly. At this time, the technician should be grounded in an approved work station. Avoid touching bare leads and contacts on sensitive material. Never use plastic solder suckers to remove soldered components from ESD sensitive assemblies. Use metallic or antistatic solder removal means.

1.5.6 Packaging and Labeling ESD Sensitive Items/Assemblies

After replacement of a sensitive circuit card assembly (CCA) or other subassembly into an instrument, the CCA that is to be returned for repair must be repackaged in ESD protective material to prevent further damage from handling and transit. For field returns, antistatic ziplock bags are available for CCAs and other small assemblies. The container with the ESD sensitive material warning label should also be used for returning defective material to ensure proper handling during shipment.

1.5.7 Types of ESD Sensitive Devices

ESD sensitive devices and information pertaining to susceptibility are listed in Table 1-3.

Table 1-3. Device Type and Range of ESD Susceptibility (Volts)

Device Type	Range of Susceptibility (Volts)
VMOS	30 to 1800
MOSFET	100 to 200
GaAsFET	100 to 300
EPROM	100
JFET	140 to 7000
SAW	150 to 500
OP AMP	190 to 2500
CMOS	250 to 3000
Schottky Diodes	300 to 2500
Film Resistors	300 to 3000
Bipolar Transistors	380 to 7000
ECL (PC Board Level)	500 to 1500
SCR	680 to 1000
Schotky TTL	1000 to 2500

1.5.8 Army Adopted Configuration

In general, a protective workstation must occupy a 10-foot (3-meter) square area and be cordoned off with yellow lines or other means of segregation. The area should be posted with signs identifying it as a static-free work area. This protective station may be used for packaging or by maintenance personnel for repairing sensitive devices, but not when applying power to the instrument for testing.

1.5.9 Precautions within 20-foot (6-meter) Distance

For purposes of initially established work- sites, the major controlled area shall be considered as that area within a 20-foot (6-meter) radius of the bench(es). Within this controlled area, the following should be excluded:

a. Materials handling trucks, carts, and equipment.

b. Conveyor drive mechanisms and moving belts.

c. Sandblast and air-cleaning equipment.

d. Paint spray booths and ventilating equipment.

e. Storage of bulk common plastic materials such as large rolls of cushion wrapping material, loose fills, slab cushioning, or fast packs.

1.5.10 Precautions within 50-foot (15-meter) Distance

A special hazard exists in areas where stretch and shrink wrapping operations are performed. This is also true where skin packaging, foam- in-place, and plastic bagging are conducted. These types of functions must be kept at least 50 feet (15 meters) away from static-protected worksites.

1.5.11 Chairs

Chairs are generally not recommended within the protected areas. If used, due to physical impairment of personnel, they must be of conductive construction, making good electrical contact with the grounded floor material, and must have conductive seat covers.

1.6 CORROSION PREVENTION AND CONTROL

While corrosion is typically associated with rusting of metals, it can also include deterioration of other materials, such as rubber and plastic. Unusual cracking, softening, swelling, or breaking of the materials may be a corrosion problem. If a corrosion problem is identified, it should be reported using Standard Form 368, Product Quality Deficiency Report. Use of keywords such as “corrosion”, “rust”, “deterioration”, or “cracking” will ensure that the information is identified as a CPC problem.

1.6.1 U.S. Army Procedures

Army users submit Product Quality Deficiency Report (SF 368) to:

Director, TACOM-RI
Attn.: AMSTA-LC-QAS (Customer Feedback Center)
Rock Island, Illinois 61299-7630

1.6.2 U.S. Marine Corps Procedures

Marine Corps users submit Product Quality Deficiency Report (SF 368), in accordance with MCO4855.10 and TM 4700-15/1 to:

Commander
Marine Corps Logistics Base
Attn.: Code 808-1
814 Radford Boulevard
Albany, Georgia 31704-1128

1.7 DESTRUCTION OF ARMY MATERIEL TO PREVENT ENEMY USE

Only the commanding officer can give the order to destroy materiel to prevent enemy use. Refer to TM 750-244-6.

1.8 DECONTAMINATION OF COMPONENTS

The components of the M94 MVS have been coated with a chemical agent resistant coating (CARC) to aid you in the decontamination (deliberate removal of a chemical agent hazard) by one or a combination of chemical treatments, evaporating with hot air absorbents, or other methods. There are two levels of decontamination.

a. Partial - just enough contamination is removed or neutralized to allow soldiers to sustain operation.

b. Complete - When contamination is reduced to a level that permits soldiers to operate for extended periods without wearing protective clothing; e.g., mask, gloves.

The application of CARC has improved the efficiency by which the decontamination process can be accomplished. Therefore, it is important that you maintain this coating through the proper application of paint which contains CARC properties whenever you apply paint. For additional information and instructions pertaining to nuclear, biological, and chemical (NBC) decontamination, refer to FM 3-5 (NBC Decontamination). Complete instructions regarding the application of CARC are provided in TM 43-0139 (Painting Instructions for Army Materiel).

1.9 REPORTING EQUIPMENT IMPROVEMENT RECOMMENDATIONS (EIR)

1.9.1 U.S. Army Procedures

If your M94 MVS needs improvement, let us know. Send us an EIR. You, the user are the only one who can tell us what you don't like about your equipment. Let us know why you don't like the design or performance. Put it on an SF 368 (Product Quality Deficiency Report) and mail it to:

Director, U. S. Army Armament and Chemical Acquisition and
Logistics Activity
Attn.: AMSTA-AC-QAD
Rock Island, Illinois 61299-7630

1.9.2 U.S. Marine Corps Procedures

If your M94 MVS has a defect or nonconforming condition, which limits or prohibits the item from fulfilling its intended purpose, submit a Product Quality Deficiency Report in accordance with TM 4700-15/1, Equipment Record Procedures. If your M94 MVS needs improvement, which relates directly to savings in man-hours, materials, supplies, equipment, money, or increased effectiveness in carrying out the programs or missions of your Command, submit a Beneficial Suggestion (refer to MCO1650.17). If your M94 MVS has been damaged during shipment, if shipment is incomplete, if incorrect spare or repair parts are received, or if incorrect quantity is received, submit a Report of Discrepancy (SF 364) (refer to MCO4430.3). Refer to TM 4700-15/1 for all procedures relating to maintenance forms, records, and reports.

SECTION II. EQUIPMENT DESCRIPTION

SECTION CONTENTS

Subject		Page
1.10	EQUIPMENT FEATURES	1-9
1.11	EQUIPMENT PERFORMANCE	1-10
1.12	PHYSICAL CHARACTERISTICS	1-12
1.13	POWER REQUIREMENTS	1-13
1.14	ENVIRONMENTAL INFORMATION	1-13
1.15	PRINCIPLES OF OPERATION	1-13
1.16	MUZZLE VELOCITY MEASUREMENT AND CALCULATION	1-14
1.17	SYSTEM INTERCONNECTION	1-14

1.10 EQUIPMENT FEATURES

MV Measurement:.....The M94 MVS accurately measures the muzzle velocity (MV) for gun type, projectile, propellant, zone, and lot combinations in use by the U.S. Army and Marine Corps.

MV Normalization:.....The M94 MVS normalizes average muzzle velocities to standard projectile weight and propellant temperature.

Gun Types:.....The M94 MVS is programmed to handle all guns presently in use.

Ammunition: .....The M94 MVS is programmed to handle all projectile and propellant combinations which are valid for each particular gun type.

Field Reprogrammability: .....The M94 MVS is field reprogrammable through its serial communication link to handle new gun and ammunition types.

Storage Capacity: .....The M94 MVS stores adjusted muzzle velocity variations for up to 1000 different gun, projectile, propellant, propellant lot, and charge combinations.

Operator Interface:.....The M94 MVS is menu-driven to aid the operator in accessing all system functions quickly and conveniently.

Self-Test: ..... The M94 MVS has extensive built-in tests (BIT) which run upon startup or operator initiation to detect system malfunctions.

Exporting Information ..... The M94 MVS can export all of its recorded, adjusted muzzle velocity information through its serial digital communications link to an external device.

Remote Control: ..... The M94 MVS can be completely controlled by an external device through its serial communications link without operator intervention. Each and every function and display available via the keyboard and display can be initiated and accessed by remote control.

Displayed Information: ..... The M94 MVS displays the measured muzzle velocity, average muzzle velocity, number of rounds fired for calculation of averages, and MV variation between the standard and adjusted MV.

1.11 EQUIPMENT PERFORMANCE

General

Velocity Measuring Range: ..... 150 - 1500 meters/second

Caliber Range: ..... 40 mm and larger

Projectile Types: ..... Conventional, base-bleed, sabot-discarding, rocket-assisted, tracer ammunition, deep cavity

Accuracy: ..... Within 0.05% of the true muzzle velocity

Firing Rate: ..... 16 rounds per minute maximum

Firing Detection: ..... Automatic triggering

Measuring (Transmitting) Duration: ..... 500 msec

MV Calculation Duration: ..... 3.25 sec maximum

Flank Firing: ..... No mutual interferences when two systems operate on parallel guns, 30 meters (117 feet) apart.

Remote Data link: ..... RS-232 Interface
Baud rate – 9600
Start bit – 1
Stop bit – 1
Data bits – 8
Parity - None

Mission Management

Types of guns: ..... Any type in use (M109A2, M119A1, M198, etc.)

Storage: ..... Related to howitzer number and tube serial number

Projectiles: ..... Any type related to type of gun

Propellants: ..... Any type and charge related to selected projectile

Data Base

Standard MV: .....All types as defined in Tabular Firing Tables

Muzzle Velocity Variation (MVV): .....Up to 1000 related to howitzer number, projectile type, propellant type, charge, and lot combination

Average MV: .....Average of 3 to 99 measured MVs within 3 m/sec

Normalization: .....To standard projectile weight and propellant temperature for all types of ammunition

Reprogrammability: .....Field reprogrammable for new types of guns and ammunition combinations

Memory Retention: .....All vital data is stored in nonvolatile memory

CPDU Display

Type: .....Alphanumeric LCD, 4 lines x 40 characters

Backlight Illumination: .....Electro-Luminescent (EL) lamp (for poor light conditions)

Heating: .....Thermophil heater for LCD operation below 10° C

Contrast Ratio: >1.4

Viewing Angle: >20° (operator adjustable)

Muzzle Velocity Display Resolution: 0.1m/sec

Data Entry

Type: .....20-key functional flat keyboard (4x5 keys)

Backlight Illumination: .....Incandescent lamps (for poor light conditions)

Actuating Force: .....0.66 lb (360 gr) IAW MIL-STD-1472

Key Size: .....0.75 inch (center-to-center) IAW MIL-STD-1472

Transceiver

Transmitted Frequency: .....10,525±1 MHz

Transmitted Power: .....120 to 240 mΩ

Antenna

Type: .....Microstrip

Gain: .....22 db minimum

Side Lobe Level: .....-12 db minimum below main lobe

Beamwidth: .....E-PLANE: 15°±2°
H-PLANE: 7° ±2°

Cross Polarization: .....-24 db maximum

Squint Angle: .....E-PLANE: 0±1°
H-PLANE: 7±1°

Doppler Simulator

Power: .....1.5 VDC D-size batteries (2)

Simulated MV: .....712 ±50 m/sec

Secondary Power Source

Type: .....Lithium non-rechargeable

Voltage: .....20-29.5 VDC

Capacity: .....10 Ah

Operating Time: .....8 hours minimum (80% standby, 20% measure mode)

1.12 PHYSICAL CHARACTERISTICS

CPDU

Size (H x W x D):.....8.35 x 10.6 x 4.3 inch (212 x 269 x 109 mm)

Weight: .....11 lb (5 Kg)

Transceiver

Size (H x W x D):.....12 x 8.4 x 3.8 inch (304 x 214 x 96 mm)

Weight: .....14.3 lb (6.5 Kg)

Doppler Simulator

Size (L x D): .....8.4 x 2.0 inch (212 x 51 mm)

Weight: .....1 lb (0.5 Kg)

Secondary Power Source

Size (H x W x D):.....5 x 4.4 x 2.45 inch (127 x 112 x 62 mm)

Weight: .....2.5 lb (1.14 Kg)

Cable Length

Interconnecting (on drum):.....33 yd (30 m)

Power (on drum): .....55 yd (50 m)

Secondary Power Source .....2.2 yd (2 m)

Cable Weight

Interconnecting (on drum):.....21.2 lb (9.6 Kg)

Power (on drum): .....21.2 lb (9.6 Kg)

Secondary Power Source:.....1.4 lb (0.64 Kg)

Transceiver Mounting Bracket

Size (H x W x D):.....8.3 x 7.4 x 6.6 inch (210 x 187 x 167 mm)

Weight: .....7.9 lb (3.6 Kg)

Transit Case

Size (H x W x D):.....19.0 x 22.7 x 23.7 inch (480 x 580 x 600 mm)

Weight (Empty): .....40 lb (18 Kg)

Color:.....Green (383)

1.13 POWER REQUIREMENTS

Operating Voltage: .....18-30 VDC

Power Consumption:.....18 W in standby mode, 27 W in measure mode

Control Processor Display Unit

Operating Voltage: .....18-30 VDC

Power Consumption:.....15 W

Transceiver

Operating Voltage: .....28 VDC (supplied by CPDU)

Power Consumption:.....3 W in standby mode, 12 W in measure mode

1.14 ENVIRONMENTAL INFORMATION

The M94 MVS is designed to withstand adverse conditions which may be present during storage and operation. The M94 MVS will function properly without degradation under the following conditions:

a. Operation temperatures from –50° to +125°F
b. Storage temperatures from –50° to +150°F
c. Relative humidity 0-95% (including condensation)
d. Shocks and vibrations present during gunfire and transport
e. High altitude during air transport
f. Rain and wind
g. Sand and dust
h. Solar radiation (direct sunlight)
i. Salt fog
j. Environments leading to growth of fungus

1.15 PRINCIPLES OF OPERAT ION

The M94 MVS Transceiver is a compact transmitter-receiver that generates a Doppler signal related to the velocity of projectiles fired from the gun on which the transceiver is mounted.

The gun firing is detected by an automatic triggering device (accelerometer) which starts the measuring process (transmits RF energy). The transceiver transmits RF energy only when the system is in the measure mode. The system transmits a low-power signal in the X band range. The echo frequency returned from the projectile is shifted in frequency relative to projectile velocity. This frequency undergoes mixing with the transmitted frequency in order to achieve a Doppler frequency:

$$F_d = F_t - F_r = \frac{2F_t}{C} V$$

Where:

F_r - frequency received by antenna

F_t - frequency transmitted by antenna

C - speed of light

V - projectile velocity relative to gun

F_d - Doppler frequency

Projectile velocities between 150-1500 m/sec will generate a Doppler frequency between 10-104 kHz. This frequency is sampled and processed in order to derive the projectile's muzzle velocity. Using the Doppler effect and fast fourier transform algorithm (FFTA), the projectile instantaneous velocity is measured at up to 64 predefined in-flight intervals. This data is sorted by statistical methods to calculate the best fit regression curve and used to extrapolate the projectile velocity upon exiting the gun tube.

1.16 MUZZLE VELOCITY MEASUREMENT AND CALCULATION

The MVP starts the Doppler sampling process when triggered by a signal received from the transceiver. This instant is referred as t = 0. The Doppler signal is then processed to obtain the projectile's velocity at several predefined instances. The required muzzle velocity is the projectile speed at t = 0, the instant where the projectile leaves the muzzle end, V(t = 0). This value can be calculated by finding the best-fit linear regression curve of the form:

$$V(t) = at + b$$

Where:

t - Time in seconds

V(t) - Instantaneous velocity

a, b - Linear regression constants

The MVP employs a highly advanced signal processing algorithm implemented on a modern digital signal processor (DSP). This DSP is extremely fast and is capable of performing computational intensive and highly sophisticated computing algorithms which are based on the FFTA.

1.17 SYSTEM INTERCONNECTION

The system interconnection is shown in Figure 1-2. The transceiver is mounted on the existing bracket on the gun and connected to the Control Processor Display Unit (CPDU) (connector J3) through the interconnecting cable. The CPDU is connected (connector J1) to the vehicle power source through the power cable and power adapter. When vehicle power is not available, an optional secondary power source can be used. Refer to paragraph 1.24 for description of secondary power source. An optional communication cable (connected to connector J2 of CPDU) can be used for connection to an automatic fire control system or to any other external computer.

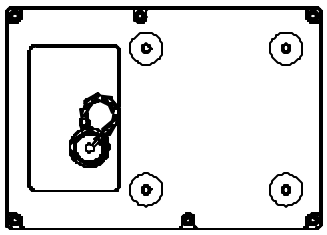

TRANSCEIVER
(REAR VIEW)

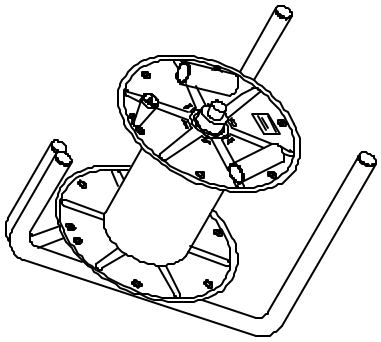

CABLE DRUM (2)

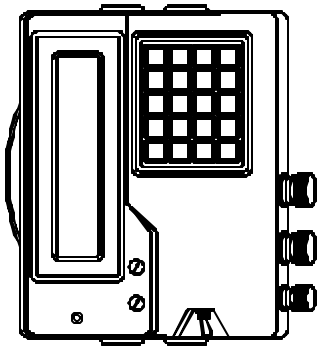

CONTROL PROCESSOR AND
DISPLAY UNIT

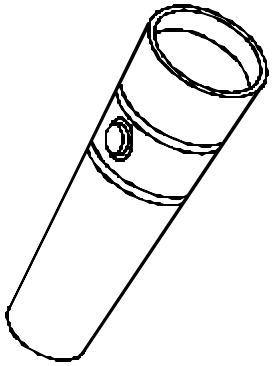

DOPPLER SIMULATOR

Figure 1-1. M94 MVS Components (Sheet 1 of 4)

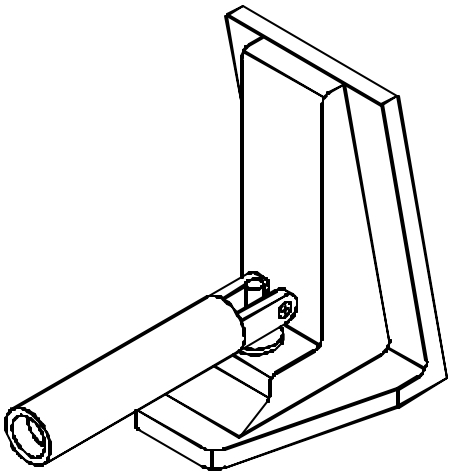

TRANSCEIVER MOUNTING BRACKET

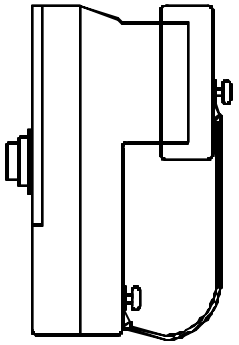

POWER ADAPTER

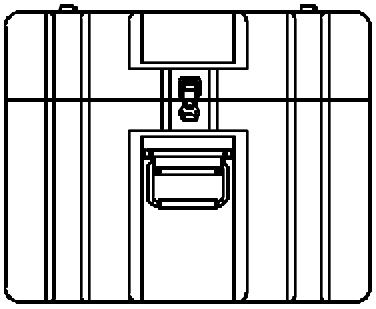

SYSTEM TRANSIT CASE

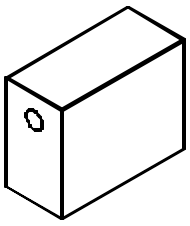

SECONDARY POWER SOURCE

Figure 1-1. M94 MVS Components (Sheet 2 of 4)

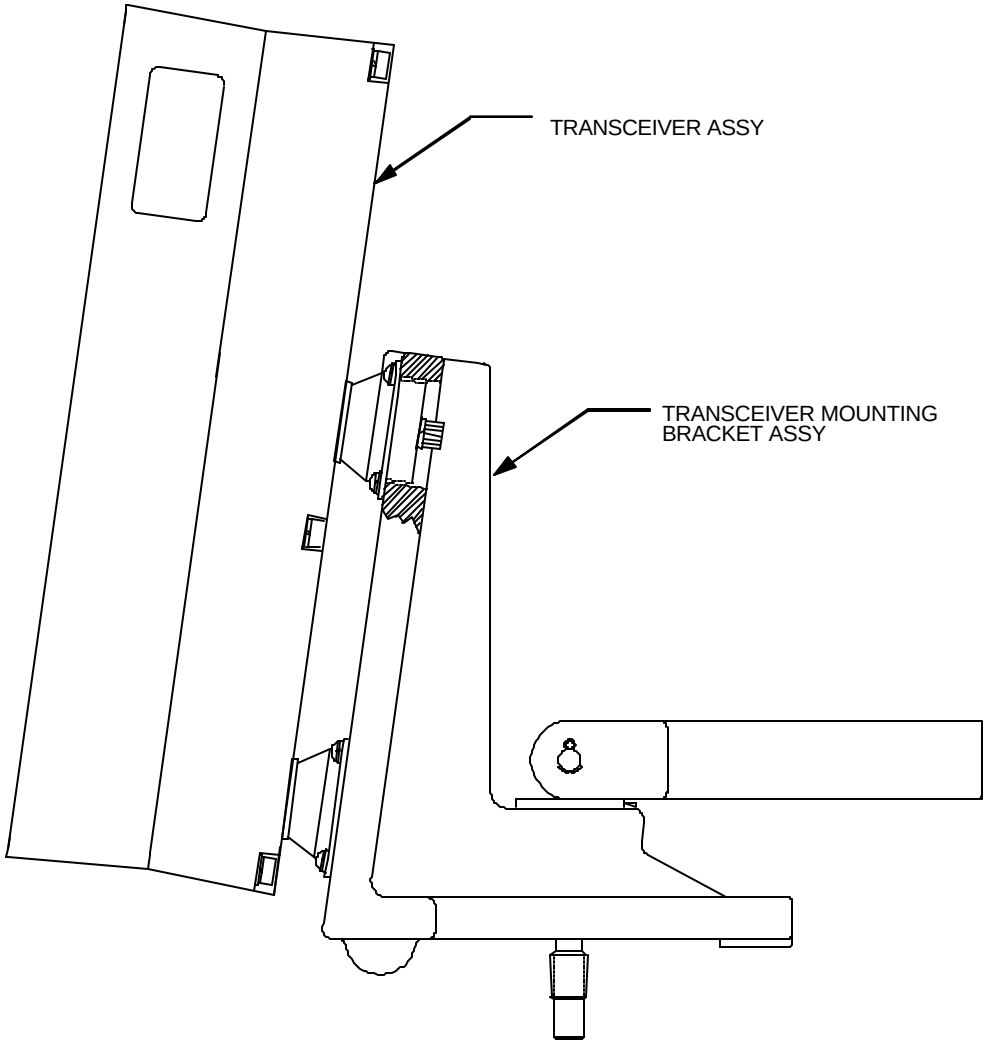

TRANSCEIVER AND BRACKET INSTALLATION
(SHOWN IN NORMAL OPERATION CONDITION)

Figure 1-1. M94 MVS Components (Sheet 3 of 4)

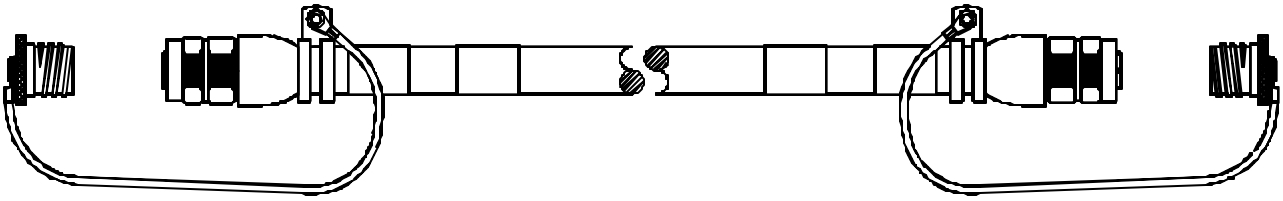

INTERCONNECTION CABLE (30-METER)

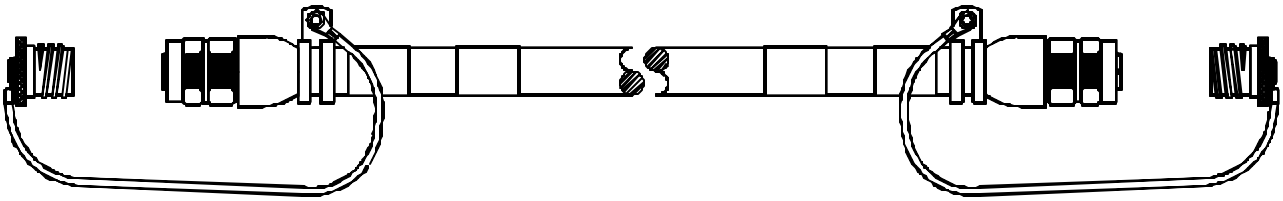

POWER CABLE (50-METER)

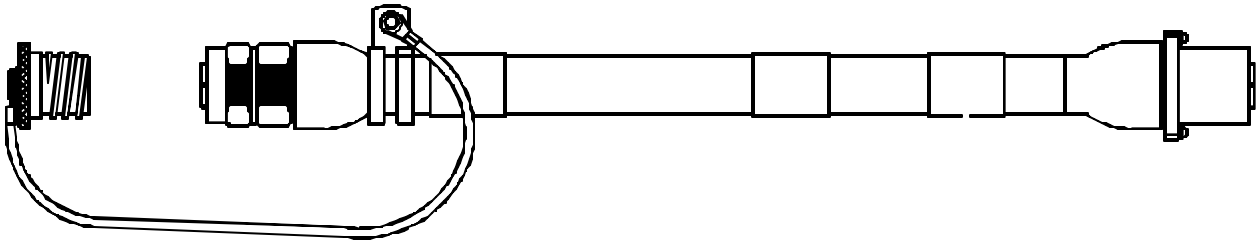

SECONDARY POWER SOURCE CABLE

Figure 1-1. M94 MVS Components (Sheet 4 of 4)

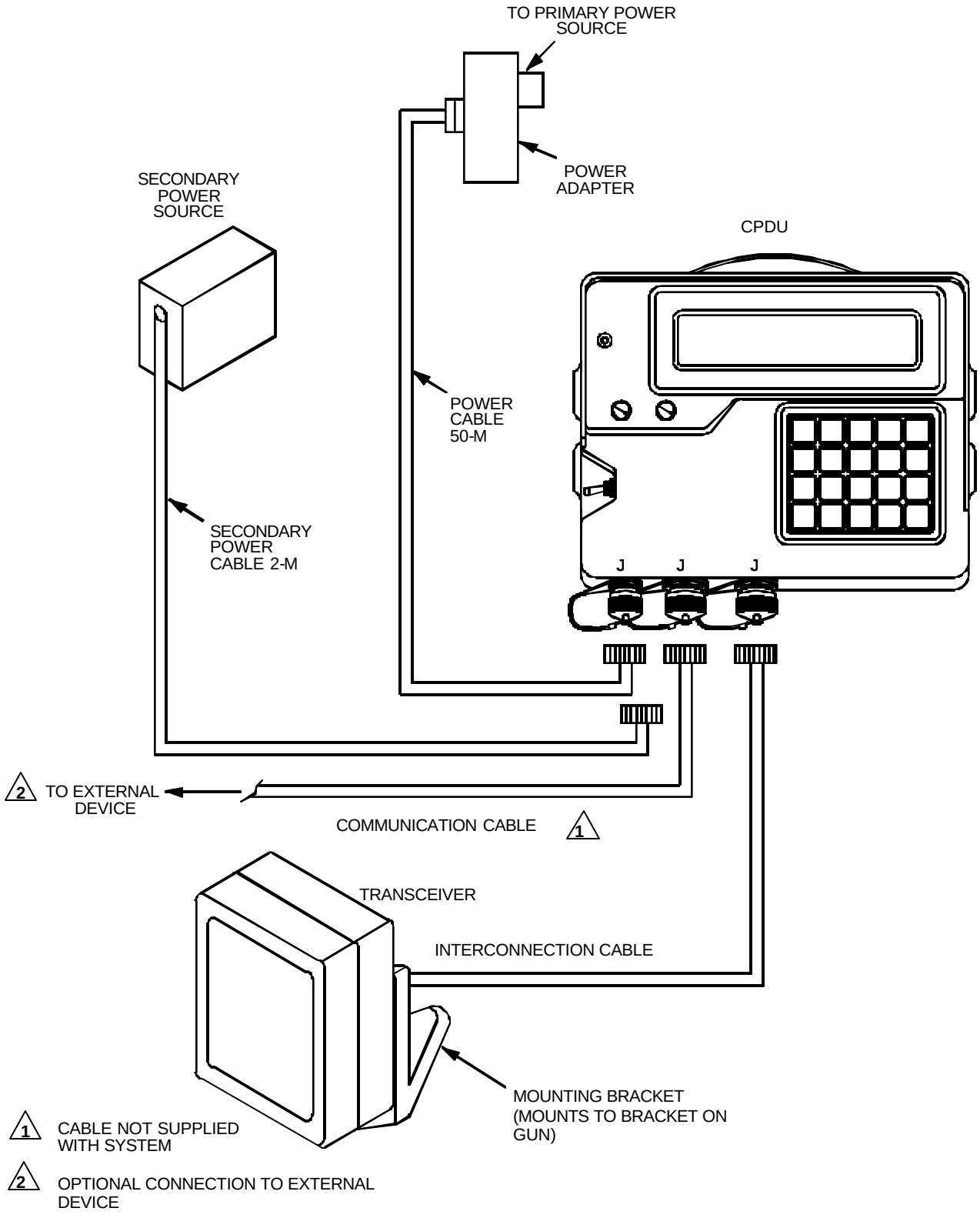

Figure 1-2. M94 MVS Interconnection

SECTION III. COMPONENT DESCRIPTION

SECTION CONTENTS

Subject		Page
1.18	CONTROL PROCESSOR AND DISPLAY UNIT (CPDU)	1-21
1.18.1	DISPLAY	1-21
1.18.2	KEYBOARD	1-21
1.18.3	FRONT PANEL ASSEMBLY	1-21
1.18.4	BACK COVER ASSEMBLY	1-25
1.18.5	CARD CAGE	1-25
1.18.6	CPDU MUZZLE VELOCITY PROCESSOR (MVP)	1-26
1.18.7	POWER SUPPLY (PS) MODULE	1-29
1.19	TRANSCEIVER ASSEMBLY	1-30
1.19.1	RF SYSTEM	1-31
1.19.2	DOPPLER AMPLIFIER CCA	1-31
1.19.3	LINEAR POWER SUPPLY MODULE	1-32
1.19.4	MECHANICAL CONSTRUCTION	1-33
1.19.5	RF SECTION	1-33
1.19.6	BACK COVER ASSEMBLY	1-33
1.20	DOPPLER SIMULATOR	1-35
1.21	MOUNTING BRACKET	1-36
1.22	INTERCONNECTION CABLES	1-37
1.23	POWER ADAPTER	1-38
1.24	SECONDARY POWER SOURCE	1-38
1.25	SYSTEM TRANSIT CASE	1-38

1.18 CONTROL PROCESSOR AND DISPLAY UNIT (CPDU)

For the following discussion, refer to Figure 1-3, and Table 1-4. The CPDU is a small, lightweight Man-machine interface unit with low power consumption. The unit can be portable or mounted. The CPDU performs all of the main tasks of the M94 MVS which include:

a. Muzzle velocity measurement and management.

b. Storage of measured MVs and related data.

c. Man-machine interface using keyboard and display.

d. Communication with external devices through digital data links.

The CPDU construction is modular for ease of maintenance. Each plug-in module can be quickly replaced in case of failure. The CPDU consists of three main subassemblies: a front panel, a card cage, and a back cover. Refer to Figure 1-4 for a block diagram of the CPDU.

1.18.1 Display

The display is an alphanumeric 4-lines x 40-characters LCD, with EL backlight illumination. It has low power consumption as all the electronics utilized are of CMOS technology.

1.18.2 Keyboard

The keyboard is a low-profile functional keyboard containing 20 keys arranged in 4 rows of 5 keys, with an actuating force of 0.66 lb (360 gr). The keys are covered by a colored graphic layer of silicon rubber. For night operation, the keyboard is illuminated from underneath by incandescent lamps. Separate keys have been selected for important functions or frequent use. These keys are the ***edit, menu,*** *and* ***function keys***. Key color and position are determined according to key function.

1.18.3 Front Panel Assembly

The front panel assembly contains the display, keyboard, and connectors. The connectors are covered by dust caps and switches on the front panel are protected from mechanical damage. The card cage is mounted on the front panel. The front panel assembly accommodates all the electronics of the unit and is fabricated from aluminum casting and houses the display, keyboard, and operating section. The panel is recessed to protect the switches from damage. The connectors on the panel are secured with safety wire. On the top front surface, there is a cavity for the transparent EMI window glass which is glued from the inside. This method ensures water tightness and EMI protection without reducing display performance.

Table 1-4. CPDU Components, Controls, and Indicators

Index No.	Component/Control/Indicator	Function
1	Handle Strap	Allows easy carrying of CPDU.
2	Display Screen	Communicates system operation and status information to operator.
3	Keyboard	Allows operator to control, test, and operate MVS. Refer to Table 2-1 for complete description of key functions.
4	Antenna Connector (J3)	Connects CPDU to Transceiver. This connector is used to transfer power and ON/OFF control to the Transceiver and receive the Doppler signal.
5	Communication Connector (J2)	Connects CPDU to an external device (computer, etc.).
6	Power Connector (J1)	Connects CPDU to power source.
7	ON/OFF Switch	Circuit breaker used to turn system on and off. The circuit breaker protects the power source in case of a short-circuit failure in the system.
8	CONT Control Potentiometer	Controls light contrast ratio of the display. Permits operator to adjust contrast of LCD display for optimum visibility under varying field conditions.
9	DIM Control Potentiometer	Controls backlight lighting of display and keyboard.
10	MEASURE Indicator	LED that illuminates when CPDU issues measure command and RF signal is transmitted by transceiver.

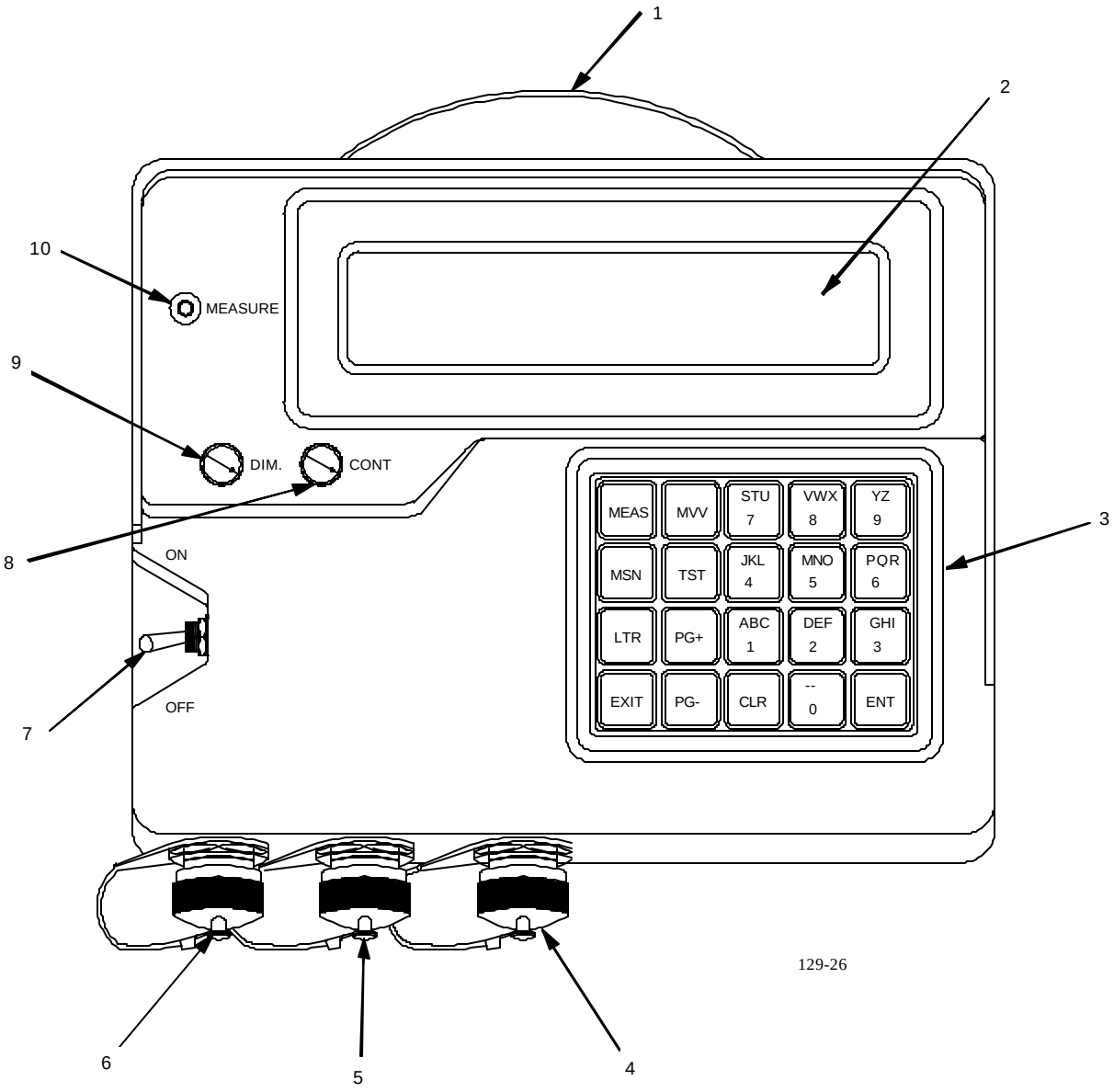

Figure 1-3. CPDU Components, Controls, and Indicators

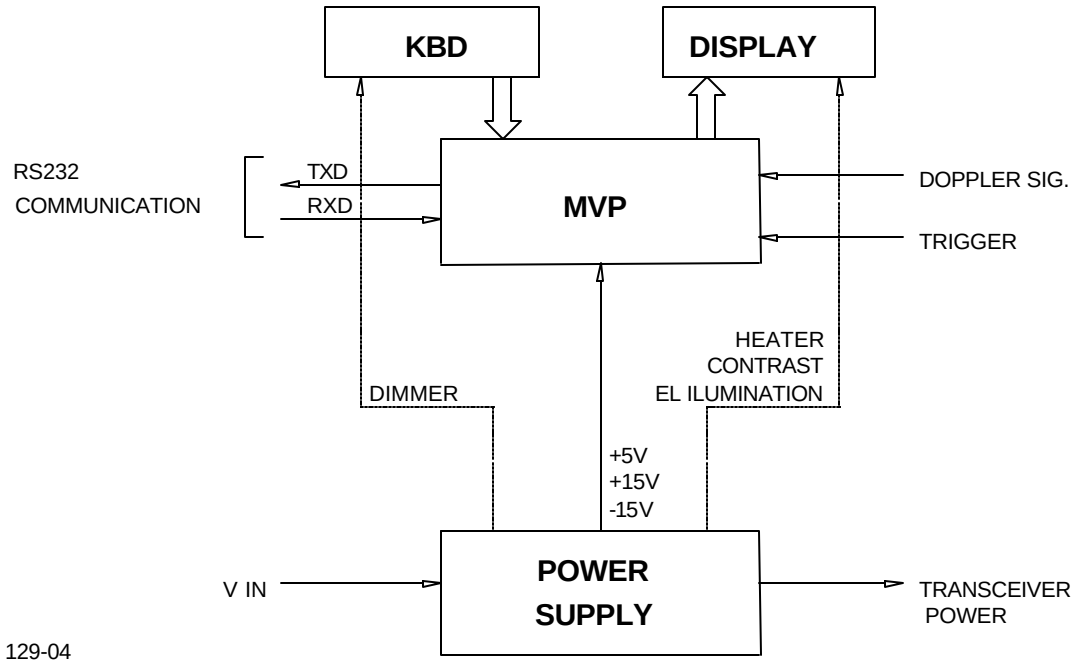

Figure 1-4. CPDU Simplified Block Diagram

The Front Panel Assy includes:

a. Keyboard module
   Keyboard module formed by attaching the following parts:
   1. MP6705069-0 Gasket Keyboard
   2. MP6704824-0 Bezel Keyboard
   3. AY6704586-0 CCA Keyboard
   4. MP6704944-0 Key Cap (20 ea)

b. Panel Controls Indicators and Display:
   1. AY6706702-0 Display Module
   2. ON/OFF Switch (Circuit Breaker)
   3. Contrast Control Potentiometer
   4. Dimmer Control Potentiometer
   5. Measure Indicator

c. AY6706705-1 EMI Module

d. WA6706707-0 Harness

1.18.4 Back Cover Assembly

The back cover assembly is used to enclose the CPDU assembly and contains four mounting threads for mechanical mounting in fixed installations and a handle for easy carrying. The back cover of the unit is a lightweight rigid construction of machined aluminum casting. Eight captive screws fasten the back cover to the front cover. A silicone rubber O-ring seal is positioned between the front panel and the back cover.

1.18.5 Card Cage

A Card Cage is formed by attaching the following parts:

a. AM6706555-0 Right Wall

b. AM6706554-0 Left Wall

c. MP6706561-0 Cage Cover

d. AY6706706-0 Mother Board CCA

When assembled inside the CPDU, they form a rigid construction and incorporate the electronic circuit card assemblies (CCAs). Slots are provided along the card cage side walls for sliding the boards and attachments via fastening wedge locks. The motherboard is connected to the front panel through one connector and to the display through another connector. The card cage is easily removed from the CPDU Front panel by loosening 6 screws to allow accessibility to the keyboard and display modules. The following CCAs are installed in the card cage:

a. AY6706703-0 Muzzle Velocity Processor CCA

b. AY6706612-0 Power Supply CCA

1.18.6 CPDU Muzzle Velocity Processor (MVP)

For the following description, refer to the block diagram in Figure 1-5. The MVP is based on the ADSP-2100 Digital Signal Processor. The MVP circuits and parameters are as follows:

a. 32K x 24 fast EPROM
b. 32K x 16 fast RAM
c. 64K x 8 EEPROM
d. Serial data link, RS-232 and RS-422 (optional)
e. Clock and timing generation circuits
f. Display interface
g. Keyboard interface
h. Doppler signal input circuits
i. Measure control circuits

1.18.6.1 ADSP-2100 Digital Signal Processor

The ADSP-2100 circuits and parameters are as follows:

a. 32-MHz clock
b. 24-bit program bus
c. 16-bit data bus
d. Multiply/accumulate instructions
e. Instructions performed in 125 nsec

1.18.6.2 Program Memory

The program memory consists of 32K x 24-bit words of high-speed EPROM. The EPROM components are on-board programmable.

1.18.6.3 Work Memory

The work memory consists of 32K x 16-bit, high-speed RAM and serves as the sampling and processing work space.

1.18.6.4 Data Base Memory

The data base memory consists of 64K x 8-bit EEPROM and serves for storage of the standard tabular firing tables and normalizing factors, as well as storage of the calculated muzzle velocity variations for different gun and ammunition combinations. This data base can be easily updated through the serial communication link.

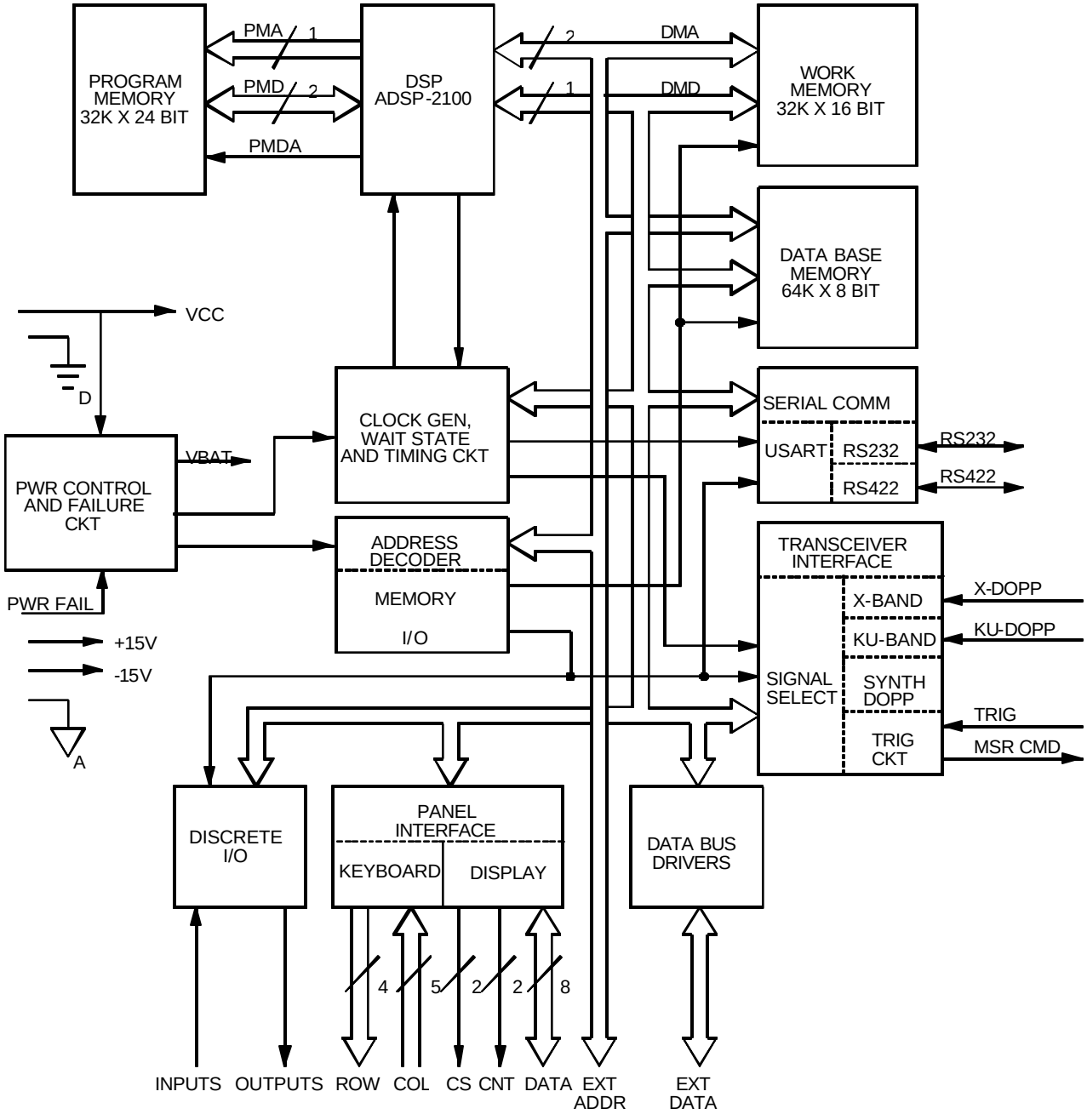

Figure 1-5. CPDU MVP Simplified Block Diagram

1.18.6.5 Serial Communication Link

The serial communication link consists of a USART and RS232 line drivers and receivers. Through this link, the CPDU can be remotely controlled or reprogrammed.

1.18.6.6 Transceiver Interface

The transceiver interface consists of several circuits which enable an interface between the MVP module and the transceiver. These circuits consist of:

a. An X-band interface which amplifies and reshapes the Doppler signal received from the X-band transceiver.

b. A KU-band interface for use with the KU-band Transceiver (not described in this manual).

c. A precise synthetic Doppler frequency generated for self test purposes.

d. A trigger circuit for defining the instant of firing and activating the transceiver.

e. A signal select circuit which transfers the required inputs for sampling and processing.

1.18.6.7 Data Bus Drivers

The data bus drivers are used for connection with other external boards, communication with the display, and software upgrade purposes.

1.18.6.8 Panel Interface

The panel interface is used for the control of panel components and provides the M94 MVS man-machine interface. It consists of:

a. Display Interface. Controls the panel LCD display. It receives the data to be displayed from the processor and controls the display, providing all the necessary signals.

b. Keyboard Interface. The keyboard is sensed by a keyboard encoder. When a pressed key is detected after debouncing, the keyboard encoder issues an interrupt to the processor, which reads the pressed key code placed on the data bus by the encoder.

1.18.6.9 Clock Generator, Wait State, and Timing Circuits

These circuits provide all the necessary system clocks, wait states, and other timing such as the sampling rate for the Doppler signal and baud rate for serial communications.

1.18.6.10 Power Control and Failure Circuit

This circuit provides the required reset and power failure signals. The power failure signal is used to protect the data base memory from being mistakenly overwritten during power on/off or failure. This circuit provides the system the ability to operate properly upon input power disturbances (power decrease under 10 VDC) caused by start-up of other equipment. This is provided by a capacitor which supplies the power to the work memory (RAM) for the period of the power disturbance. The current system mode of operation is stored in that memory. The processor checks that mode and continues operation from the condition it was before the power disturbance occurred. If the power disturbance lasts longer than approximately 60 seconds, the CPDU will resume operation as if being powered-up initially.

1.18.6.11 Discrete I/O

Several discrete inputs/outputs are provided for general use.

1.18.6.12 Address Decoder

The address decoder decodes the various MVP module components addresses when a read/write operation to them is required.

1.18.7 Power Supply (PS) Module

For the following description, refer to the block diagram in
Figure 1-6. The topology of the CPDU PS is a current-mode, forward-converter with input/output coupling and a switching frequency of 400 kHz. This PS is used to power CPDU internal electronics, and supplies +5 VDC, +15 VDC, -15 VDC, and a special output for the transceiver unit. This PS includes an input protection circuit and outputs for driving the backlight illumination of the keyboard and display as well as a driver circuit for the display heater.

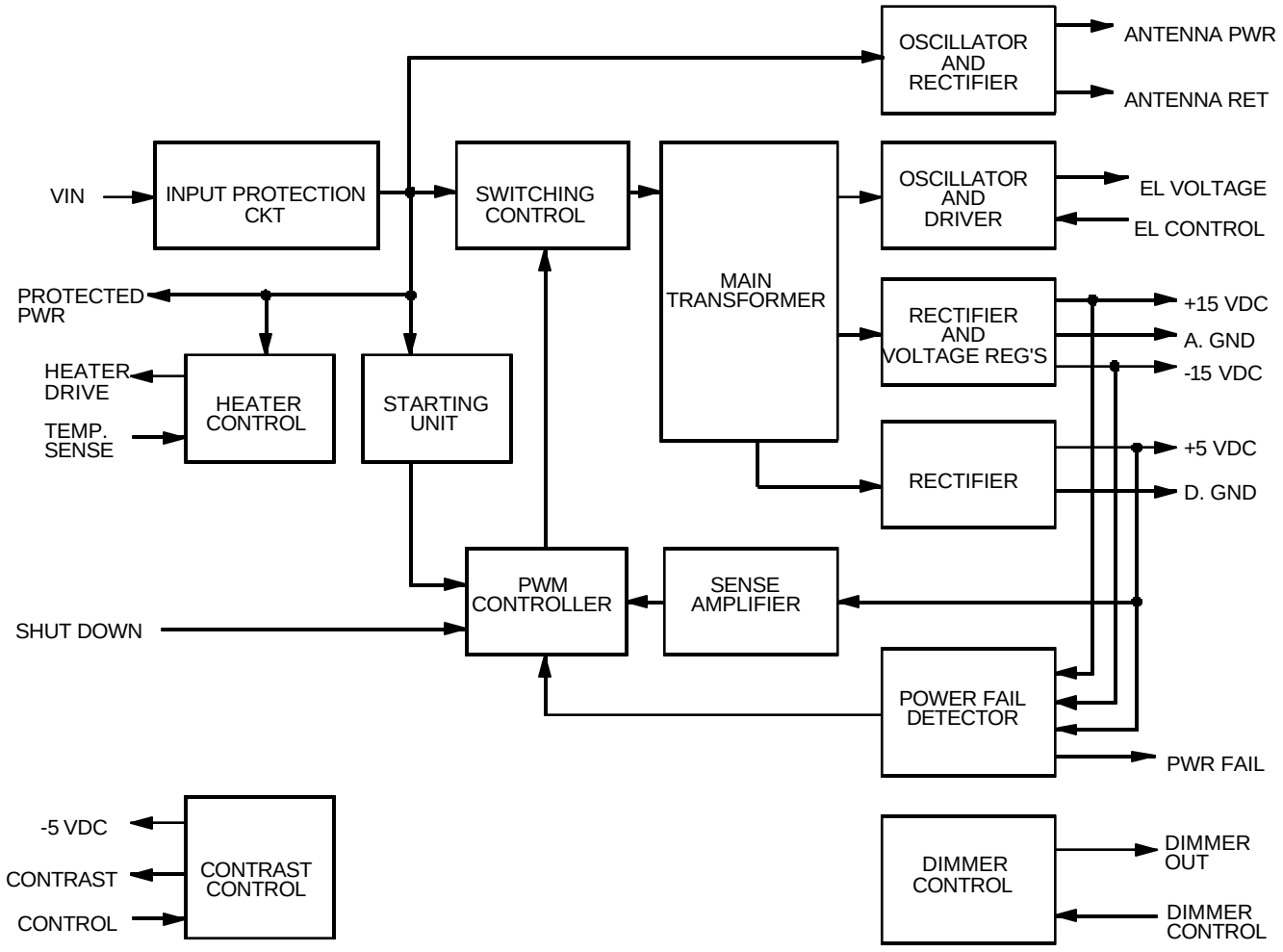

Figure 1-6. Power Supply Module Simplified Block Diagram

1.19 TRANSCEIVER ASSEMBLY

For the following description, refer to the block diagram in Figure 1-7. The transceiver assembly is divided into three main subassemblies:

a. Transmitter-receiver

b. Doppler amplifier

c. Power supply module

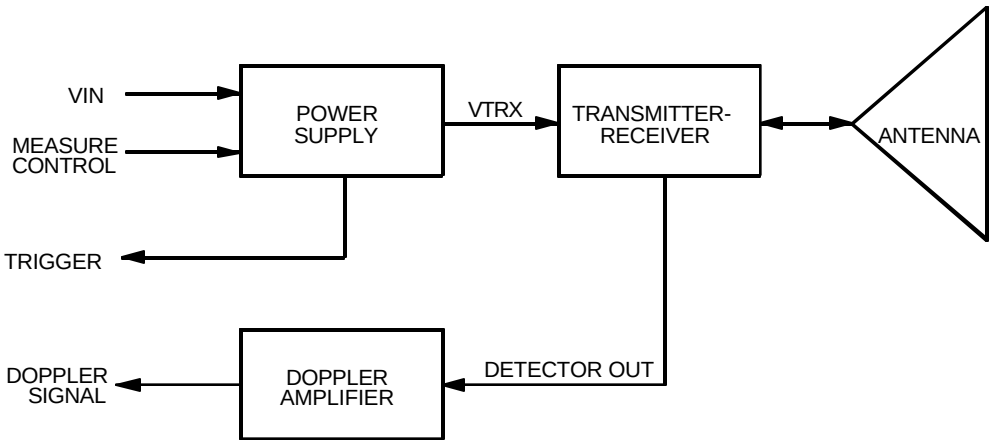

Figure 1-7. Transceiver Assembly Simplified Block Diagram

1.19.1 RF System

The RF system consists of an antenna and a transceiver. The transceiver consists of an extremely stable oscillator, circulator, and mixer. The RF system transmits a low-power, continuous microwave (X-band) signal and receives Doppler-shifted echoes. The detected frequency difference between the transmitted and received frequencies is proportional to the projectile velocity.

1.19.2 Doppler Amplifier CCA

For the following description, refer to the block diagram in Figure 1-8. The Doppler amplifier CCA consists of an amplifier with a bandwidth of 3-140 kHz. The input of the Doppler amplifier CCA is the RF system output which is filtered, amplified, shaped, and transmitted through a differential line driver to the muzzle velocity processor.

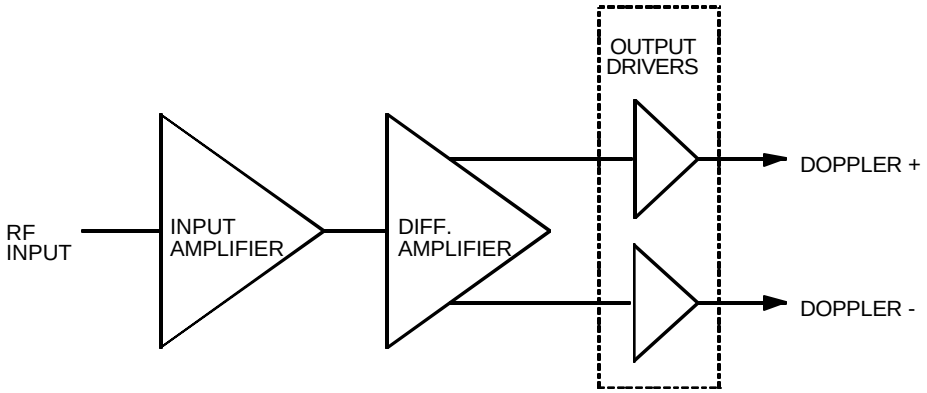

Figure 1-8. Doppler Amplifier CCA Simplified Block Diagram

1.19.3 Linear Power Supply Module

For the following description, refer to the block diagram in Figure 1-9. The power supply generates the required operating voltages for the transceiver internal circuitry. The linear power supply module contains an acceleration switch which detects the instant of gun firing and provides the CPDU with a command to start the measuring process (to start RF transmission and signal sampling).

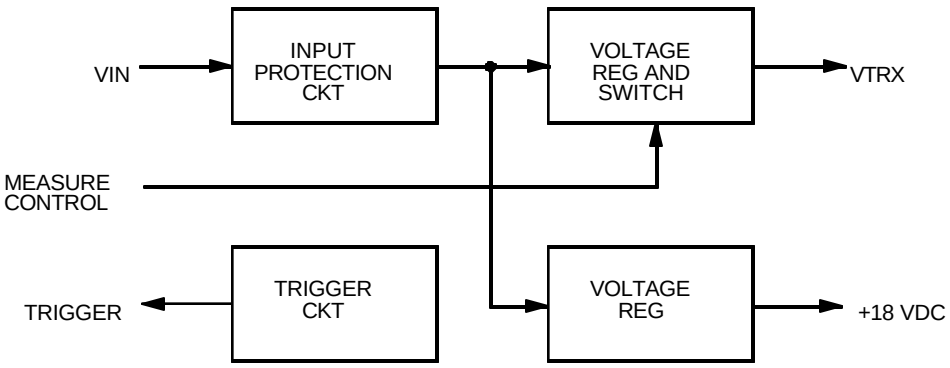

Figure 1-9. Linear Power Supply Module Simplified Block Diagram

1.19.4 Mechanical Construction

For the following description, refer to Figure 1-10. The transceiver consists of the following assemblies:

a. RF section assembly.

b. Back cover assembly

Both sections are fabricated from machined aluminum castings.

1.19.5 RF Section

The RF section assembly accommodates all RF components (microstrip antenna, transceiver, and RF cable which connects between them), the Doppler amplifier, and the power supply. The Doppler amplifier and the power supply are covered with special covers for EMI protection. A silicone rubber gasket seal is positioned between the RF section and the back cover.

1.19.6 Back Cover Assembly

The back cover assembly accommodates the interface connector. The connector is protected with a dust cap. Six captive screws fasten the back cover to the RF section. The back cover is recessed at the connector area in a way that provides a handle for easy carrying and contains four mounting holes for mechanical mounting on the mounting bracket.

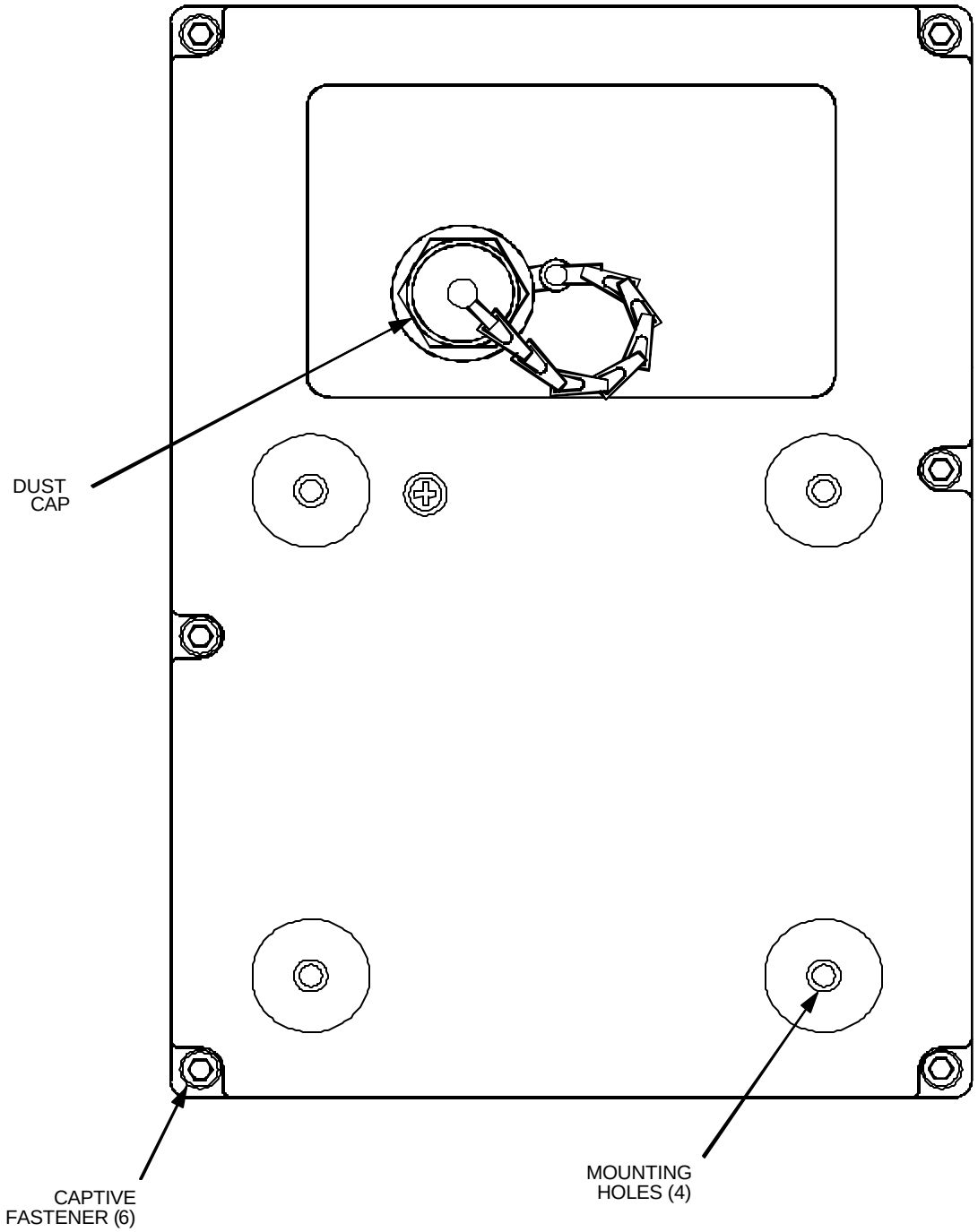

Figure 1-10. Transceiver Assembly

1.20 DOPPLER SIMULATOR

For the following description, refer to Figure 1-11. The Doppler simulator is a lightweight, hand-held test echo generator used to check M94 MVS operation. When held in front of the antenna, it provides a signal which simulates a known muzzle velocity (712 ±50 m/sec), displayed to the operator for verification. It is housed in a flashlight-style case. The unit consists of a cylindrical plastic housing about 20 cm long, and consists of: an antenna with phase shifter, an external momentary press switch, and an internal oscillator board. It requires two standard 1.5 VDC batteries which power the unit The oscillator frequency is designed to simulate a projectile. The oscillator drives a diode placed inside a waveguide device. The diode is switched on and off according to the oscillator frequency, so that the returning wave is modulated by the oscillator frequency. With the activation of the simulator, the transceiver antenna receives a wave modulated by the frequency of the oscillator. The transceiver extracts the oscillator frequency and transmits it to the CPDU which performs the velocity calculation.

CAUTION

Damage will occur to the Doppler Simulator if batteries are placed in Simulator backward.

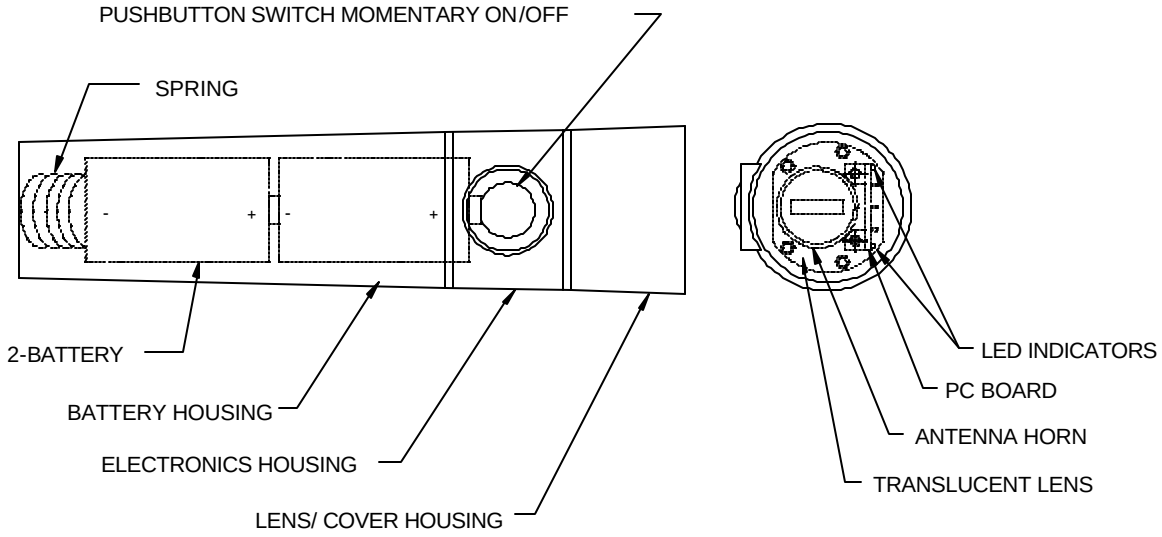

Figure 1-11. Doppler Simulator

1.21 MOUNTING BRACKET

For the following description, refer to Figure 1-12. The mounting bracket is used for mounting the transceiver onto the gun. The bracket is fabricated from aluminum casting and is painted the same color as the transceiver. The bracket contains four shock absorbers/isolators to which the transceiver is mounted and a quick-release mechanism for fast installation and removal. This mechanism contains a handle and an externally-relieved bolt which fastens the bracket to the gun mounting installation.

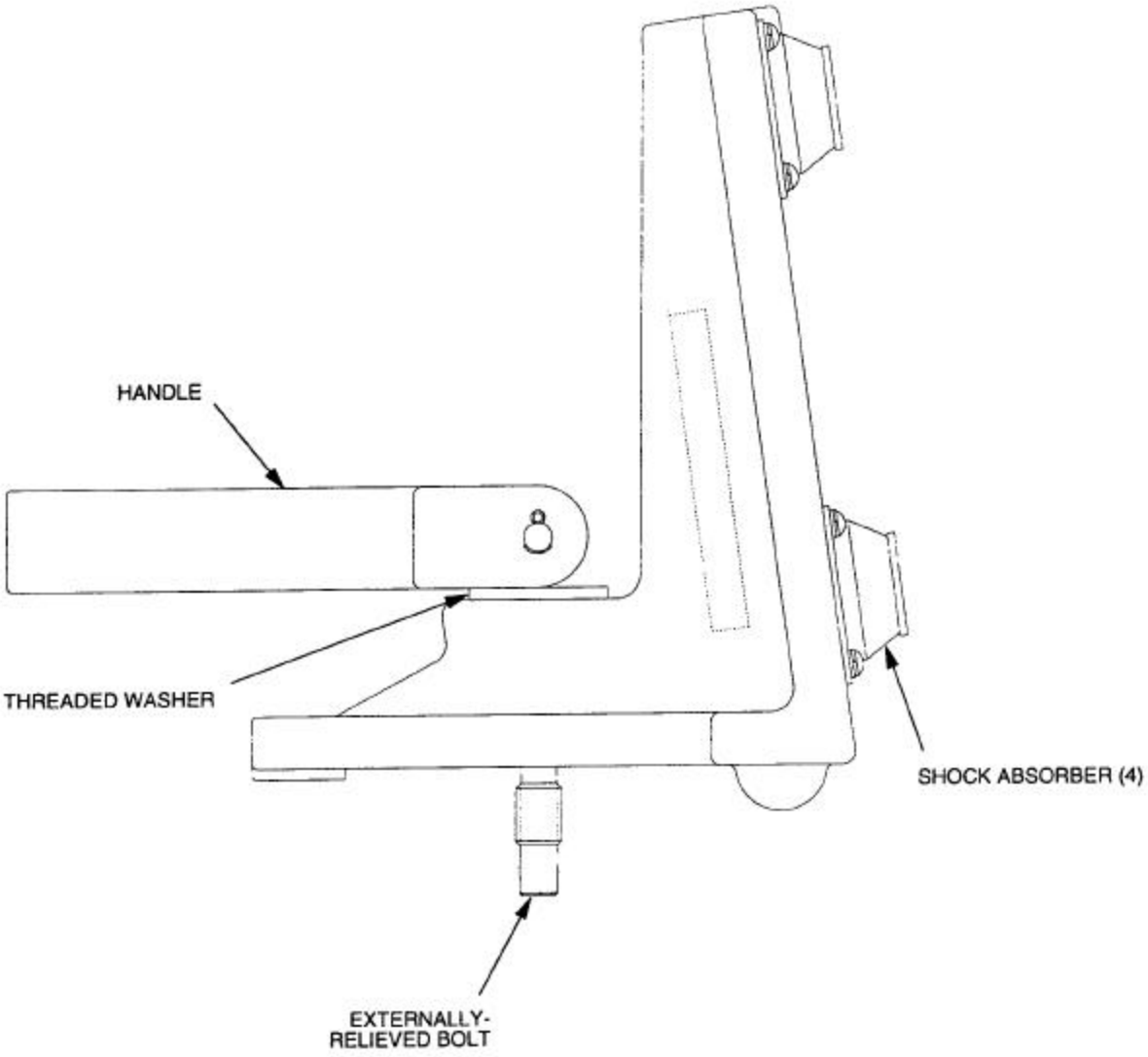

Figure 1-12. Mounting Bracket

1.22 INTERCONNECTION CABLES

For the following description, refer to Figure 1-13. The M94 MVS cables are manufactured using military standard wire which is covered from the outer side by a high-performance jacket. The connectors are protected by bonded boots, which are waterproof and provide EMI shielding protection. The connector plugs are covered by protective dust caps. Each connector is marked with its designation number and destination definition. Marine Corps unit will use a special power-up cable that will supply power to the M94 MVS and GDU. Refer to Appendix G for description of special power-up cable. This special purpose, branched cable assembly (P/N GDU/M-90) will be modified for use on the M94 MVS. A new NSN and modification instruction number will be assigned.

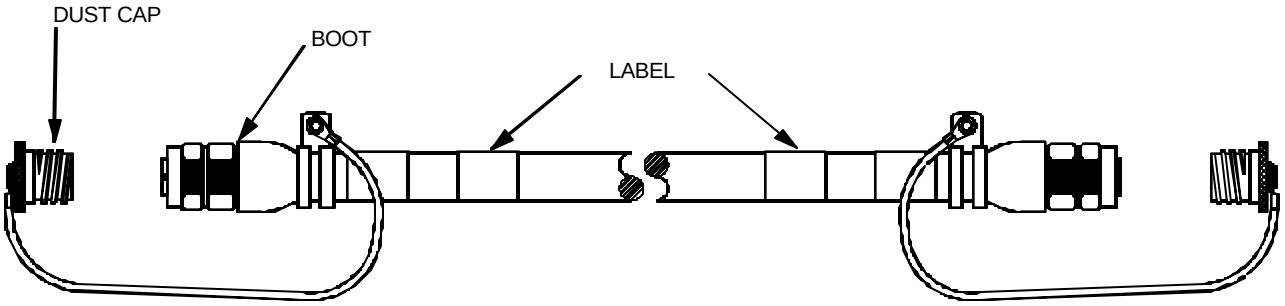

INTERCONNECTION CABLE (30-METER)

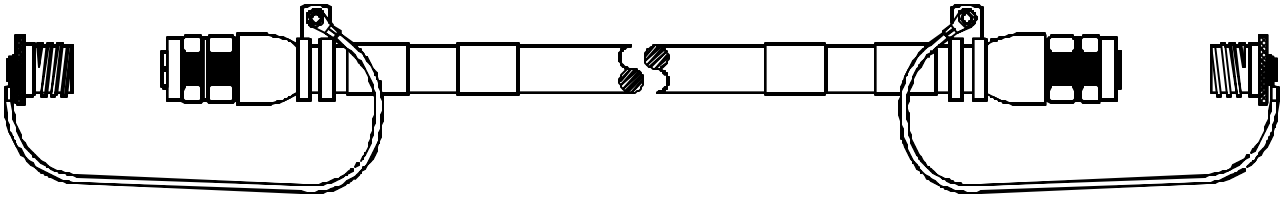

POWER CABLE (50-METER)

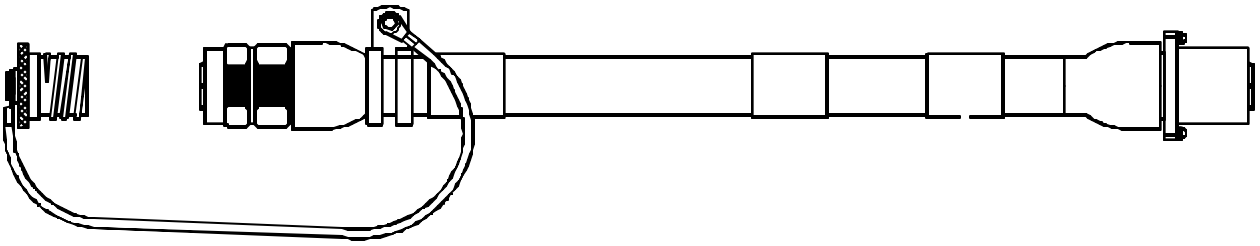

SECONDARY POWER SOURCE CABLE (2-METER)

Figure 1-13. Interconnection Cables

1.23 POWER ADAPTER

The power adapter is used to interface with a vehicle NATO power source thus supplying power to the M94 MVS through the power cable.

1.24 SECONDARY POWER SOURCE

A ***non-rechargeable***, lithium battery is used to power the M94 MVS when no other power source is available.

1.25 SYSTEM TRANSIT CASE

The system transit case is used for equipment storage and transportation.

CHAPTER 2
OPERATING INSTRUCTIONS

CHAPTER CONTENTS

		Page
2.1	CONCISE OPERATING INSTRUCTIONS	2-2
2.1.1	MEASUREMENT PROCESS	2-2
2.1.2	SYSTEM SELF-TESTS	2-4
2.2	OPERATING INSTRUCTIONS	2-5
2.3	CPDU KEYBOARD	2-5
2.4	EDITING MODE	2-6
2.4.1	ENDING DATA ENTRY	2-6
2.4.2	CORRECTING MISTAKES	2-6
2.4.3	ENTERING LETTERS OF THE ALPHABET	2-7
2.4.4	ACCEPTING DEFAULT VALUES	2-7
2.5	POP-UP HELP SCREENS	2-7
2.6	POWERING UP SYSTEM	2-9
2.7	POWER FAIL RECOVERY	2-10
2.8	ENTERING/EDITING MISSION DATA	2-11
2.8.1	EDITING MISSION DATA	2-14
2.9	MEASURING ROUNDS	2-15
2.10	CHANGING PROPELLANT TEMPERATURE	2-16
2.11	CHANGING PROJECTILE WEIGHT	2-16
2.12	MISSION MUZZLE VELOCITY VARIATION	2-16
2.13	STORING MISSION MVV	2-18
2.14	DELETING MVV FROM MEMORY	2-19
2.15	DISCARDING ROUNDS FROM MISSION	2-21
2.16	RETRIEVING STORED MVVS	2-22
2.17	ENDING MISSION	2-23

2.18 SYSTEM TESTS 2-24
2.18.1 CPDU TEST 2-24
2.18.2 SYSTEM TEST 2-27
2.19 MVS SPECIAL OPERATING MODE 2-28

2.1 CONCISE OPERATING INSTRUCTIONS

The purpose of this Section is to provide basic instructions in operating the M94 MVS.

2.1.1 Measurement Process

Using the M94 MVS to measure and store MVV data is a 4-part process:

a. Selecting mission data: gun/projectile/fuse/propellant/charge

b. Measuring the rounds comprising the mission

c. Viewing/Discarding rounds fired (if required to eliminate outliners)

d. Storing the MVV

2.1.1.1 Selecting Mission Data

a. Press “MSN” to reveal the mission data screen.

b. Press “1” to change the mission data.

1. Press “ENT” to skip over parameters which do not need to be changed
2. Select entries from help screens using 2 digit codes (e.g. “05”, not “5”)
3. When selecting Propellant Charge, make sure to enter the 2 digit code, and not the number of the charge zone
4. Propellant temperatures below zero can be entered using the “LTR” key for the “-” (minus) sign
5. Once the “New Mission Data Entry Completed” message appears, the new mission data has been saved. This data will remain the default mission data until changed, even if the M94 is turned off.

2.1.1.2 Measuring Rounds

a. Press “MSN” to verify that the mission data is correct.

NOTE

The M94 may not measure properly if the mission data is incorrect.

b. Press “MEAS”. Verify the “READY” message at the top of the screen. Rounds will now be measured automatically as they are fired.

c. Measure as many rounds as desired. No operator intervention is required.

d. Press “1” to stop. Verify “NOT READY” at the top of the screen.

2.1.1.3 Viewing Average MV and MVV

a. Measure the rounds for the mission according to Section 2.1.1.2.

b. Verify “NOT READY” at the top of the screen.

c. Press “1” (MVV). The Average MV and the MVV are now displayed.

2.1.1.4 Discarding Rounds from the Mission

a. Follow the instructions of Section 2.1.1.3 to reveal the “Mission MVV” screen.

b. Press “1” to reveal the “Show Rounds” screen.

c. To discard a round, enter the 2 digit code number and press ENT.
Note that the “+” sign next to the MV changes to “-”. Discarded rounds can be restored by re-selecting them. Each time a round is selected, the Avg. MV is re-calculated.

d. Repeat step (3) for all rounds to be discarded.

e. Press “EXIT” to return to “Mission MVV” screen.

2.1.1.5 Storing The Mission MVV

a. Follow the instructions of Section 2.1.1.3 to reveal the “Mission MVV” screen.

b. Press “2” to store the Mission MVV.

c. Verify that the message “Current MVV Stored” is displayed.

2.1.1.6 Beginning a New Mission

NOTE

Beginning a new mission erases all rounds from the current mission.

A new mission can be initiated in 3 different ways:

a. Turning the M94 off and on again

b. Changing the mission data

c. By pressing “2” from the “Measure MV” screen after current mission has been stopped (see Section 2.1.1.2)

2.1.2 System Self-Tests

2.1.2.1 Automatic Self-Test

Each time the MVS is powered up it automatically performs self-tests. See Section 2.1.2.2 in the event that a failure was detected.

2.1.2.2 Operator Initiated Self-Test

a. Press "TST" to reveal the "Test" screen.

b. Press "1" to initiate the self-test.

c. In case of failure, refer to Section 2.1.2.3 to interpret the self-test results.

d. Press any key to continue.

e. Press: "**1**" to test the Display,
"**2**" to test the Keyboard, or
"**3**" to test the automatic reset circuitry.

2.1.2.3 Analyzing Self-Test Results

NOTE

In the event that a failure is detected, the CPDU should be turned-off and re-tested by following the instructions of Section 2.2.2.2.

ANT PWR	means that either the Antenna cable or Transceiver is defective
ANT CABLE	means that Transceiver is not connected properly to the CPDU
ACCEL	means that the Transceiver is defective
CPDU#	means that the CPDU is defective (## is a code for higher maintenance levels)

2.1.2.4 System Test (Using Simulator)

a. Press "**TST**" to reveal the "Test" screen.

b. Press "**2**" to reveal the "System Test" screen.

c. Turn on the **Doppler Simulator** pointed to the front of the Transceiver.

d. Verify that both Doppler Simulator **LEDs** are **illuminated.**

e. Press "**ENT**" on the M94.

f. Verify an MV of ***712*±*50 m/s*** on the CPDU display.

2.2 OPERATING INSTRUCTIONS

The M94 employs a menu driven operating system to allow the operator to perform its many functions quickly and efficiently. Displayed messages pop-up screens and menus, guide the operator step by step in performing both elementary and advanced tasks in an organized fashion so that all pertinent information is entered properly into the system via the system keyboard.

This section describes the system controls, displays, indicators, and step by step operating instructions. Refer to Figure 1-2 for system interconnection and Table 1-4 for CPDU control and indicator functions.

2.3 CPDU KEYBOARD

The operator gives the MVS instructions and enters relevant data by using the keyboard. The keyboard contains 20 keys, which are arranged as shown in Figure 2-1. The function of each key is described in Table 2-1.

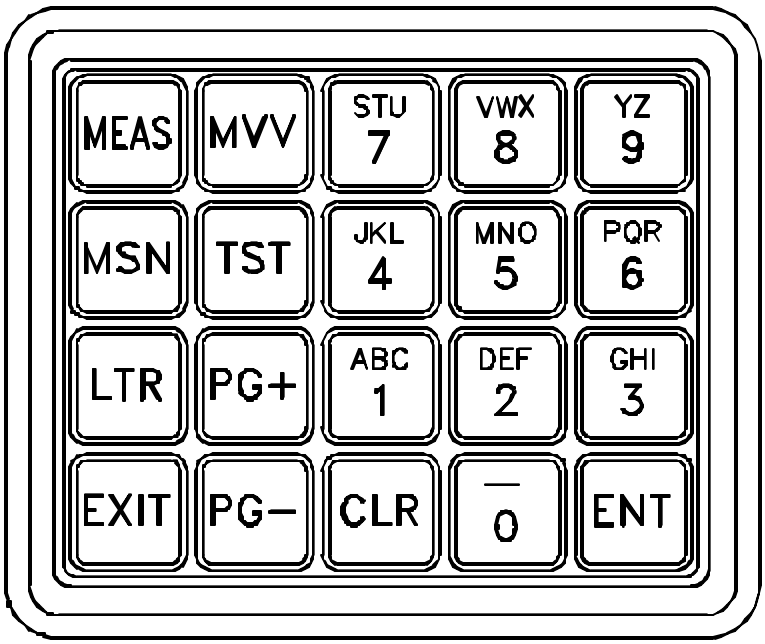

Figure 2-1. CPDU Keyboard

Table 2-1. CPDU Key Functions

Key	Function
CLR	Clear key. During data entry, **CLR** key may be used to correct mistakes.
ENT	Enter key. During data entry, pressing **ENT** indicates operator has completed his entry.
EXIT	Exit key. In some screens, pressing **EXIT** returns system to previous screen.
LTR	Letter key. Key is used during data entry to access alphabet characters, including minus sign (-), on numeric keys.
MEAS	Measure key. Pressing key reveals **MV Measure** screen (Screen 2A) and instructs MVS to measure rounds as they are fired.
MSN	Mission Data Entry key. Pressing key reveals **Mission Data** screen (Screen 1A) from which mission data may be viewed and changed.
MVV	Muzzle Velocity Variation data base key. Pressing key reveals **Find MVV** screen (Screen 6) from which stored MVV data may be retrieved and viewed.
PG+, PG-	Page Forward and Page Back keys. When data exists which cannot all be displayed on single screen at one time, **PG+** and **PG-** keys may be used to scroll forwards and backwards through data.
TST	System test key. Pressing key reveals **Test** screen (Screen 9) from which comprehensive system tests may be performed.
0-9 A-Z "-" "space"	Numeric keys. Used to enter numbers, letters, hyphens, blank spaces, and to select menu options. Letters, the hyphen, and space (third character after "YZ") are accessed during editing by pressing the **LTR** key, then pushing the numeric key once, twice, or three times. Pressing **LTR** again returns keyboard to numeric mode.

2.4 EDITING MODE

In many screens, the option **1-Edit** appears. In order to edit the data on the screen, the number **1** must be pressed in order to allow the operator to change the data appearing on the screen. After **1** is pressed the system enters Editing Mode. The following rules apply during editing mode.

2.4.1 Ending Data Entry

Pressing the **ENT** key indicates that the operator has completed his entry for the data field. When many fields are to be edited on a screen, pressing **ENT** terminates editing for the current field and moves the cursor to the next field for data entry. When **ENT** is pressed from the last field on the screen, the system leaves Editing Mode and saves the changes that were made.

2.4.2 Correcting Mistakes

Pressing the **CLR** key causes the cursor to backspace (nondestructively) to the previous character in a field. If the cursor is already at the first character of the field, pressing **CLR** has no effect.

2.4.3 Entering Letters of the Alphabet

The **LTR** key is used to access the alphabet characters on the top of the numeric keys. However, **LTR** is effective only for a few specific fields in which characters of the alphabet are required. These fields are the Howitzer Number data field, the Propellant Lot Number field, and the Propellant Temperature field (for entering a minus sign, "-"). Pressing **LTR** in any other field will have no effect.

When **LTR** is pressed, the numbers on the numeric key are disabled and the letters on the numeric keys become active. After **LTR** is pressed, the first press on a numeric key enters the first letter of the same key. Pressing the numeric key again replaces the letter just displayed with the next letter of the key. This process may be repeated cyclically. Once the desired letter appears at the cursor position, pressing **LTR** once more activates the numbers on the numeric keys, deactivates the letters, and advances the cursor to the next position.

The following example may be useful. To enter the Howitzer Number B567 on the **Mission Data** screen, the following key strokes would be used:

LTR To activate letter mode.

1 The letter "A" appears, but cursor does not advance.

1 The letter "B" appears, but cursor does not advance.

LTR Exit letter mode, cursor advances.

5 The number "5" appears and cursor advances.

6 The number "6" appears and cursor advances.

7 The number "7" appears but cursor does not advance (end of field).

ENT To end data entry for field.

2.4.4 Accepting Default Values

Any field requiring data entry always provides a default value to the operator. If the default value is acceptable, the operator presses **ENT** to accept the value as is and to move on to the next data field. This logic holds for pop-up help screens as well. In this way, the editing process is simplified for lengthy data entry screens such as the **Mission Data** screen when only a few fields may need to be changed.

2.5 POP-UP HELP SCREENS

Pop-up help screens are used to allow the operator to select a predefined value from a group of values. This helps prevent errors in data entry and aids the operator in making choices.

Pop-up help screens are used during Mission Data entry when selecting Howitzer Type, Projectile Type, Charge Zone, and Fuse Type. They are used during MVV retrieval queries when selecting Howitzer Type, Howitzer Number, Tube Number, Projectile Type, Projectile Family, Propellant, Charge, Lot Number, and Date.

While the title of each screen may differ and the displayed data may vary, the process of selection is identical for all of the help screens. The following is an example of using Pop-up help screens. The operator wishes to select a gun out of the following list: M101A1, M101, M52A1, M52, M108, M102, M119, M114A2, M109, M109A1, M109A2, M109A3, M109A4, M109A5,

M110A2. The selection will be made by using help screens. The first help screen appears with the first section of the list:

```
** Howitzer Type **                    Select: 01
 01) M101A1   02) M101      03) M52A1     04) M52
 05) M108     06) M102      07) M119      08)M114A2
 PG+
```

Selecting involves a two step process. First, the PG+ and PG- keys are used, if necessary, to reveal the screen containing the desired selection. Second, the digit code is entered corresponding to the desired selection.

For example, assume that the operator wishes to select the M109A2 Howitzer. The first screen does not show this selection, so the operator presses PG+ to reveal the next screen.

```
     **Howitzer Type          **Select: 01
 09) M109     10) M109A1   11) M109A2 12) M109A3
 13) M109A4   14) M109A5   15) M110A2
 PG-
```

The operator finds M109A2 next to the code number “11”. The two digits “11” are entered next to the word “Select”, followed by ENT. Pressing ENT makes the selection and closes the help screen.

The following apply when using help screens:

a. The digit code entered in the “Select” field can be corrected by using the CLR key

b. PG+ appears if additional screens are available

c. PG- appears if previous screens are available

d. EXIT can be pressed at any time to cancel the selection process. The default selection appearing upon entering the screen is automatically used if EXIT is pressed.

e. The number of selections available on a given screen may vary according to the space limit for each field. For example, the help screen for Lot Numbers used in MVV queries provides fewer selections per screen because each lot number requires 16 characters.

f. If 100 or more items are available for selection, the 3 digits will be required for the code entry (e.g. the number “1” must be entered as “001”. Otherwise a 2 digit code is used (e.g. the number “1” is entered as “01”)

2.6 POWERING UP SYSTEM

When the MVS is powered up several self-tests are carried out. See Table 2-2.

Table 2-2. MVS Self-Test

No.	Test Type	Identification
1	RAM test.	CPDU (01)
2	EEPROM test.	CPDU (02)
3	Port test.	CPDU (04)
4	Synthetic doppler test.	CPDU (08)
5	Antenna cable test.	ANT CABLE
6	Accelerometer test.	ACCEL
7	Antenna power test.	ANT PWR

In normal operation, the “MEASURE” LED will come ON for approximately 1 second and then go OFF. Should the MVS fail the CPDU Test, perform authorized MVS Troubleshooting Procedures (Para 3.1.13) within your maintenance level.

NOTE

If more than 1 CPDU (XX) type failure occurred, the error codes are summed. For example a RAM failure and EEPROM failure is displayed as CPDU (03). Any failure has its Identification code displayed on following screen:

```
** CPDU Status **
Failed
ANT PWR    ANT CABLE  ACCEL  CPDU (##)
Press Any Key To Continue . . .
```

In case EEPROM test detected defective MVV records the defective records will be deleted and the following message is displayed:

*** MVV Data Base Changed * ***

Press Any Key To Continue . . .

NOTE

Press any key except hot keys.

In case the EEPROM test detected that Fire Control Input (FCI) tables are corrupted the MVS operation mode is changed. Refer to MVS Special Operating Mode section (Para 2.18).

While powering up, the last saved mission data is retrieved and becomes the current mission default values. If last mission data is corrupted pre-defined values are used for the current mission data and the following message is displayed:

**** Last Mission Data Is Corrupted * ***

Using Pre-defined Default Values

Press MSN To Enter True Values . . .

2.7 POWER FAIL RECOVERY

The M94 has the capability of recovering from power failure.

If power is lost for less than approximately 60 seconds, the M94 continues operating normally from the point where the power failure occurred once power is restored. If the power fails for more than approximately 60 seconds, the M94 resets itself.

A consequence of this is that the automatic power-up system self-tests are not performed when recovering from a power failure. During troubleshooting, the operator may need to turn the CPDU on and off several times and still wish to have the system self-tests performed each time. The solution to this is to perform the system self-tests manually by using the **TST** key. Refer to Para 2.17.

2.8 ENTERING/EDITING MISSION DATA

To properly measure and then store muzzle velocities, the appropriate mission data must be entered. The **Mission Data** screens are used for this purpose. Because of the amount of mission data which must be entered, the **Mission Data** screen is divided into three sub screens: The **Gun** Screen (Screen 1A), the **Projectile** Screen (Screen 1B), and the **Propellant** Screen (Screen 1C). The **Gun** Screen is the power-up screen for the system and is also accessed by pressing the **MSN** key. The **PG+** and **PG-** keys may be used to enter the **Projectile** screen and the **Propellant** screen**.** The default data appearing on the screens reflects the parameters which were saved the previous time. By using the **PG+** and **PG-** keys, the operator can view the **Gun**, **Projectile**, and **Propellant** screens for the mission data. Pressing 1 (Edit) will allow inputting data.

```
** Mission Data **                    Gun Screen
Howitz Type:          WWWWWW Howitz N  HHHH
Tube No.: TTTTT                  MM/DD/YY:mm/dd/yy
  1-Edit      Pg+:     Pjctl        Pg-:     Prplt
```

Screen 1A. Mission Data - Gun Screen

Howitz Type : The Howitzer type. The following pop-up help screen is used for selection and appears immediately after “1” (Edit) is pressed:

```
      ** Howitzer Type **                  Select: 01
01) M101A1  02) M101    03) M52A1     04) M52
05) M108        06) M102     07) M119      08) M114A2
PG+
```

Screen 1A-1. Howitzer Type Pop-Up

NOTE

The actual Howitzers appearing for selection may vary depending on the FCI database in use.

Howitz No: The number of the howitzer. Alphanumeric data entry.

Tube No: The tube number. Alphanumeric data entry.

MM/DD/YY: The Date (Month, Day, Year)

```
** Mission Data        **Projectile Screen
Pjctl Type: WWWWWW     Wt:      X Squares
Fuze: FFFFFF
1-Edit          Pg+: Prplt          Pg-: Gun
```

Screen 1B. Mission Data - Projectile Screen

Pjctl Type : The Projectile type. A help screen similar to the following appears to select the desired projectile, immediately after ENT is pressed on the last field of the Gun Screen (MM/DD/YY) or “1-Edit” is selected from the projectile screen:

```
** Pjctl Type ** Select: 01
01) M107 02) M116      03) M110 04) M121A1
05) M485 06) M485A1    07) M449 08) M449A1
PG+
```

Screen 1B-1. Projectile Type Pop-Up

Note that the actual projectiles listed may vary depending on the FCI data base version and on the Howitzer type selected from the Gun Screen.

Wt: The weight of the projectile, in squares or pounds. Once the projectile type has been entered, the WT field automatically adjusts itself to accept data in the appropriate units of either squares or pounds. In the event that the projectile type dictates a weight in pounds, the field will look like Wt: XXX.X LBS

Fuse: The Fuse type. A help screen similar to the following appears immediately after ENT is pressed from the WT field:

```
** Fuze Type ** Select: 01
01) M557 02) M572      03) M739 04) M739A1
05) M582 06) MK399/1   07) M732A2 08) M767
PG+
```

Screen 1B-2. Fuse Type Pop-Up

Note that the actual fuses listed may vary depending on the FCI data base version and on the projectile type selected.

```
** Mission Data                    **Propellant Screen
Prplt Type: PPPPPP                      Chg:      CC
Lot:       LLLLLLLLLLLLLLL Temp:ddd.d F
1-Edi      tPg+:     Gun                 Pg-: Pjctl
```

Screen 1C. Mission Data - Propellant Screen

PrpIt Type: Propellant Designation. A help screen similar to the following appears to select the desired propellant, immediately after ENT is pressed on the last field of the Projectile Screen (Fuse) or “1-Edit” is selected from the Propellant Screen:

```
** Propellant Type **                    Select: 01
 01) M3A1  02) M4A2     03) M119A1 04) M119A2
```

Screen 1C-1. Propellant Type Pop-Up

Note that the actual Propellant types may vary depending on the FCI data base version and on the Howitzer type and Projectile selected from the Gun Screen and the Projectile Screen.

Chg: The charge. A help screen similar to the following appears to select the desired charge, immediately after ENT is pressed from the Propellant Type help screen:

```
                ** Charge **          Select: 01
 01) 3W     02) 4W     03) 5W   04) 6W
 05) 7W
```

Screen 1C-2. Charge Type Pop-Up

Note that the actual charge zones may vary depending on the FCI data base version and on the Howitzer/Projectile/Propellant combination.

Lot: Lot number. Alphanumeric data entry for 16 characters designating the propellant lot (or projectile lot in the case of 105 mm weapons).

Temp: Propellant temperature. Numeric data entry in degrees F. below zero can be entered by using the **LTR** key along with the **-** (minus sign) character on the **0** key.

2.8.1 Editing Mission Data

NOTE

If **Edit** is selected from the **Gun** screen**,** editing will take place for the **Gun** screen**,** the **Projectile** screen and the **Propellant** screen. If **Edit** is selected from the **Projectile** screen**,** editing will take place on that screen and on the **Propellant** screen. If **Edit** is selected from the **Propellant** screen**,** only that screen will be edited.

Press **1** to begin editing the mission data. The **PG+** and **PG-** keys are NOT available during editing mode. During editing, the bottom line of the screens with the choices 1 Edit PG+: PG-: is blanked.

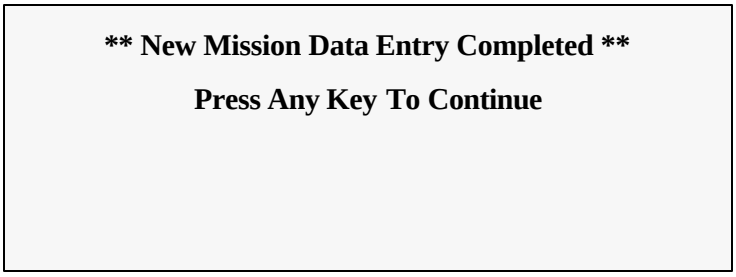

Screen 1D. Mission Data - Entry Completed

NOTE

Press any key except hot keys.

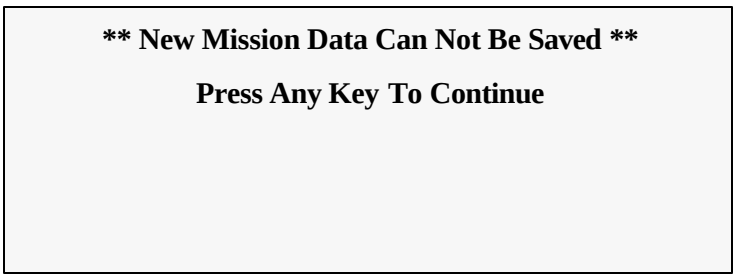

Screen 1E. Mission Data - Not Saved

NOTE

Press any key except hot keys.

Editing is completed once the “Temp” field in the **Propellant** screen (Screen 1C) has been filled in. At this point Screen 1D (**Mission Data**) appears and the new parameters become the new system defaults for mission data. Press any key to display the “Gun Screen”.

NOTE

Appearance of Screen 1E (**Mission Data**) instead of Screen 1D (**Mission Data**) may indicate an MVS malfunction. Try editing the mission data one more time to see if Screen 1E (**Mission Data**) comes up again. In case that Screen 1E (**Mission Data**) appears again, perform CPDU Test (Para 2.17.1). Should the MVS fail the CPDU Test, perform authorized MVS Troubleshooting Procedures (Para 3.1.13) within your approved maintenance level.

2.9 MEASURING ROUNDS

It is possible to measure rounds once the correct mission data has been entered. See Para 2.7 which explains how to enter mission data. After the mission data has been entered, press the **MEAS** key. The M94 is now ready to measure rounds as they are fired. **MV Measure** screen (Screen 2A) appears to display the measurement results as the rounds are fired:

```
** MV Measure **                                  Ready
                    MV:    XXX.X
     Rounds Fired: XXX
1-Stop      2-Temp:XXX.X F      3-Wt:  x Squares
```

Screen 2A. MV Measure - Ready

MV: The last muzzle velocity measured in m/s. If an error occurred, appears instead of the velocity, perform authorized MVS Troubleshooting Procedures (Para 3.1.13) within your approved maintenance level.

Rounds Fired: The number of rounds fired during the current mission, up to a maximum of 999. For the purpose of MVV and Avg. MV calculations and viewing or discarding rounds, only the last 99 rounds are used.

Ready: Indicates that the MVS is READY (armed) to measure rounds.

Temp: The propellant temperature. This is the same temperature which appears on the **Propellant** screen of the Mission Data.

Wt: The projectile weight. This is the same weight which appears on the **Projectile** screen. If the projectile in use is not weighed in squares, this field will be displayed as Wt: XXX.X LBS.

Stop: Press **1** to disable measurement. When this happens, additional options become available (see Para 2.11 Mission Muzzle Velocity Variation).

2.10 CHANGING PROPELLANT TEMPERATURE

The propellant temperature can be changed between rounds during measure. To do this, verify that the **MV Measure** screen is displayed (Screen 2A). Press **2**. When this happens, the text READY becomes NOT READY and the MVS will NOT measure a round if it is fired. The cursor jumps to the Temp field. The operator may enter the new temperature. Remember that temperatures below zero may be entered using the **LTR** key and - (minus) character. After pressing **ENT**, the MVS is now ready to measure again and READY appears on the **MV Measure** screen (Screen 2A).

2.11 CHANGING PROJECTILE WEIGHT

The projectile weight can be changed between rounds. To do this, verify that the **MV Measure** screen is displayed (Screen 2A). Press **3**. When this happens, the text READY becomes NOT READY and the MVS will NOT measure a round if it is fired.

The cursor jumps to the WT field. The operator may enter the new weight. Once the desired weight has been entered, press **ENT**. After pressing **ENT**, the MVS is ready to measure again and the READY message appears.

2.12 MISSION MUZZLE VELOCITY VARIATION

The muzzle velocity variation can be calculated at any time during a mission by performing the following:

Verify that the **MV Measure** screen (Screen 2A) is displayed.

Press **1** to stop the measurement process. The screen should now look like Screen 2B (**MV Measure**):

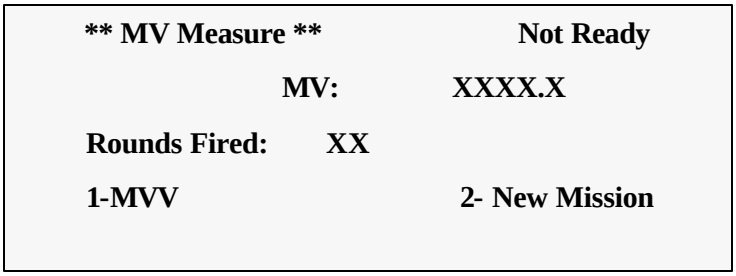

Screen 2B. MV Measure - Not Ready

Note that the MVS is now in NOT READY mode and will NOT measure a round if fired.

Press **1** to select **MVV**. Verify that the **Mission MVV** screen (Screen 3A) appears:

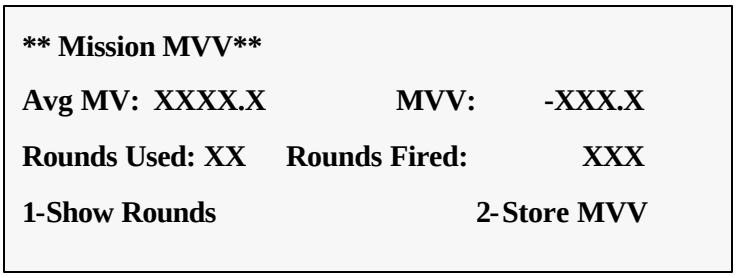

Screen 3A. Mission MVV

The following data is displayed on **Mission MVV** screen (Screen 3A):

MVV: The difference between the average (using the algorithm described for Avg. MV below) of the measured MVs normalized to standard weight and temperature and the standard muzzle velocity.

Avg MV: The average of the measured MVs (un-normalized) for the mission. The Avg MV, in meters per second (m/s), is calculated by first discarding any rounds marked by the operator for deletion, and then those which are 3 m/s or greater from the Avg. (algorithm is applied recursively until all rounds are within 3 m/s of the average). The average of the MV is presented only after 3 valid measured MV (not discarded by either the operator or the algorithm).

Rounds Used: The number of rounds used (not discarded by either the operator or algorithm) in calculating the average.

Rounds Fired: The number of rounds fired in the mission. This is the same number appearing on the **MV Measure** screen (Screen 2B) when Stop is selected. Only the latest 99 rounds are stored in memory for MVV and Avg. MV calculations.

The operator may now press **EXIT** to return to the **MV Measure** screen (Screen 2B). **MEAS** must be pressed before the MVS is able to measure new rounds.

NOTE

When calculating the Average Muzzle Velocity (Avg. MV) it is necessary to discard rounds whose measured MV is significantly different from the other rounds in the mission. These discarded rounds are known as “outliers”. The CPDU uses the following procedure to calculate an Avg. MV having outliers.

a. Calculate the Avg. MV using all the rounds in the mission but excluding those already discarded manually by the operator.

b. Compare each measured MV with the Avg. MV. Any round whose measured MV differs from the Avg. MV by more than 3 m/s is discarded and marked as an outlier.

c. Calculate the Avg. MV again, using the remaining rounds which were not discarded.

d. Perform steps 2 and 3 as many times as required until one of the following occurs:

1. All rounds fall within 3 m/s of the Avg. MV (no more outliers exist). The Avg. MV now contains no outliers, and the MVV can now be calculated.

2. Less than 3 rounds remain (all of the others were discarded). In this case, there is no Avg. MV and no MVV for the mission.

2.13 STORING MISSION MVV

To store the MVV for the current mission, verify that the **Mission MVV** screen (Screen 3A) is displayed. Press **2** to store the MVV to the data base. Press **EXIT** to return to the **MV Measure** screen (Screen 2A). In order to continue measuring, the **MEAS** key must be pressed.

The MVV is stored to nonvolatile memory keyed to the mission data parameters (except for propellant temperature and projectile weight). If a previous MVV was stored with the identical parameters (except for the date), the mission MVV will overwrite it. If a previous MVV with identical mission data parameters was not stored, a new MVV record with the mission data parameters is stored in the nonvolatile memory.

After new **MVV** record is stored the following message appears:

**** Current MVV Stored****

Press Any Key To Continue . . .

Screen 3B. Current MVV Stored

NOTE

Press any key except hot keys.

If the **MVV** field displays **None**, trying to save an **MVV** record will result in the following message:

**** MVV Record Could Not Be Stored****

Press Any Key To Continue . . .

Screen 3C. MVV Not Stored

NOTE

Press any key except hot keys.

NOTE

Getting this message when trying to store an MVV even though an actual MVV value has been calculated may indicate MVS malfunction. Try storing MVV again by pressing "**2**". If Screen 3C (**MVV Not Stored**) appears again, perform CPDU Test in accordance with Para 2.17.1 (the last MVV would not be saved). Should the MVS fail the CPDU Test, perform authorized MVS Troubleshooting Procedures (Para 3.1.13) within your approved maintenance level.

2.14 DELETING MVV FROM MEMORY

In the event that the data base is full (1000 MVVs already stored) and identical mission data was not previously stored to memory Screen 3D (**Data Base is Full**) will appear. The **Delete MVV** screen (Screen 4A) appears when the operator attempts to store the Mission MVV (see Para 2.12).

```
** MVV Data Base Is Full **
** Cannot Store Current MVV **
Press Any Key To Continue . . .
```

Screen 3D. Data Base Is Full

NOTE

Press any key except hot keys.

```
** Delete MVV **                          Gun Screen
Type: XXXXXX Num: XXXX   Tube:    XXXXX
1-Edit  2-Ammo Screen              9-Delete Gun
```

Screen 4A. Delete MVV - Gun Screen

Press **1** to select the howitzer type, howitzer number and the tube number out of the data base using the same method as stated in Para 2.7.1. Press **9** to delete the selected gun combination. Once **9** is pressed the following confirmation screen (Screen 4B) appears.

```
** Warning ! ! ! **
You Are About To Delete All MVV's
For The Gun
1-Delete                    2-Abort
```

Screen 4B. Deletion Warning

Press **1** to delete the gun combination. Press **2** to abort the operation and return to Screen 4A (**Delete MVV-Gun**).

If only a specific MVV is to be deleted, and there is no need to erase all MVVs for a particular gun press **2** from Screen 4A (**Delete MVV-Gun**) to reveal Screen 4C (**Delete MVV-Ammo**).

```
** Delete MVV **                    Ammo Screen
Pjctl:XXXXXX   FAM:XXX   Prplt:XXXXXX Ch:XX
Lot: XXXXXXXXXXXXXXXX        Date:DD/MM/YY
MVV: -XXX.X PG+        PG        2-Gun        9-Delete
```

Screen 4C. Delete MVV - Ammo Screen

This screen is used to scroll through all of the stored MVVs sequentially.

PG+/PG-: To view the next/previous MVV. PG- does not appear on the first screen, and PG+ does not appear on the last.

Del: Press **9** to delete the displayed MVV. A confirmation screen is provided before the deletion is actually performed.

EXIT: Pressing **EXIT** returns to the **Mission MVV** Screen without deleting the MVV.

```
** Warning ! ! ! **
You Are About To Delete An MVV
1-Delete                    2-Abort
```

Screen 4D. Delete MVV - Confirmation Screen

Press **1** to delete the retrieved MVV record. Press **2** to abort operation. After a key is pressed the MVS returns to the **Mission MVV** screen (Screen 3A).

Should the operator desire to change the gun parameters **2** may be pressed to return to the **Delete MVV Gun** screen (Screen 4A).

NOTE

Deleting MVV record(s), does NOT automatically store the mission MVV. Storing Mission MVV must be performed by the operator by following the instruction of Para 2.12.

2.15 DISCARDING ROUNDS FROM MISSION

The operator can manually discard rounds from the mission so that these rounds will not enter into the calculations for the Avg. MV and the MVV. To view and possibly discard rounds from the mission, follow these instructions and then verify that the **Mission MVV** screen is displayed (Screen 3A).

If no rounds have been fired in the mission, pressing **1** (Show Rounds option) (Screen 3A) will result in the following message (Screen 5A):

```
** Rounds List Is Empty **

Press Any Key To Continue . . .
```

Screen 5A. Empty Rounds List

NOTE

Press any key except hot keys.

Press **1** to choose the Show Rounds option. Verify that the **Show Rounds** Screen 5B appears:

```
** Show Rounds**          Avg. MV: XXXX.X
01+XXXX.X 02+XXXX.X 03/XXXX.X 04+XXXX.X
05/XXXX.X 06-XXXX.X 07-XXXX.X 08+XXXX.X
PG+                    PG      Mark: __
```

Screen 5B. Show Rounds

A round which is marked for deletion by the operator has a minus (-) preceding it. Otherwise, a plus (+) precedes the round. A slash (/) precedes the round if the round has been discarded by the MVP from the AVG MV calculation due to the 3 m/s algorithm.

Avg. MV: The average MV using the 3 m/s algorithm. The average is updated each time a round is marked as deleted or a deleted round is marked as undeleted.

PG+, PG-: Allows the operator to view the next/previous screen of rounds. On the first screen, PG- does not appear, and on the last screen, PG+ does not appear.

Mark: Entering a 2-digit number (this means 5 is entered as 05) followed by **ENT** toggles the round between being marked for deletion or not. The minus (-) or plus (+) character preceding the measured MV is toggled accordingly. NN/XXXX.X represents a round automatically discarded by the internal statistics algorithm. After **ENT** is pressed, the Avg. MV is recalculated using the recursive 3 m/s algorithm.

EXIT: Press the **EXIT** key to return to the **Mission MVV** screen (Screen 3A). The MVV and Avg. MV will not include rounds which the operator marked as deleted.

2.16 RETRIEVING STORED MVVs

Any of the 1000 stored MVVs may be retrieved and viewed. Press the **MVV** key to reveal the **Find MVV** screen (Screen 6).

**** Find MVV ****	**Gun Screen**
Type: XXXXXX	**Num: XXXX Tube: XXXXX**
1 – Edit	**2 - Ammo Screen**

Screen 6. Find MVV - Gun Screen

Upon entering this screen, all MVV records are marked for retrieval. By selecting Edit, different gun search parameters can be defined. When editing fields (after 1-Edit is selected) pop-up help menus appear to select the desired value for the field. If MVV records are to be retrieved irrespective of the value of the specific field, the option ALL should be selected from the pop-up menu. Hwz Type Screen 7 is an example pop-up screen used to display the howitzer types stored in memory:

**** HWZ Type ****			**Select : __ 00)All**
01)XXXXXX	**02)XXXXXX**	**03)XXXXXX**	**04)XXXXXX**
05)XXXXXX	**06)XXXXXX**	**07)XXXXXX**	**08)XXXXXX**
PG+			

Screen 7. HWZ Type

The howitzer types presented are only those which actually exist in records stored to the MVV data base. Select 00 (ALL), regardless of howitzer type, to retrieve MVV records. Press **ENT** to confirm the selection and to return to Screen 6 (**Find MVV-Gun**). In a similar manner, the search parameters can be specified for the NUM (howitzer No.) and TUBE fields.

Once the gun parameters are satisfactory in Screen 6 (**Find MVV-Gun Screen**), the operator presses **2** (**Ammo Screen**) for Screen 8A to view and select the ammunition parameters for the MVV search. Verify that the following screen appears:

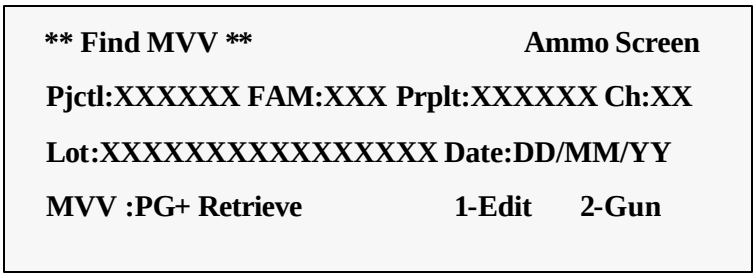

Screen 8A. Find MVV - Ammo Screen

The ammo search parameters may be defined by selecting 1-Edit. For each field, a pop-up help screen appears (similar to Screen 7) from which a specific value may be selected. If the field is not to be taken into account when searching for MVV records, it should have ALL selected as its value. Fields which have specific data filled in imply that the MVV search will retrieve only records which match the filled-in information.

Each subsequent field has its pop-up menu provide options based on the values already assigned to the previous fields. For example, if howitzer type M109A2 is selected, then the pop-up screen for the projectile types will be only for the MVV records which used the M109A2 gun.

Once the search pattern has been selected, press **PG+** to retrieve the first record matching the pattern. **PG-** may be used to go back and inspect MVV records which were previously viewed.

Press **2-Gun** to view the gun parameters which belong to the current MVV record (similar to the **Find MVV**-Gun screen, but the option 1-Edit is not available).

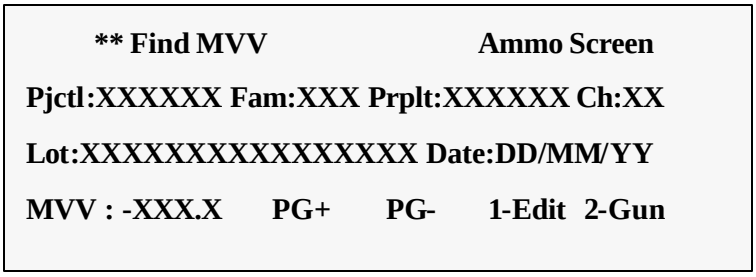

Screen 8B. Find MVV - Ammo Screen

2.17 ENDING MISSION

Ending a mission means that all rounds stored in temporary memory are cleared. Rounds Fired, Rounds Used, Avg. MV, and MVV are all zeroed. There are three ways to end a mission:

a. Turn the MVS power off

b. Choose Edit from any of the Mission Data screens

c. Choose New Mission by pressing 2 after Stop was chosen from the MV Measure screen (Screen 2A).

d. Once a mission is ended, MEAS must be pressed to measure rounds for a new mission.

2.18 SYSTEM TESTS

Internal system tests are automatically performed each time the M94 MVS is powered up. The tests check the system CPDU internal circuitry, the cable connection to the antenna and the power supply to the antenna. If a malfunction is detected, the operator is supplied with a message which tells which test failed. In addition to the power on self-test (POST), a superset of the POST can be initiated at any time from the TEST menu. Furthermore, a complete system test including the antenna is possible from the same TEST menu. Pressing the **TST** key reveals the **TEST** screen (Screen 9).

Screen 9. Test Screen

NOTE

If failure occurs during any one of the tests, perform authorized MVS Troubleshooting Procedures (Para 3.1.13) within your approved maintenance level.

2.18.1 CPDU TEST

By pressing 1 from TEST screen (Screen 9), POST is performed. During the self-test, the CPDU Status screen is displayed (Screen 10A):

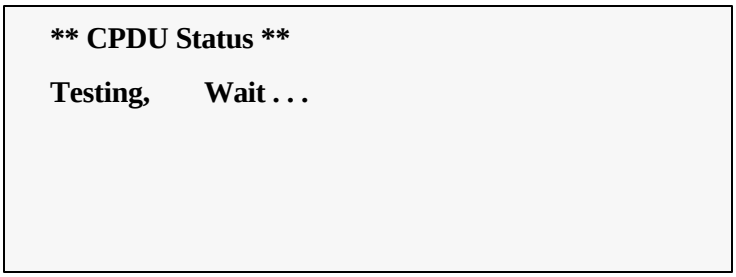

Screen 10A. CPDU Status

If no problems were detected, the following CPDU status message is displayed (Screen 10B):

```
** CPDU Status **
OK
Press Any Key To Continue . . .
```

Screen 10B. CPDU Status

NOTE

Press any key except hot keys.

If the CPDU has failed, the following CPDU status message is displayed (Screen 10C):

```
** CPDU Status **
Failed
ANT PWR  ANT CABLE  ACCEL  CPDU (##)
Press Any Key To Continue . . .
```

Screen 10C. CPDU Status

NOTE

Press any key except hot keys.

Only the actual malfunctions will be displayed, although for the sake of example, all faults appear in the screen above. Faults are described below.

ANT PWR: The voltage supplied to the antenna fell below the normal functional level.

ACCEL The acceleration switch has malfunctioned.

ANT CABLE: The antenna cable has failed or is not connected properly.

CPDU (##): An internal CPDU failure was detected. The ## is a failure code for the relevant maintenance echelon.

If no failures occur, the operator now presses any key to continue the CPDU tests. The **CPDU TEST** screen (Screen 10D) is displayed:

**** CPDU Test ** ROM/EEROM Ver.X.X/Y.Y**

1 - Display

2 - Keyboard

3 - Automatic Reset

Screen 10D. CPDU Test

Note that the software version burned into the ROM and EEROM is displayed on this screen. Operator assistance is required to verify that the display, keyboard, and reset circuitry are functioning properly.

2.18.1.1 Display Test

Perform CPDU Test (Para 2.17.1) until CPDU TEST screen (Screen 10D) appears. Press 1 to reveal the Display Test screen (Screen 11).

!"#$%&'()*+,-./0123456789:;<=>?@ABCDEFGH

IJKLMNOPQRSTUVWXYZ[¥]^_´ abcdefghijklmnop

qrstuvwxyz|}{® ¬ PRESS ONCE TO DARKEN

DISPLAY, TWICE TO EXIT DISPLAY TEST.

Screen 11. Display Test

The operator shall verify that the characters displayed by the CPDU under test match **Display Test** screen (Screen 11). After the display is checked, press any key to darken the entire display so that bad pixels can be identified. Pressing any key again after the display is darkened, returns the system to the **CPDU TEST** screen (Screen 10D).

2.18.1.2 Keyboard Test

From CPDU TEST Screen (Screen 10D), press 2 to reveal Keyboard Test screen (Screen 12).

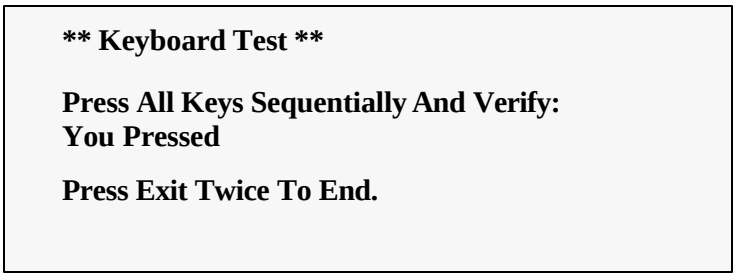

Screen 12. Keyboard Test

The operator should press each key on the keyboard twice. After pressing each key, the name of the key appears after the words YOU PRESSED. The test can be finished by pressing **EXIT** twice (once to test the key, and once to really exit) after which the system returns to the Screen 10D (**CPDU TEST**).

2.18.1.3 Automatic Reset Test

From CPDU TEST screen (Screen 10D), press 3 to reveal Automatic RESET Test screen (Screen 13).

Screen 13. Automatic Reset Test

The operator can verify that the circuitry is functioning properly if, after about 2 seconds, the display goes blank and then the system resets itself (behaves as if it were just turned on). If the system reset does not occur, the automatic reset circuitry is malfunctioning and indicates an internal CPDU failure. Perform authorized MVS Troubleshooting Procedures (Para 3.1.13) within your approved maintenance level

2.18.1.4 DIM/CONTR Controls

a. Turn CONTR knob on CPDU fully CCW for all segments of display to go off and fully CW to go on.

b. Turn DIM knob on CPDU CW and CCW. Verify keyboard and display background illumination varying continuously.

c. Adjust DIM/CONTR control for best visual clarity.

2.18.2 System Test

The system test requires the use of the Doppler Simulator, which is directed at the MVS

transceiver. To begin this test, press TST and press 2 from Test screen (Screen 9) and verify that System Test screen (Screen 14) appears:

```
** System Test **

Activate Doppler Simulator In Front
Of Antenna. Press ENT To Measure.

Verify MV (712± 50): 000.0 1-Abort
```

Screen 14. System Test

Make sure that the antenna is properly connected to the system. Turn on the Doppler Simulator in front of the antenna and press **ENT** on the CPDU keyboard. Verify that the measured MV is within specified limits. Press **EXIT** when the test is completed.

Press **1** to abort operation.

2.19 MVS SPECIAL OPERATING MODE

The MVS has a special emergency measuring mode which automatically takes over in the unlikely event that Fire Control Input (FCI) tables (stored in the MVS non volatile memory) become corrupted.

During MVS power up self test, if the FCI tables are detected to be corrupted, the operator may still be able to measure rounds and calculate an average MV.

If the FCI tables are corrupted, the following screen will appear after powering up.

```
** CPDU Status **

Failed

                                    CPDU (02)

Press Any Key To Continue...
```

NOTE

Press any key except hot keys.

After pressing any key, Screen 16 (**Expected Velocity**) appears.

The valid hot keys for this mode are: "**MSN**", "**MEAS**" and "**TST**". Pressing the "**MVV**" hot key results in the appearance of the next message because MVV data cannot be accessed if the FCI tables are corrupted:

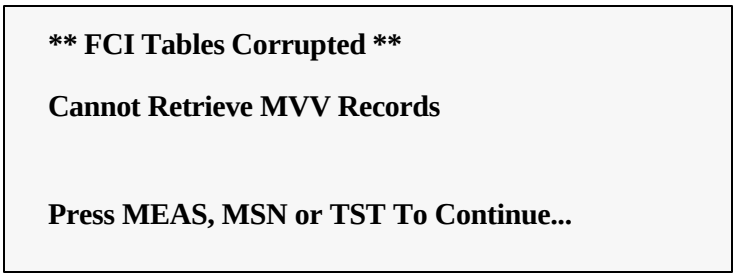

Screen 15. FCI Warning

In order to measure rounds press **MEAS** key. Pressing the **MSN** key reveals Screen 16 (**Expected Velocity**). Gun/Ammo data cannot be entered when the FCI tables are corrupted.

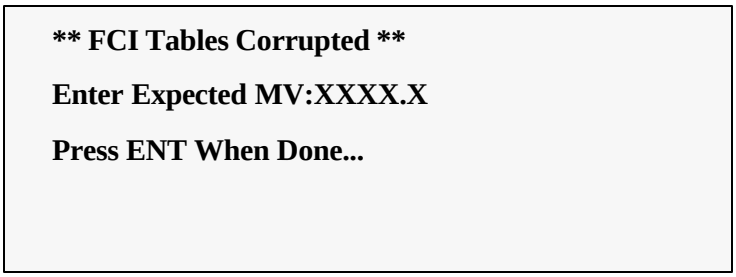

Screen 16. Expected Velocity

Since the FCI tables are corrupted, the operator is responsible for entering the correct expected muzzle velocity. The power-up default expected MV is 500 m/s.

Once the operator enters the expected velocity and presses **ENT** the bottom line of Screen 16 (**Expected Velocity**) changes to “Press MEAS or TST to continue...”.

Upon pressing **MEAS** hot key Screen 17 (**MV Measure**) appears:

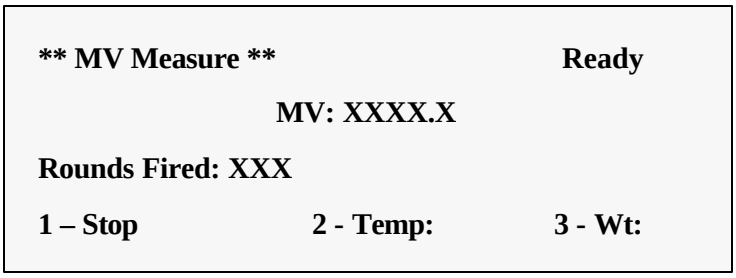

Screen 17. MV Measure

MV: The last muzzle velocity measured in m/s. If an error occurred, **ERROR** appears instead of the velocity. One reason that the CPDU indicates an **ERROR** is that the operator might have input an incorrect expected MV. Press **1** to stop, then **MSN** to verify the expected MV. Correct if necessary. Press **MEAS** to re-initiate the mission. If **ERROR** still appears, perform authorized MVS Troubleshooting Procedures (Para 3.1.13) within your approved maintenance level.

Rounds Fired: The number of rounds fired during the current mission, to a maximum of 999. For the purpose of Avg. MV calculation and viewing or discarding rounds, only the last 99 rounds are used.

Ready: Indicates that the MVS is READY (armed) to measure rounds.

Temp: Not applicable.

Wt: Not applicable

Stop: Press **1** to disable measurement. Once this happens, additional options become available:

**** MV Measure ****	**Not Ready**
MV: XXXX.X	
Rounds Fired: XXX	
1 – MVV	**2 - New Mission**

Screen 18. MV Measure

Note that the MVS is now in **NOT READY** mode and will NOT measure a round if fired.

Press **1** to select MVV. Verify that Screen 19 appears:

**** Mission MVV ****	
Avg MV: XXXX.X	**MVV: Bad FCI**
Rounds Used: XX	**Rounds Fired: XXX**
1 - Show Rounds	**2 - Store MVV**

Screen 19. Mission MVV Screen

The following data is displayed on Screen 19 **(Mission MVV**):

MVV: Not applicable.

Rounds Used: The number of rounds used (not discarded by either the operator or algorithm) in calculating the average.

Rounds Fired: The number of rounds fired in the mission. This is the same number appearing on the **MV Measure** Screen when **Stop** is pressed. Only the last 99 rounds are stored in memory for MVV and Avg. MV calculations.

The operator may now press **EXIT** to return to the **MV Measure** screen. **MEAS** must be pressed before the MVS is able to measure new rounds.

NOTE

The functionally of the **TST** key remains unchanged in the special operating mode.

CHAPTER 3
MAINTENANCE INSTRUCTIONS

CHAPTER CONTENTS

		Page
SECTION I.	GENERAL INSTRUCTIONS	3-2
SECTION II.	CPDU ASSY, P/N AY6706709-0	3-12
SECTION III.	TRANSCEIVER ASSY, P/N'S AY6706571-0 AND AY6706571-2	3-30
SECTION IV.	DISPLAY MODULE, P/N AY6706702-0 AND AY6706702-1	3-49
SECTION V.	KEYBOARD CCA, P/N AY6704586-0	3-62
SECTION VI.	EMI MODULE, P/N AY6706705-1	3-74
SECTION VII.	MOTHERBOARD CCA, P/N AY6706706-0	3-86
SECTION VIII.	DOPPLER AMPLIFIER CCA, P/N AY6706566-0	3-93
SECTION IX.	LINEAR POWER SUPPLY MODULE, P/N AY6706620-0	3-106
SECTION X.	DOPPLER SIMULATOR, P/N AY6706690-0	3-120
SECTION XI.	BRACKET ASSEMBLY, P/N 12922098	3-136
SECTION XII.	INTERCONNECTION CABLE (30-METER), P/N WA6706719-0	3-140
SECTION XIII.	POWER CABLE (50-METER), P/N WA6706717-0	3-146
SECTION XIV.	SECONDARY POWER SOURCE CABLE, P/N WA6708023-0	3-152
SECTION XV.	POWER ADAPTER, P/N WA6706718-0	3-158
SECTION XVI.	FRONT PANEL ASSEMBLY, P/N AY6706708-0	3-163
SECTION XVII.	CPDU COVER ASSEMBLY, P/N AM6706693-0	3-172
SECTION XVIII.	HARNESS ASSY, P/N WA6706707-0	3-175
SECTION XIX.	CABLE DRUM, P/N AM6707950-0	3-186
SECTION XX.	CARRYING CASE, P/N AM6706714-0	3-190

SECTION I. GENERAL INSTRUCTIONS

SECTION CONTENTS

		Page
3.1	GENERAL	3-2
3.1.1	MAINTENANCE SCHEDULING	3-2
3.1.2	TEST EQUIPMENT AND SPECIAL TOOLS REQUIRED	3-3
3.1.3	MATERIALS REQUIRED	3-4
3.1.4	CLEANING AND LUBRICATION	3-4
3.1.5	EXTERNAL INSPECTION	3-5
3.1.6	INTERNAL INSPECTION	3-5
3.1.7	CABLE TESTING	3-6
3.1.8	MINOR REPAIRS	3-6
3.1.9	REFINISH OF PAINTED SURFACES	3-6
3.1.10	REPLACEMENT OF IDENTIFICATION PLATES	3-7
3.1.11	REPAIR OF ASSEMBLIES	3-7
3.1.12	PERFORMANCE VERIFICATION	3-7
3.1.13	MVS TROUBLESHOOTING	3-7

3.1 GENERAL

This chapter provides maintenance instructions for all M94 MVS components. Refer to Appendix D for depot-level maintenance instructions on components that are not listed in this chapter.

3.1.1 Maintenance Scheduling

Table 3-1 provides the maintenance schedule for the M94 MVS and refers to the applicable paragraph describing the check.

Table 3-1. Maintenance Schedule

Echelon	Maintenance Level	Maintenance Action	Paragraph	Frequency
1	Operator	Cleaning and Lubrication External Inspection Performance Verification Replacement of Doppler Simulator Batteries	3.1.4 3.1.5 3.1.12 3.1.13.10	Every use Every use Every use As Required
2	Organizational	R&R of all LRUs Repair of Mounting Bracket Repair of Cable Drum Assy Repair of Carrying Case	3.3 3.11 3.19 3.20	As required As required As required As required
3/4	Direct/General Support	R&R of all SRUs, repair of all cables		As required
5	Depot	Repair of repairable components Transceiver Performance		As required 24 month

3.1.2 Test Equipment and Special Tools Required

Unless otherwise specified, the test equipment and special tools required for the maintenance of the MVS components are listed in their respective sections in this chapter. Test equipment and special tools are listed and illustrated in Section III of Appendix C. The ones listed in Table 3-2 below are listed but not illustrated in Section III of Appendix C.

NOTE

Marine Corps users refer to TM 10510-14-1A for equivalent test equipment and special tools.

Table 3-2. Test Equipment and Special Tools Required

Nomenclature	Type/Part No.	Appendix C Fig. 27 Item No.
Power Meter	Hewlett Packard, Model ME-162/U	45
Crimping Tool	Midland Ross, Model 13-0703-496	47
Digital Counter	Fluke, Model 7250A	42
Function Generator	Wave Tek, Model 178	41
Oscilloscope	Hewlett Packard, Model 1070B	44

3.1.3 Materials Required

Repair materials and other consumable items required for general maintenance of the MVS are listed in Table 3-3.

Table 3-3. Materials Required

Nomenclature	Type/Part No.	Appendix F Item No.
Acetone	0A51	1
Acid Brush	H-B-643	6
Lint-Free Cloth	8722-0088	7
Methylethylketone	ASTM-D-740	14
Alcohol	TT-I-735A	4 and 24
Paint	MIL-C-46168 Color 383 IAW FED-STD-595, CARC	35
Sealing Compound	83-31	16
Primer	747-55	17
Solder	SN63WRMAP3	23
Adhesive	RTV732	34

3.1.4 Cleaning and Lubrication

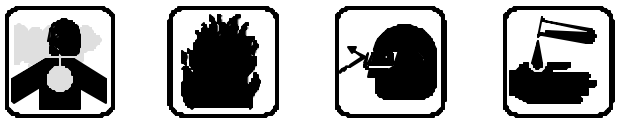

WARNING

Use solvent in a well ventilated area. Avoid breathing vapors. Keep it away from flames.

CAUTION

This equipment contains assemblies subject to damage by electrostatic discharge. Use approved grounding procedures before touching, removing, or inserting circuit card assemblies.

NOTE

Normally, the M94 MVS will not require cleaning of any internal parts because it is sealed against dirt and moisture.

a. Clean M94 MVS units and cable surfaces with a clean, lint-free cloth moistened with solvent. Cleaning materials and compounds are listed in Table 3-3.

b. Clean electronic parts with a clean, dry, lint-free cloth. Remove any foreign matter from between terminals. Use a soft bristle brush, lightly moistened with alcohol, to clean areas difficult to reach with a cloth. Dry thoroughly.

c. Wiring and terminals must be free of dirt and corrosion. Scrape off corrosion and clean connections with a soft bristle brush lightly moistened with alcohol. Remove alcohol residue with a clean, dry, lint-free cloth.

3.1.5 External Inspection

If any discrepancies are discovered, refer to the applicable repair and replacement procedures provided in the appropriate sections of this chapter.

a. Inspect all components for security of attachment.

b. Inspect all indicator lamps for broken lenses.

c. Inspect display for broken or severely scratched window.

d. Inspect all switches and control knobs for secure attachment and proper alignment.

e. Inspect all parts for damage, wear, and deterioration.

f. Inspect all parts for nicks, cracks, scoring, dents, scratches, corrosion, and broken welds.

g. Inspect all threaded parts for crossed, stripped, or otherwise damaged threads.

h. Inspect all wiring for bent or broken leads; for cracked, frayed, deteriorated worn, overheated, or burned insulation; and security of attachment. Check lacing for security of attachment.

i. Inspect painted surfaces for cracked, chipped, blistered, or deteriorated paint film.

j. Set DMM to RESISTANCE mode.

k. Inspect connectors for broken, bent, or loose pins and secure mounting.

l. Inspect all cables for nicks, cracks, and broken wires.

3.1.6 Internal Inspection

If any discrepancies are discovered, refer to the applicable repair and replacement procedures provided in the appropriate sections of this chapter.

CAUTION

This equipment contains assemblies subject to damage by electrostatic discharge. Use approved grounding procedures before touching, removing, or inserting circuit card assemblies.

a. Inspect all components for security of attachment.

b. Inspect all parts for damage, wear, and deterioration.

c. Inspect all parts for nicks, cracks, scoring, dents, scratches, corrosion, and broken welds.

d. Inspect all threaded parts for crossed, stripped, or otherwise damaged threads.

e. Inspect all electronic parts for indication of overheating, cracked bodies, loose terminals, broken leads, and other indications of damage or deterioration.

f. Inspect all wiring for bent or broken leads; for cracked, frayed, deteriorated worn, overheated, or burned insulation; and security of attachment. Check lacing for security of attachment.

g. Inspect wire bundles. Wire bundles must be securely held in place and not pinched or crimped.

h. Inspect all semiconductor devices for cracked and split bodies and indication of overheating.

i. Inspect values of resistors and capacitors suspected of being defective.

j. Inspect painted surfaces for cracked, chipped, blistered, or deteriorated paint film.

k. Inspect all threaded inserts and nut plates for security of attachment.

l. Inspect connectors for broken, bent, or loose pins and secure mounting.

m. Inspect all cables for nicks, cracks, and broken wires.

3.1.7 Cable Testing

Cable assembly testing consists of performing continuity checks. No special test equipment is required. The cables shall be tested using a digital multimeter or any other standard continuity test equipment. Each cable shall be tested for compliance with its individual wiring diagram. Refer to appropriate sections in Chapter 3 for cable testing and repair procedures.

3.1.8 Minor Repairs

Minor repair of the M94 MVS is limited to replacement of indicator lamps, controls, and other easily accessible parts and cleaning of equipment surfaces.

3.1.9 Refinish of Painted Surfaces

Repair damaged CPDU and Transceiver Assy painted surfaces in accordance with TM 43-0139 using forest green CARC color IAW FED-STD-595. For U.S. Marine Corps, refer to TM 4750-15/1.

WARNING

CARC paint is a carcinogenic material and must be used carefully.

CAUTION

Do not paint radome.

3.1.10 Replacement of Identification Plates

Replace damaged plates as follows:

a. Remove plate by peeling from case.

b. Be sure plate installation area is clean of old bonding residue. Refer to para. 3.1.4 for cleaning instructions.

c. Remove protective covering from back of plate and firmly press plate onto case.

3.1.11 Repair of Assemblies

Repair and replacement of failed panel and printed wiring assemblies, components, damaged wiring, and cables shall be performed according to Technical Manual standard work practices.

3.1.12 Performance Verification

WARNING

Certain circuits operate with high voltages. Ensure equipment power is off prior to disassembly, assembly, disconnecting or connecting connectors.

CAUTION

This equipment contains assemblies subject to damage by electrostatic discharge. Use approved grounding procedures before touching, removing, or installing circuit card assemblies.

a. Set CPDU ON/OFF switch to OFF.

b. Connect equipment in accordance with **Figure 1-2.**

c. Perform System Tests in accordance with para. 2.18.

3.1.13 MVS Troubleshooting

This section contains information and procedures to aid the operator in overcoming operating problems and isolating the malfunctioning unit. For each type of malfunction the following paragraphs describe the proper procedure to be taken. Verify that the power and antenna cables are properly connected prior to performing troubleshooting (see para. 1.17). After malfunction isolation and repair, perform System Test IAW para. 2.18.

3.1.13.1 CPDU Does Not Operate Properly

NOTE

If CPDU does not respond to Keyboard, Dimmer or Contrast, perform fault isolation procedures IAW para. 3.2.9.1 and 3.2.9.2. Otherwise, perform fault isolation procedures during Functional Test IAW para. 3.2.9.3.

a. Verify that power switch is in the ON position. Turn Contrast button back and forth and inspect display for any reaction.

b. Visually inspect Power Cable, Interconnection Cable and associated connectors for physical damage. Verify that all connectors are fully engaged.

c. Check power source voltage (18-30 V) and polarity.

d. Replace Power Cable and Interconnection Cable. Check operation of MVS again.

e. Replace CPDU if the above did not uncover faults.

3.1.13.2 CPDU Status Failed: CPDU (##)

NOTE

"##" represents an error code number.

a. Turn the CPDU off and on (see para. 2.6).

b. If error message does not reappear, malfunction is corrected.

c. If malfunction persists, replace CPDU.

3.1.13.3 CPDU Status Failed: ANT PWR

a. Turn off CPDU for a minimum of 60 seconds.

b. Disconnect Interconnection Cable from connector J3 on CPDU.

c. Turn on CPDU.

NOTE

Antenna cable error at this point is normal.

d. If ANT PWR message still appears, replace CPDU.

e. If message does not appear, check Interconnection Cable. Pay attention to connector pins and replace cable if necessary.

f. If cable is OK, replace Transceiver.

3.1.13.4 CPDU Status Failed: ANT Cable

a. Turn off CPDU.

b. Verify that Interconnection Cable is securely fastened to both CPDU and Transceiver.

c. Turn on CPDU. If problem persists, replace Interconnection Cable (see para. 2.6).

d. If problem persists, replace CPDU and rerun test.

e. If problem persists, replace Transceiver and rerun test.

3.1.13.5 CPDU Status Failed: ACCEL

a. Turn off CPDU.

b. Verify that Interconnection Cable is securely fastened to CPDU and Transceiver and it is not physically damaged.

NOTE

It may be necessary to press TST key twice to get to Test Screen.

c. After the system being off for at least 60 seconds, turn on the CPDU and perform CPDU Test IAW para. 2.18.1.

d. If problem persists, disconnect Interconnection Cable at Transceiver end and repeat CPDU Test.

NOTE

An ANT CABLE error at this point is normal.

e. If problem is resolved, replace Transceiver. If ACCL fault persists, disconnect Interconnection Cable from CPDU and repeat CPDU Test. If ACCL fault is resolved, replace Interconnection Cable.

f. If ACCL fault persists, the problem is within the CPDU. Replace CPDU.

3.1.13.6 CPDU Does not Exit from “MV MEASURE" Screen

a. To exit MV Measure screen, CPDU must be in NOT READY mode.

b. Press **1** to go to NOT READY mode. Notice NOT READY Message.

3.1.13.7 “ERROR" During Measure.
Follow this procedure if “ERROR" is displayed in the MV field while attempting to measure a round:

a. Stop mission by pressing **1**.

b. Verify that Transceiver Assy is firmly mounted to Gun, that Interconnecting Cable is undamaged and securely fastened on both ends.

c. Press **MSN** and verify that proper mission data has been entered.

d. Perform the CPDU Test procedure (the automatic test only) IAW para. 2.18.1.

e. If CPDU fails test, refer to para. 3.1.13.2 - 3.1.13.5.

f. If the test passes, perform System Test IAW para. 2.18.2.

g. If System Test fails, perform procedure IAW para. 3.1.13.8 and 3.1.13.9.

h. If test passes it is likely that the problem has been corrected. Press **MEAS** to continue measuring rounds. If “ERROR" during measurement still occurs, replace Transceiver.

3.1.13.8 "ERROR" During System Test.
Follow this procedure if measured velocity does not fall within limits or "ERROR" is displayed while using Doppler Simulator during System Test.

a. Verify that Doppler Simulator is firmly held in front of Transceiver and that both LEDs are illuminating. If not, see para. 3.1.13.10.

b. Operate Doppler Simulator before starting measurement test.

c. Repeat System Test procedure IAW para. 2.18.2.

d. If problem still exists, verify if cause is interference of a near-by radar.
Repeat the system test procedure without the doppler simulation.
The MEASURE LED should illuminate continuously.
If a false measurement occurs, the cause is RF interference (RFI).
Remove the RFI source and repeat System Test procedure IAW para. 2.18.2.

e. If the cause is not due to RFI, perform CPDU Test procedure IAW para. 2.18.1.

f. If the message is "CPDU FAULTS DETECTED-CPDU (##)" the malfunction is in CPDU. Replace CPDU.

g. If CPDU passes test, the problem is in Transceiver. Replace Transceiver.

3.1.13.9 CPDU Remains In "MEASURE" Mode DURING SYSTEM TEST.
The CPDU remains in the "MEASURE" mode with the MEASURE LED "ON".

a. Abort current operation and press **TST** key.

b. Verify that Doppler Simulator is firmly held in front of Transceiver. Operate Doppler Simulator before starting System Test. Verify that both LEDs are illuminating.
If not, see para. 3.1.13.10.

c. Perform System Test procedure IAW para. 2.18.2. If test passes, resume normal operation.

d. If problem still exists, inspect Interconnection Cable and replace if necessary.

e. Repeat System Test procedure.

f. Perform CPDU Test procedure IAW para. 2.18.1.

g. If either test fails, replace CPDU.

h. Rerun CPDU Test and System Test IAW para. 2.18.1 and 2.18.2.

i. If problem persists, replace Transceiver Assy.

3.1.13.10 Doppler Simulator LED.

a. When operating Doppler Simulator only one LED lights:

Doppler Simulator is defective. Replace Unit.

b. When operating the Doppler Simulator, both LEDs do not light:

1. Replace batteries.

If LEDs still do not light after replacement of batteries, Doppler Simulator is defective. Replace unit.

3.1.13.11 CPDU Does Not Respond To Key Strokes.

a. Verify that a valid key was pressed.

b. Perform CPDU OFF/ON procedure (see para. 2.6).

c. If there is still a failure, replace CPDU.

3.1.13.12 Display Contrast Adjustment.

a. If Contrast Knob has no effect on display, replace CPDU.

3.1.13.13 Display and Keyboard Dimmer Adjustment.

a. If Dimmer Knob has wrong effect on Display or Keyboard, replace CPDU.

3.1.13.14 Information Displayed Incorrectly.

a. Perform CPDU OFF/ON procedure (see para. 2.6).

b. If there is still a failure, replace CPDU.

3.1.13.15 "MEASURE" LED doesn't light or lights continuously.

a. Replace CPDU.

3.1.13.16 CPDU Remains "READY" During Firing.

The CPDU remains in the "READY" state during firing and does not measure the round fired.

a. Press **1** to abort Measure.

b. Perform System Test IAW para. 2.18.2.

c. If System Test fails, refer to para. 3.1.13.8, 3.1.13.9.

d. If System Test passes, inspect Interconnection Cable and replace if required.

e. If cable is OK, replace Transceiver Assy. Press **MEAS** and continue measuring rounds.

f. If problem still exists, replace CPDU.

SECTION II. CPDU ASSY, P/N AY6706709-0

SECTION CONTENTS

		Page
3.2	CPDU ASSY, P/N AY6706709-0	3-12
3.2.1	GENERAL	3-12
3.2.2	TEST EQUIPMENT AND SPECIAL TOOLS REQUIRED	3-12
3.2.3	MATERIALS REQUIRED	3-13
3.2.4	GENERAL REPAIR REQUIRMENTS	3-13
3.2.5	DISASSEMBLY.	3-14
3.2.6	ASSEMBLY.	3-15
3.2.7	INSPECTION. INSPECT CPDU AS FOLLOWS:	3-15
3.2.8	FUNCTIONAL TEST	3-18
3.2.9	FAULT ISOLATION.	3-27
3.2.10	CPDU POWER SUPPLY MALFUNCTION ISOLATION.	3-28

3.2 CPDU ASSY, P/N AY6706709-0

3.2.1 General

The following paragraphs provide repair procedures and maintenance information for the CPDU Assy, P/N AY6706709-0. Source, maintenance and recoverability codes are listed below:

U.S. Army	PAODD
U.S. Marine Corps	PAOHD

3.2.2 Test Equipment and Special Tools Required

Test Equipment and special tools requirements are listed in Table 3-4. Unless otherwise specified, the test equipment and special tools listed below shall be used for testing the CPDU. Each commercially available item of test equipment can be replaced by equipment equivalent to that listed.

Table 3-4. Test Equipment and Special Tools Required

Nomenclature	Part/Spec. No.	Appendix C Figure 27 Item No.
DC Power Supply 0-40V 5A	Lambda, LLS-9040	24
Signal Generator	Wavetek, Model 178	41
Test equipment	RSL, P/N AY6708009-0	27
Digital Multimeter	Fluke, Model 77-2	5
Power test cable	RSL, P/N WA6709092-0	28
Electronic Equipment Tool Kit	PPL863	11
ESD Work Station Kit	M87893-02	13
CPDU Power Supply Test Cable	RSL, P/N WA6709094-0	29
Card Extractor	RSL, P/N AY9805117-0	21

3.2.3 Materials Required

Repair materials and other consumable item requirements are listed in Table 3-5.

Table 3-5. Materials Required

Nomenclature	Type/Part No.	Appendix F Item No.
Acetone	OA51	1
Acid Brush	H-B-643	6
Lint-Free Cloth	8722-0088	7
Methylethylketone	ASTM-D-740	14
Alcohol	TT-I-735A	4 and 24
Antistatic Bag	3271576	33

3.2.4 General Repair Requirements

The following general requirements apply to the repair of the CPDU.

CAUTION

This equipment contains assemblies subject to damage by electrostatic discharge. Use approved grounding procedures before touching, removing or inserting circuit card assemblies.

a. Ensure that connector is properly oriented before installing.

b. Make sure to attach gasket carefully to front panel.

c. Prevent damage to display glass.

d. Prevent damage to Keyboard gasket.

e. Make sure to disconnect CPDU from all cables before assembling and disassembling.

3.2.5 Disassembly

Refer to Figure 3-1. Disassemble CPDU as follows:

CAUTION

Ensure power to CPDU is turned off prior to disassembly.

CAUTION

The CPDU contains assemblies that are subject to damage by electrostatic discharge. Use approved grounding procedures before touching, removing, or inserting circuit card assemblies.

a. Loosen 10 captive screws (1).

b. Carefully separate CPDU cover (2) from front panel (3).

c. Loosen 4 screws (5).

d. Pull out PS Module (6) using card extractor P/N AY9805117-0 and place in antistatic bag.

e. Pull out MVP CCA (7) using card extractor P/N AY9805117-0 and place in antistatic bag.

f. Remove 8 screws (10) and 8 washers (11) securing card cage to front panel.

g. Loosen connector screws securing connectors P4 and P5 to motherboard.

h. Disconnect connectors P4 (8) and P5 (9) from motherboard.

i. Remove card cage.

3.2.6 Assembly

Refer to Figure 3-1. Assemble CPDU as follows:

CAUTION

The CPDU contains assemblies that are subject to damage by electrostatic discharge. Use approved grounding procedures before touching, removing or inserting circuit card assemblies.

NOTE

Before assembling cover, clean screw surface and screw thread with alcohol and MEK to avoid dirt or any other contamination and metal fragments.

a. Connect connectors P4 (8) and P5 (9) to motherboard and secure with connector screws.
b. Fasten card cage to front panel using eight screws (10) and eight washers (11).
c. Plug in PS Module (6).
d. Plug in MVP CCA (7).
e. Tighten four screws (5).
f. Ensure the gasket (4) is positioned properly. Attach CPDU cover (2) to front panel (3).
g. Tighten 10 captive screws (1).

3.2.7 Inspection

Inspect CPDU as follows:

a. Inspect all components for security of attachment.
b. Inspect all parts for damage, wear and deterioration.
c. Inspect connectors for broken, bent, recessed, loose, damaged or missing pins.
d. Inspect Keyboard gasket for tears, holes or other damage.
e. Inspect display window for scratches and nicks or other damage.
f. Repair or replace all faulty or damaged parts before performing functional test.

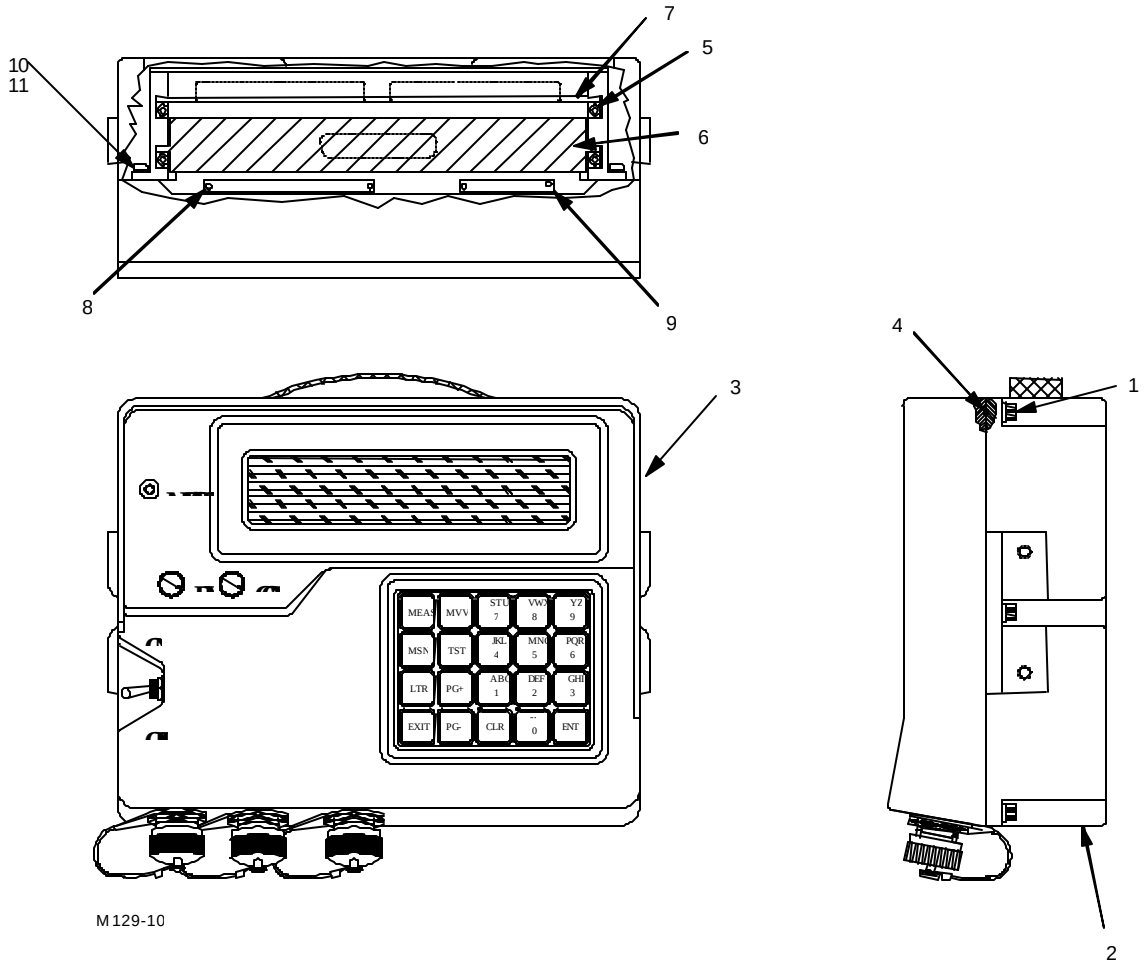

Figure 3-1. CPDU ASSY, P/N AY6706709-0 (Sheet 1 of 2)

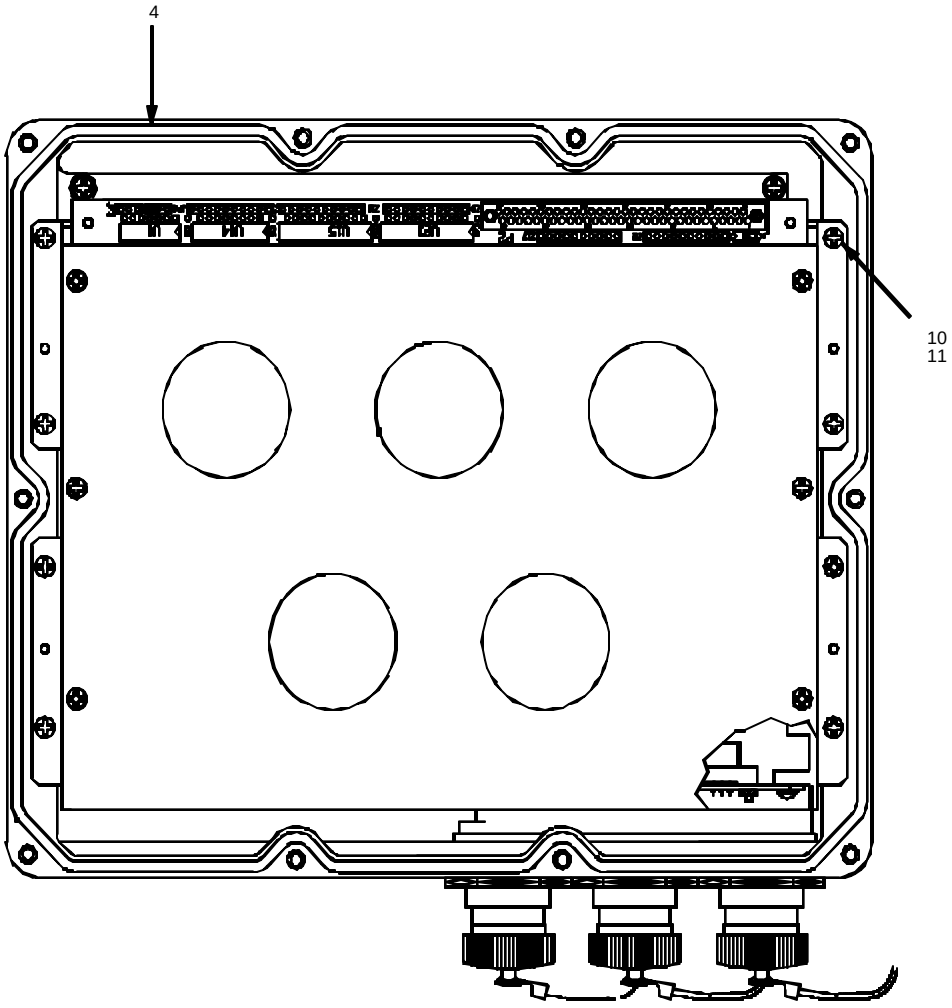

Figure 3-1. CPDU ASSY, P/N AY6706709-0 (Sheet 2 of 2)

3.2.8 Functional Test

The functional test setup for the CPDU is as shown in **Figure 3-2.** The CPDU is connected to a DC power supply using a test cable. This test cable shall be locally manufactured using the components defined in Figure 3-3. Figures 3-4 and 3-5 are detailed illustrations of the CPDU tester and its schematic. The DC power supply must be set to 28 ±0.1 VDC at the beginning of the test.

NOTE

If CPDU does not respond to Keyboard, Dimmer or Contrast during functional test, perform fault isolation procedures IAW para. 3.2.9.1 and 3.2.9.2. Otherwise, perform fault isolation procedures IAW para. 3.2.9.3.

a. Set ANT CABLE switch on test fixture to ON.

b. Set SIGNAL GEN switch to DOPP on test fixture.

c. Turn on CPDU and wait one second to allow BIT to finish.
Verify “MEASURE" LED comes on for approximately 1 second and then goes off.

d. Adjust contrast and illumination for best visual clarity.
Verify the following screen appears:

```
** Mission Data                    **Gun Screen
Howitz Type: WWWWWW Howitz No.:    HHHH
Tube No.: TTTTT          MM/DD/YY:mm/dd/yy
1-Edit          Pg+: Pjctl          Pg-: Prplt
```

e. Set ANT CABLE switch on test fixture to OFF.

f. On test fixture set SIGNAL GEN switch to ACCL.

g. Press **TST** key on CPDU to reveal TEST screen.

```
** Test **
1 - CPDU Test
2 - System Test
```

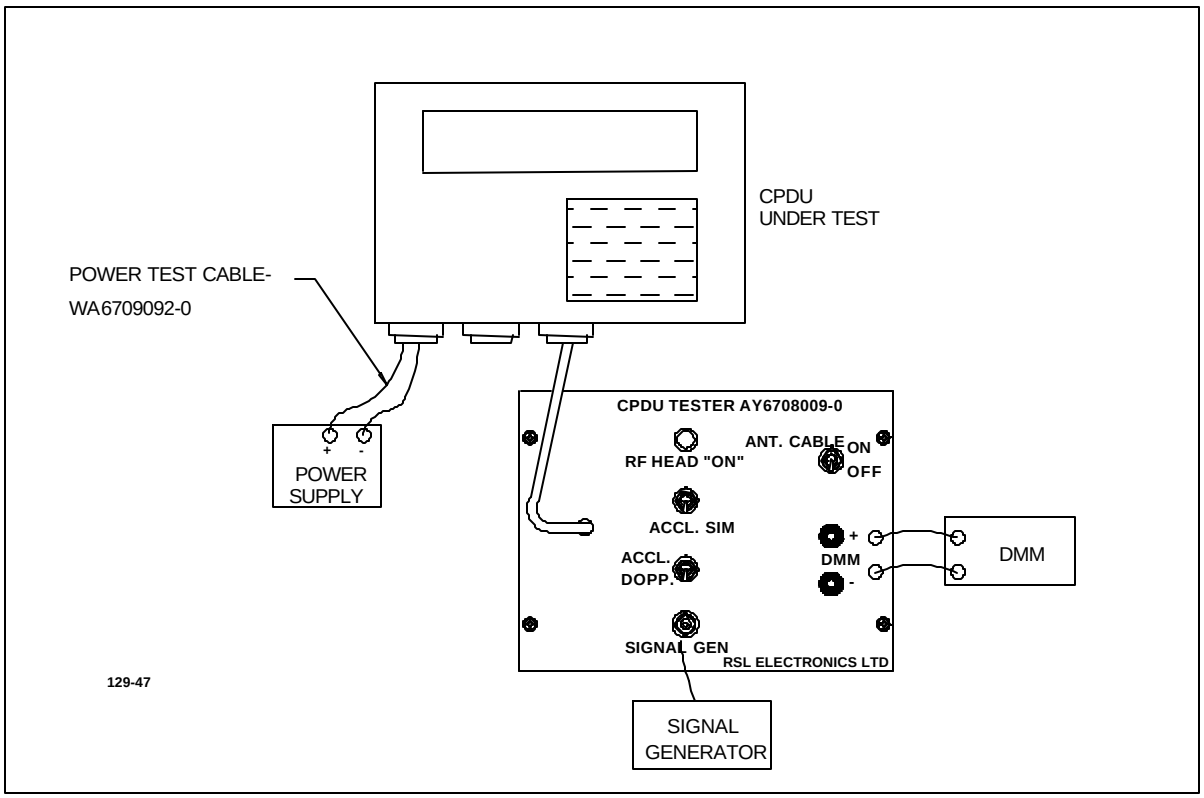

Figure 3-2. Functional Test Set-up

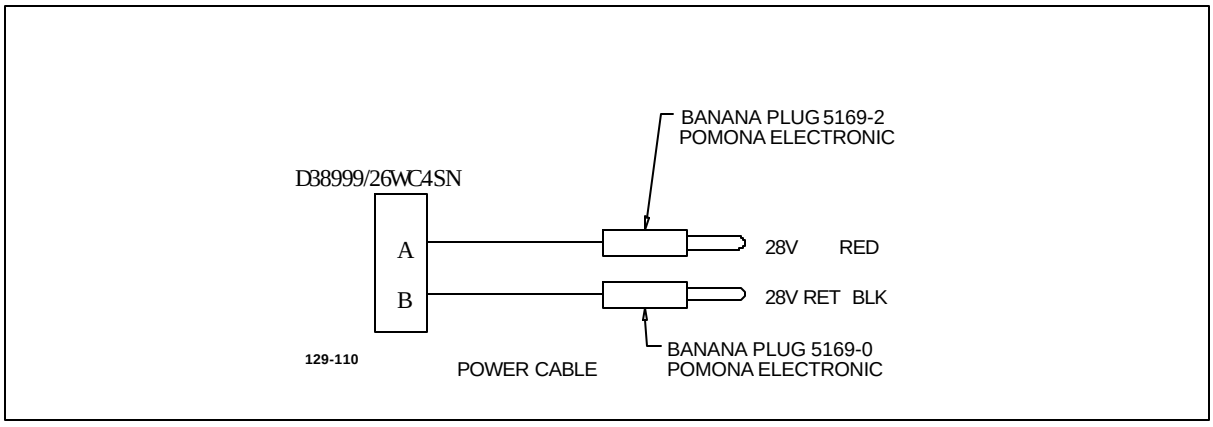

Figure 3-3. Test Power Cable, P/N WA6709092-0

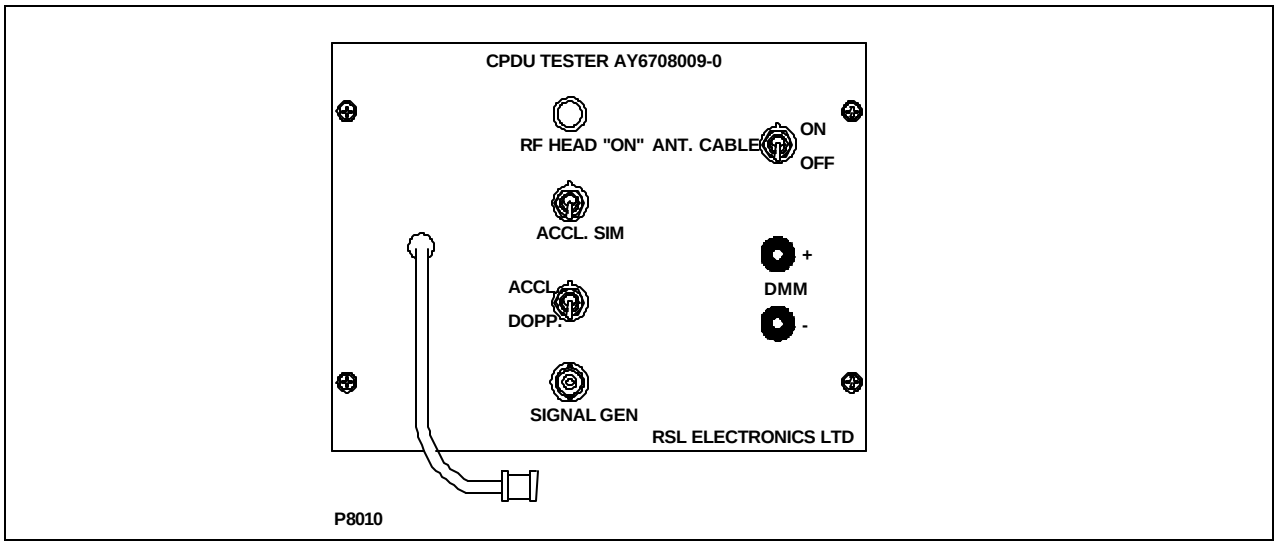

Figure 3-4.CPDU Tester, P/N AY6708009-0

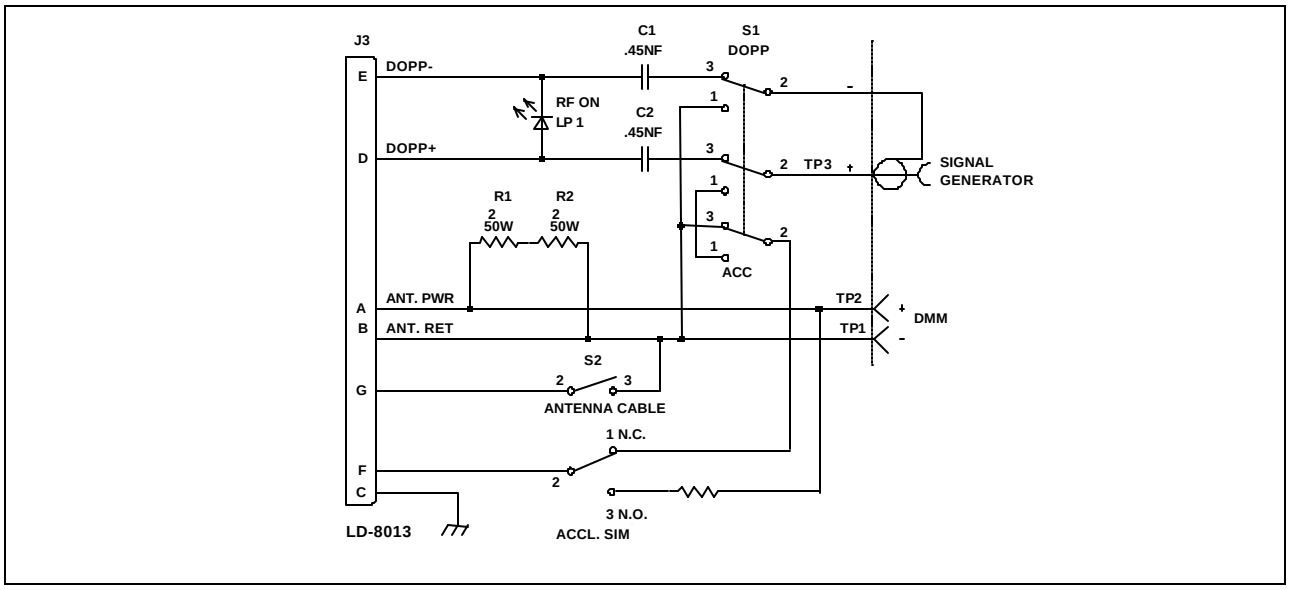

Figure 3-5. CPDU Tester Schematic Diagram

h. Press and hold ACCL SIM switch until completion of CPDU test, press **1** on CPDU to perform CPDU Test.

**** CPDU Status ****

Testing, Wait . . .

Verify malfunctions were detected. Verify message on screen:

**** CPDU Status ****

Failed

ANT CABLE ACCEL.

Press Any Key To Continue . . .

NOTE

Press any key except hot keys.

i. Release ACCL SIM switch on CPDU Tester. Set ANT CABLE switch on test fixture to ON. Set SIGNAL GEN switch to DOPP on test fixture.

j. Press any key on CPDU panel. CPDU TEST screen will appear.

**** CPDU Test ** ROM/EEROM Ver. X.Y/U.V**

1 – Display

2 – Keyboard

3 - Automatic Reset

k. Press **1** on CPDU panel. Display Test screen will appear.

!"#$%&'()*+,-./0123456789:;<=>?@ABCDEFGH

IJKLMNOPQRSTUVWXYZ[¥]~_´abcdefghijklmnop

qrstuvwxyz| } { ® ¬. PRESS ONCE TO DARKEN

DISPLAY, TWICE TO EXIT DISPLAY TEST.

l. Verify carefully that characters displayed by CPDU under test match screen shown above.

m. Press any key on CPDU panel. Verify display goes dark. Verify there are no bad fields on display.

n. Press any key on CPDU panel to return to CPDU TEST screen.

o. Press **2** on CPDU panel. KEYBOARD TEST screen will appear:

**** Keyboard Test ****

Press All Keys Sequentially And Verify.

You Pressed

Press EXIT Twice To End.

p. Press each key on keyboard twice. Verify after pressing each key that its name appears after the words: “YOU PRESSED".

q. Press **EXIT** twice and return to CPDU TEST screen.

r. Press **3** and verify that AUTOMATIC RESET TEST screen is displayed.

Testing Automatic Reset . . .

s. Verify that display goes blank after two seconds and system performs self test and MISSION DATA screen is displayed.

**** Mission Data **** **Gun Screen**

Howitz Type: WWWWWW Howitz No.: HHHH

Tube No.: TTTTT MM/DD/YY:mm/dd/yy

1-Edit Pg+: Pjctl Pg-: Prplt

t. Press **TST** key. The following TEST screen will appear.

```
** Test **
1 - CPDU Test
2 - System Test
```

u. Press **2**. Verify SYSTEM TEST screen will appear. Verify on DMM voltage measured is 29.8±0.6 VDC.

```
** System Test **
Activate Doppler Simulator In Front
Of Antenna. Press ENT To Measure And
Verify MV (712 ± 50):0000.0
```

v. Turn on signal generator.

w. Set signal generator to sine wave (50 KHz±100 Hz), 8 Vp-p.

x. Press **ENT**. Verify MV is 712±50 m/sec.

y. Press **MSN** key. GUN screen will appear.

```
** Mission Data **          Gun Screen
Howitz Type: WWWWWW Howitz No.:  HHHH
Tube No.: TTTTT          MM/DD/YY:mm/dd/yy
1-Edit          Pg+: Pjctl          Pg-: Prplt
```

z. Enter the following mission data IAW para. 2.7.

Howitz Type	-	M109A1
Howitz No.	-	1234
Tube No.	-	5678
MM/DD/YY	-	actual date
Pjctl Type	-	M449A1
Wt	-	4 squares
Fuze	-	M577
Prplt Type	-	M3A1
Chg	-	1G
Lot	-	0123456789ABCDEF
Temp	-	77.0 F

ab. Press **MSN** key and verify mission data.

**** Mission Data ****	**Gun Screen**
Howitz Type: M109A1	**Howitz No.: 1234**
Tube No.: 5678	**MM/DD/YY:mm/dd/yy**
1-Edit	**Pg+: Pjctl** **Pg-: Prplt**

ac. Press **PG+.** PROJECTILE screen will appear.

**** Mission Data**	****Projectile Screen**
Pjctl Type: M 449A1	**Wt: 4 Squares**
Fuze: M577	
1-Edit	**Pg+: Prplt** **Pg-: Gun**

ad. Press **PG+**. PROPELLANT screen will appear.

**** Mission Data**			****Propellant Screen**
Prplt Type: M3A1			**Chg:1G**
Lot:	**0123456789ABCDEF**	**Temp:**	**77.0 F**
1-Edit	**Pg+:**	**Gun**	**Pg-: Pjctl**

ae. Set signal generator to sine wave (14.5 KHz±1 Hz).

af. Press **MEAS** key. MV MEASURE screen will appear.

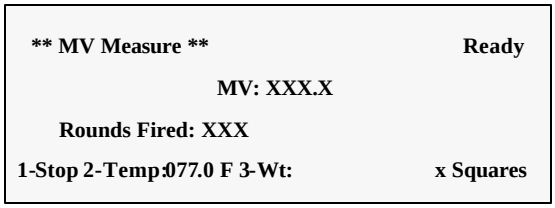

ag. Momentarily push ACCL SIM toggle switch on test fixture.

ah. Verify MEASURE LED on CPDU and RF HEAD ON LED on test fixture light for approximately 1 second. Verify measured MV is 206.46±1 m/sec.

ai. Press **MSN** key. GUN Screen will appear.

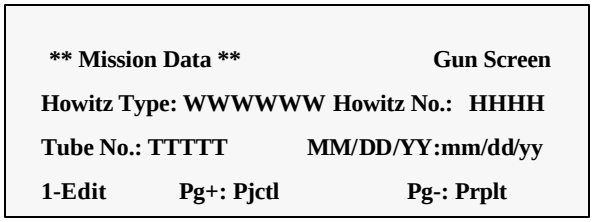

aj. Enter the following mission data IAW para. 2.7.

Howitz Type	-	M109A5
Howitz No.	-	1234
Tube No.	-	5678
MM/DD/YY	-	actual date
Pjctl Type	-	M549A1
Wt	-	4 squares
Fuze	-	M557
Prplt Type	-	M203
Chg	-	8R
Lot	-	0123456789ABCDEF
Temp	-	77.0 F

ak. Press **MSN** key and verify mission data.

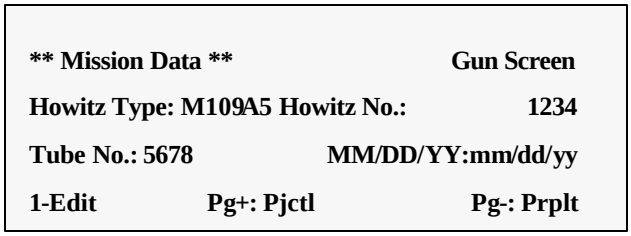

al. Press **PG+**. PROJECTILE screen will appear.

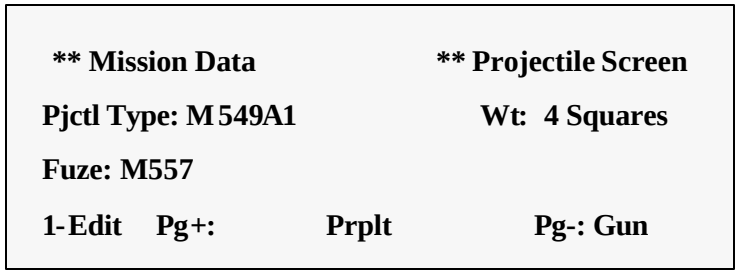

am. Press **PG+**. The following screen will appear:

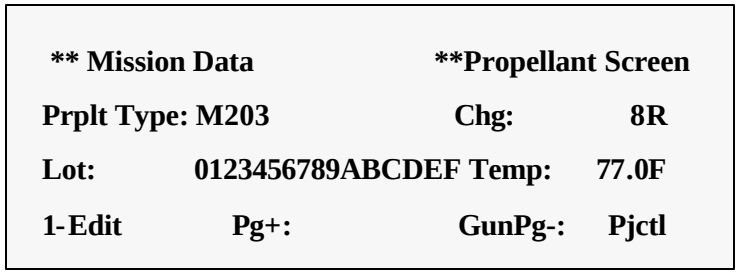

an. Set signal generator to sine wave (57.5 KHz±100 Hz).

ao. Press **MEAS** key. MV MEASURE screen will appear.

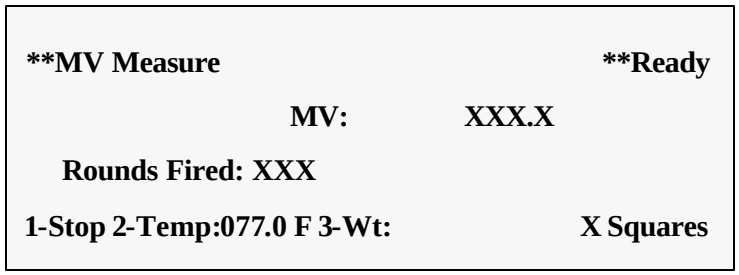

ap. Momentarily push ACCL SIM toggle switch on test fixture.

aq. Verify MEASURE LED on CPDU is lighted. Verify RF HEAD ON LED on test fixture is lighted. Verify measured MV is 818±5 m/sec.

ar. Set signal generator to: pulse, manual trigger, output voltage 0-0.5 V low 4.5-5 V high.

as. Set pulse width to 100±10 µsec.

at. Set SIGNAL GEN switch to ACC on test fixture.

au. Press MEAS key on CPDU.

av. Manually trigger signal generator, and verify that:

1. On test fixture and on CPDU the red led is lighted for approximately two second.
2. No ERROR message or MV measurement are displayed on CPDU display.

aw. Turn CONTR knob on CPDU fully CCW for all segments of display lights to go off and fully CW for lights to go on.

ax. Verify all segments of display lights go on and then go off.

ay. Turn DIM knob on CPDU CCW and CW. Verify light intensity is varying continuously.

az. End of test.

3.2.9 Fault Isolation

IIf CPDU does not respond to Keyboard, Dimmer or Contrast, refer to para. 3.2.9.1 and 3.2.9.2. For fault isolation during Functional Test (para. 3.2.8) refer to para. 3.2.9.3.

3.2.9.1 Display Contrast Adjustment/Dimmer (DIM) Control

If DIM/Contrast knob has no effect on display, troubleshoot CPDU until problem is resolved as follows:

a. Replace CPDU Power Supply IAW para. 3.2 and retest.
b. Troubleshoot Harness Assy IAW para. 3.18 and retest.
c. Replace Display Module.

3.2.9.2 CPDU Does Not Respond To Key Strokes

a. Verify that a valid key was pressed.
b. Perform CPDU OFF/ON procedure (see para. 2.6).
c. If there is still a failure, the problem is in the CPDU.
d. Perform steps 5 thru 8 as needed until problem is resolved.
e. Replace MVP CCA (para. 3.2.5) and perform Keyboard Test (para. 3.5).
f. Troubleshoot Harness Assy IAW para. 3.18.9.1 and perform Keyboard Test (para. 3.5).
g. Replace Keyboard and perform Keyboard Test (para. 3.5).
h. Replace Motherboard CCA (para. 3.7).

3.2.9.3 Fault Isolation during Functional Test

Refer to Table 3-6 to determine which part of the CPDU is the most probable cause for malfunction. If the malfunction is not corrected, replace (one at a time) and troubleshoot the following units: MVP CCA, CPDU Power Supply, Front Panel.

Table 3-6. Fault Isolation

Fault at Steps of para. 3.2.8	Most Probable Fault Location
c. thru k. s. thru av.	Inspect and replace MVP CCA. Refer to para. 3.2.5.
No response. No light, or two rows on display v	Inspect Power Supply CCA and replace if necessary. Refer to para. 3.2.5.
l., m., n. Incorrect information displayed	Inspect and replace Display Module. Refer to para. 3.9.
p., q., r., g.	Inspect and replace Keyboard. Refer to para. 3.5.
aw., ax., ay.	Inspect Front Panel Assy and CPDU Power Supply. Refer to para. 3.16.

If the above troubleshooting procedure does not resolve the malfunction, perform troubleshooting procedures for Mother Board CCA, P/N AY6706706-0 (para. 3.7) and Harness Assy, P/N WA6706707-0 (para. 3.18).

3.2.10 CPDU Power Supply Malfunction Isolation

The CPDU Power Supply is tested using cable as shown in Figure 3-6. This test cable shall be locally manufactured using components defined in Figure 3-6.

a. Remove Power Supply Module IAW para. 3.2.5.

b. Connect CPDU power supply test cable to Power Supply Module. Refer to **Figure 3-6A.**

c. Adjust external power supply to 28±0.3 VDC. Connect power supply to pin 3 (+) and pin 2 (-).

d. Turn on external power supply.

e. Perform tests in Table 3-7 using digital multimeter (DMM).

Table 3-7. Power Supply Malfunction Isolation

Test No.	Test Connection	Normal Value	Faulty SRU
1	Connect DMM to Pin 18 (+) and pin 37 (-) of PS using test cable	5±0.1 VDC	Power Supply
2	Connect DMM to Pin 35 (+) and pin 33 (-) of PS using test cable	+15±0.6 VDC	Power Supply
3	Connect DMM to Pin 34 (+) and pin 33 (-) of PS using test cable	-15±0.6 VDC	Power Supply
4	Connect DMM to Pin 25 (+) and pin 24 (-) of PS using test cable	27±1 VDC	Power Supply
5	Verify ANT S.D. switch is open. Connect DMM to pin 8 (+) and pin 7 (-) of PS using test cable	0±0.1VDC	Power Supply
6	Close ANT S.D. switch. Connect DMM to pin 8 (+) and pin 7 (-) of PS using test cable	29±1.5 VDC	Power Supply

NOTE

ANT S.D. is ANTENNA SHUT DOWN control.

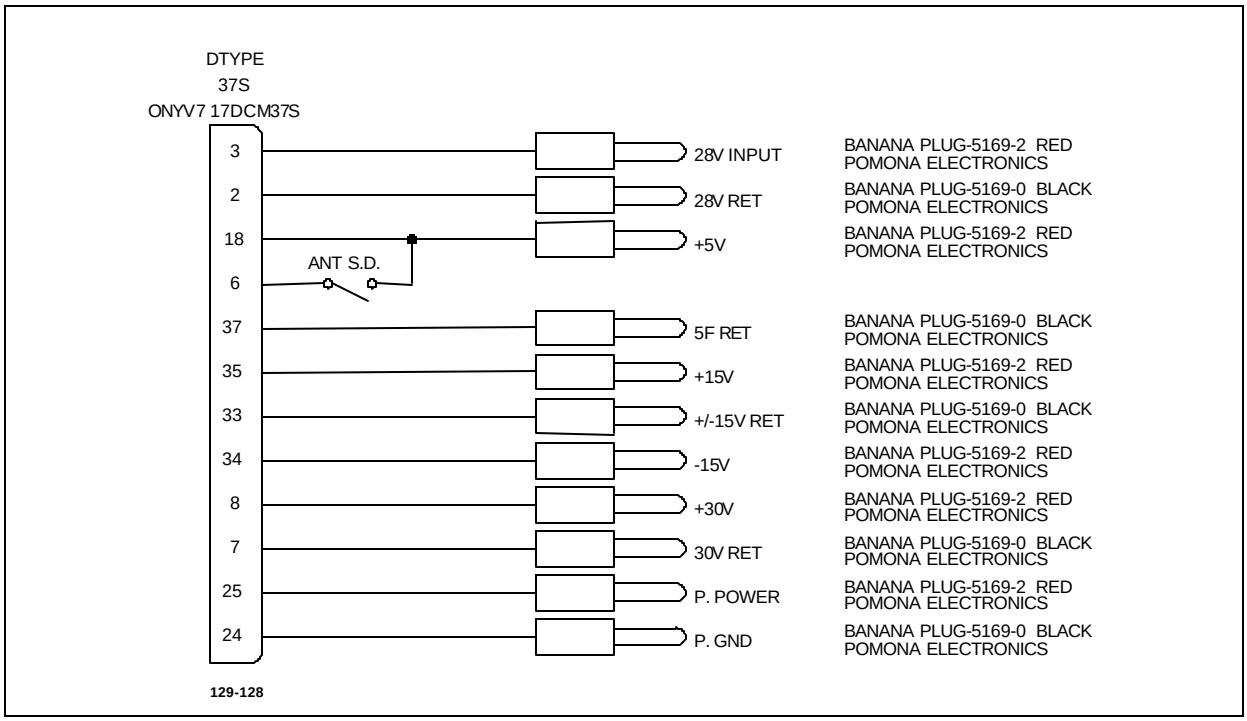

Figure 3-6. CPDU PS Test Harness, P/N WA6709094-0

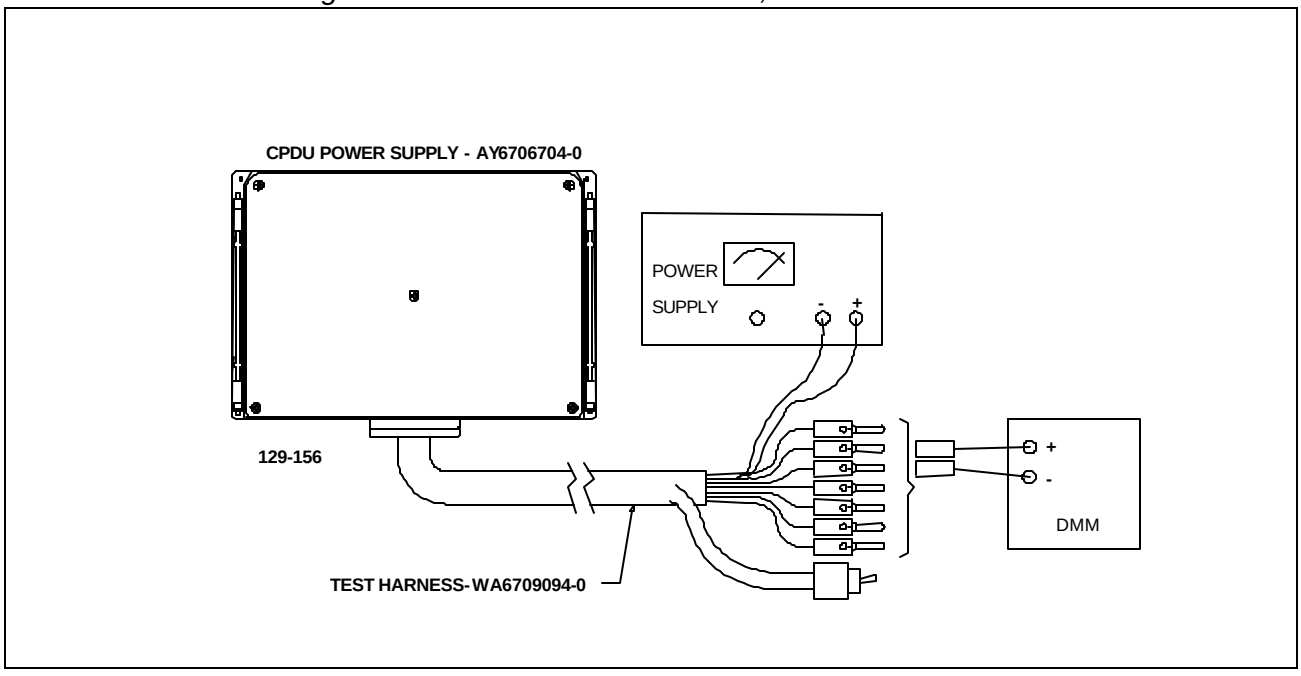

Figure 3-6A. CPDU PS Test Set-up

SECTION III. TRANSCEIVER ASSY, P/N'S AY6706571-0 AND AY6706571-2

SECTION CONTENTS

Page

3.3 TRANSCEIVER ASSY, P/N AY6706571-0, AY6706571-2 3-30
3.3.1 GENERAL. 3-30
3.3.2 TEST EQUIPMENT AND SPECIAL TOOLS REQUIRED. 3-31
3.3.3 MATERIALS REQUIRED. 3-31
3.3.4 GENERAL REPAIR REQUIREMENTS. 3-32
3.3.5 TRANSCEIVER ASSY DISASSEMBLY. 3-33
3.3.6 TRANSCEIVER ASSY ASSEMBLY. 3-38
3.3.7 VISUAL INSPECTION. 3-39
3.3.8 TRANSCEIVER ASSY TROUBLESHOOTING. 3-39
3.3.9 TRANSCEIVER ASSY MAJOR SRU FAULT ISOLATION. 3-43

3.3 TRANSCEIVER ASSY, P/N AY6706571-0, AY6706571-2

3.3.1 General

The following paragraphs provide repair procedures and maintenance information for the Transceiver Assy, P/N AY6706571-0, AY6706571-2. Source, maintenance and recoverability codes are listed below:

Description	Part No.	U.S. Army	U.S. Marine Corps
Transceiver Assy	AY6706571-0, AY6706571-2	PAODD	PAOHD
Transceiver	AY6706557-0	PADDD	PAFFF
RF Cable	WA6706563-0	PADZZ	PAFZZ
Gasket	MP6706570-0	PADZZ	PAFZZ

3.3.2 Test Equipment and Special Tools Required

Test equipment and special tools requirements are listed in Table 3-8. Unless otherwise specified, the test equipment and special tools listed below will be used for testing the Transceiver Assy. Each commercially available item of test equipment can be replaced by equipment equivalent to that listed.

Table 3-8. Test Equipment and Special Tools Required

Nomenclature	Part/Spec No.	Appendix C Figure 27 Item No.
Current meter	Fluke, Model 77-2	5
Digital Multimeter	Hewlett Packard, Model 3478A	43
Electronic Tools Kit	PPL863	11
Power Supply (0-30 V, 3 A)	Lambda, LK-342-A-FM	30
Power Supply (0-18 V, 3 A)	Lambda, LLS-5018	31
Doppler Simulator	RSL, P/N AY6706690-0	22
Microwave Frequency Counter	EIP, Model 535	26
Standard Gain Horn	Narda, Model 640	18
Transceiver Test Cable	RSL, P/N WA6709097-0	32
SMA Female/SMA Female	Midwest Microwave 2595	40
Linear PS Test Cable	RSL, P/N WA6709098-0	33
Torque Wrench 8 in. lbs 5/16"	M/A COM 2098-0275-54	41
Oscilloscope	Hewlett Packard, Model 1070B	44

3.3.3 Materials Required

Repair materials and other consumable items required are listed in Table 3-9.

Table 3-9. Materials Required

Nomenclature	Part/Spec No.	Appendix F Item No.
Paint	Color No. 383 IAW FED-STD-595 CARC	35
Sealant	83-31	16
Primer	747-55	17
Solder	SN63WRMAP3	23
Adhesive	RTV732	34
Acetone	0A51	1
Bus wire	QQ-W-343/S-22-S1T	29
Methylethylketone	ASTM-D-740	14
Antistatic Bag	3271576	33
Insulation Compound	MILI46058TYPE1B31	9

3.3.4 General Repair Requirements

The following general requirements apply to repair of the Transceiver Assy:

a. General.
The transceiver does not contain high voltages or hazardous material. The transceiver radiates low-power X-band microwave energy, therefore RF safety precautions should be taken.

b. RF safety.
The transceiver radiates microwave energy at approximately 1 $m\Omega/cm^2$ power density at the antenna surface. Maximum safe level is 10 $m\Omega/cm^2$ IAW safety level of electromagnetic radiation with respect to personnel. The radar output field does not exceed the safety levels required by ANSI C95.1-1982, hazard for humans, by electromagnetic fields at normal or malfunction operation conditions. The transceiver output power is less than 220 mΩ, which is at any time three orders of magnitude below the requirements of MIL-STD-1358B. Although transmitted power density is less than the safety level, comply with the following warning when the transceiver is transmitting:

WARNING

Do not point the radiating surface towards any personnel. Do not bring eyes to close contact with the radiating surface. Use absorbing materials in front of the radiating surface whenever possible.

CAUTION

This equipment contains assemblies subject to damage by electrostatic discharge. Use approved grounding procedures before touching; removing or inserting printed wiring assemblies.

NOTE

Exercise extra caution while handling the Transceiver and its electrical terminal. Use grounding strap on both hands.

c. Do not assemble Transceiver Assy or covers for at least 24 hours after applying RTV adhesive to internal elements or Transceiver Assy gasket.

d. Use torque wrench 2098-0275-54 (mfr M/A COM) when handling the RF Cable WA6706563 for final tightening. Do not over torque!!

e. Tag and identify wires before disconnecting.

f. Use only SN63WRMAP3 tin/lead solder.

g. Apply uniform coating MILI46058TYPE1B31 insulation compound after soldering of wires.

h. Verify that screws are fully secured with lockwashers before final assembly. Also verify that the transceiver is clean from any residues of solder or foreign objects.

3.3.5 Transceiver Assy Disassembly

3.3.5.1 Separation of Bracket

Refer to **Figure 3-7.** Separate Bracket Assy from Transceiver Assy as follows:

a. Remove four hex key screws (1) and four lockwashers (2) using 5-mm hex key wrench.

b. Separate Bracket Assy (3) from Transceiver Assy (4).

3.3.5.2 Separation of Transceiver Assy (Refer to **Figure 3-7A**)

CAUTION

Separate the two halves of the Antenna Transceiver Assembly carefully to prevent damage to wiring harness attached to ***both*** halves.

a. Loosen six hex key captive screws (2).

b. Carefully separate Transceiver Assy (1) into two halves.

3.3.5.3 Removal of Transceiver

Refer to **Figure 3-8**. Remove Transceiver as follows:

a. Remove RF Cable (1) IAW para. 3.3.5.4.

b. Remove six screws (2) and attaching parts which attach Transceiver to antenna base.

c. Short circuit Transceiver detector output using bus wire.

(First connect wire to ground lug and then to detector output.)

CAUTION

Detector output must be grounded at all times

d. Disconnect one wire from detector output and two from the ground lug.

e. Disconnect three wires from oscillator input.

f. Remove Transceiver (3) and place it in antistatic bag. Do not remove shorting bus wire.

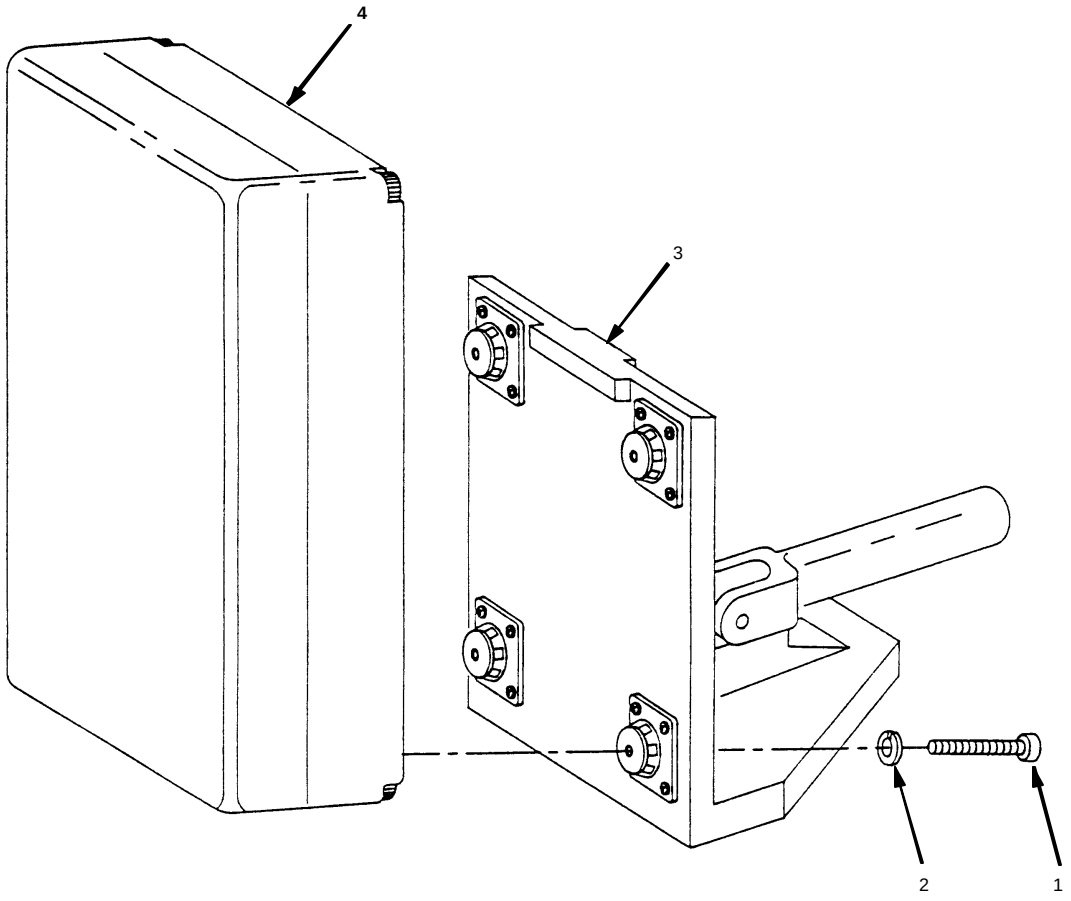

Figure 3-7. Transceiver Assy, P/N AY6706571 - Bracket Separation

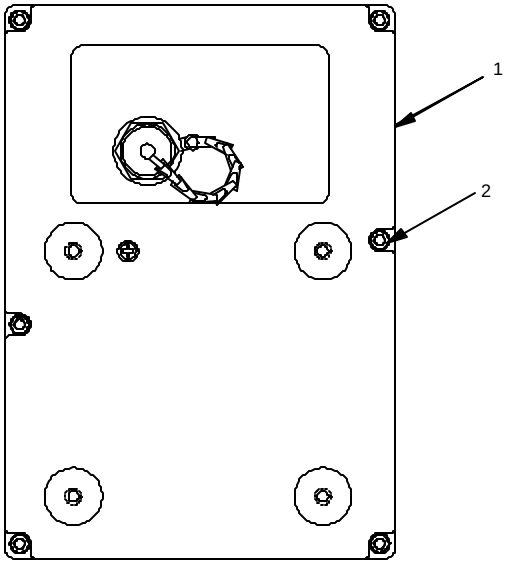

REAR VIEW

Figure 3-7A. Transceiver Assy

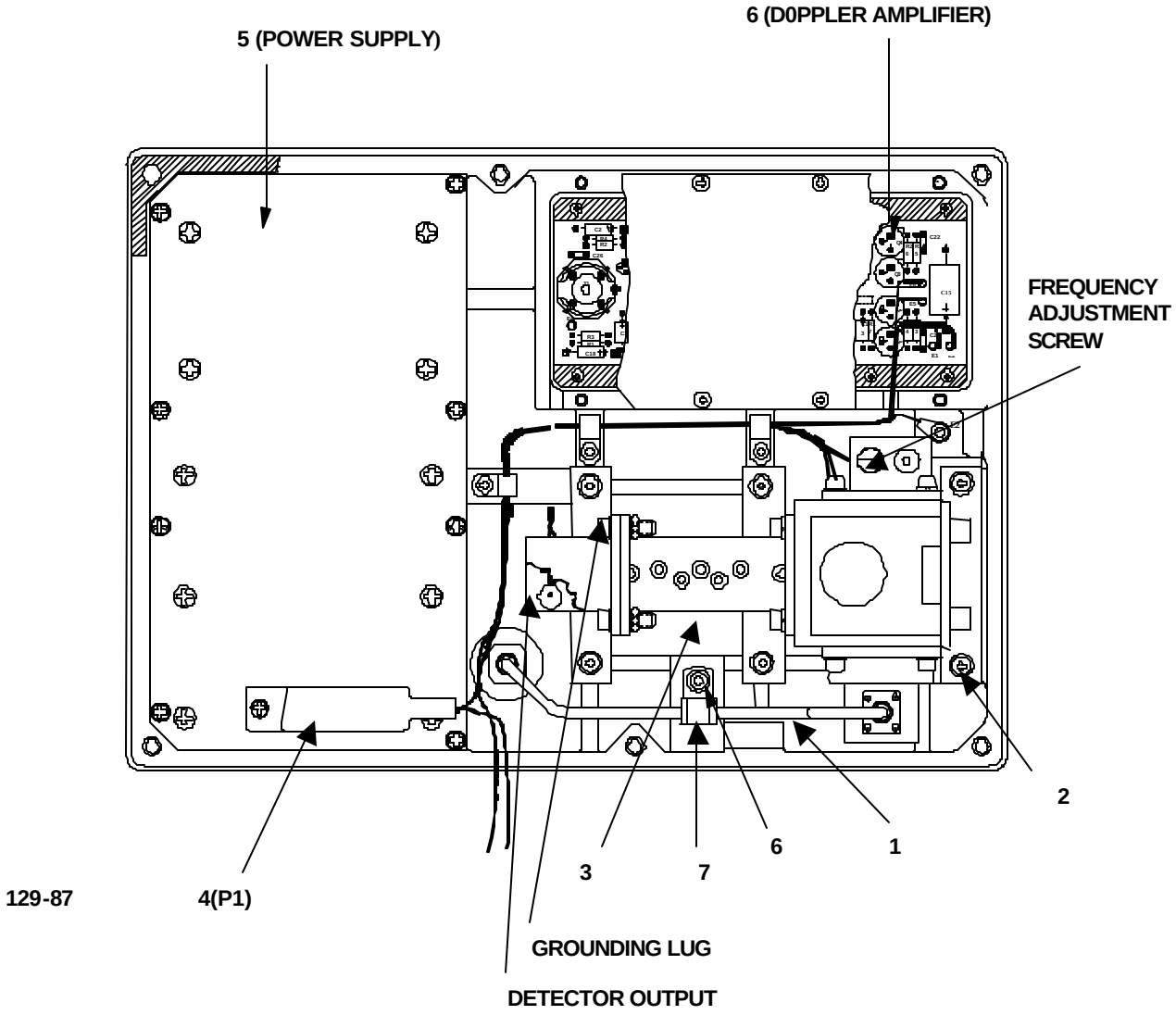

Figure 3-8. Transceiver Assy Open View

3.3.5.4 Removal of RF Cable

Refer to **Figures 3-8 and 3-9**. Remove RF Cable as follows:

3.3.5.4.1 Configuration AY6706571-0

a. Remove screw (6) and attaching parts which hold the clamp (7). Leave clamp (7) on RF Cable (1).
b. Loosen two SMA connectors using 5/16" hex nut wrench.
c. Unscrew two SMA connectors and remove RF Cable (1).
d. Remove clamp (7) from RF Cable (if required).

3.3.5.4.2 Configuration AY6706571-2

a. Loosen two SMA connectors ofthe RF cable (1) using 5/16" hex wrench.
b. Unscrew two SMA connectors and remove RF cable (1).

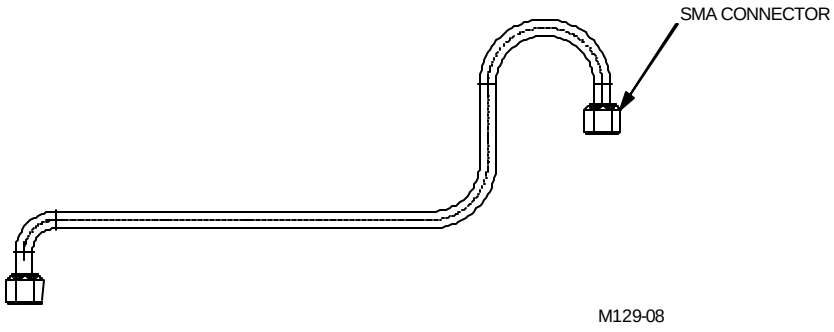

Figure 3-9. RF Cable, P/N AY6706563-0

3.3.5.5 Removal of Gasket MP6706570-0

a. Gently peel gasket away from surface of Transceiver Assy housing.

b. Remove remaining gasket with a soft hand tool in order not to nick or scratch housing surface.

3.3.6 Transceiver Assy Assembly

3.3.6.1 Installation of Gasket

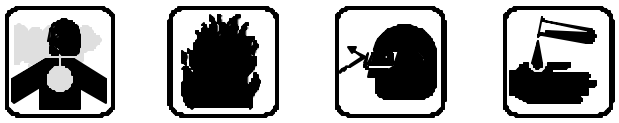

WARNING

Use MEK in a well ventilated area. Avoid breathing vapors. Keep away from flame.

a. Clean and remove all residue of RTV from Transceiver Assy housing. Use an acid brush moistened with MEK solvent.

CAUTION

Do not accelerate RTV curing by heating.

b. Apply adhesive RTV732 (clear) all around in uniform thickness. Place gasket on housing using sufficient pressure to displace air but not adhesive. Remove excess adhesive.

3.3.6.2 Installation of Transceiver (Refer to **Figure 3-8**)

a. Reconnect two wires to oscillator input.

b. Reconnect wire to detector output.

c. Install Transceiver (3) into Transceiver Assy.

d. Fasten six screws (2) and attaching parts attaching Transceiver (3) to antenna base.

e. Disconnect the shorting wire from detector. First disconnect from detector output and then from ground.

f. Reinstall RF Cable to Transceiver RF output and Microstrip Antenna Connector. Refer to para. 3.3.6.3.

3.3.6.3 Installation of RF Cable (Refer to **Figures 3-8 and 3-9**)

3.3.6.3.1 Configuration AY6706571-0

a. Install clamp (7) on RF Cable (1).
b. Install RF Cable and hand tighten two SMA connectors.
c. Tighten two SMA connectors using 5/16" wrench and torque to 8 in. lb.
d. Fasten screw (6) and attaching parts of clamp (7).

3.3.6.3.2 Configuration AY6706571-2

a. Install RF cable (1) into its groove on the transceiver assembly.
b. Hand tighten two SMA connectors of RF cable (1) to transceiver (3) and antenna connector.
c. Fasten two SMA connectors of the RF cable (1) using 5/16" hex wrench.

3.3.6.4 Assembly of Transceiver Assy (Refer to **Figure 3-7A**)

a. Attach two halves of Transceiver Assy (1).
b. Fasten six hex key captive screws (2).

3.3.6.5 Assembly of Bracket (Refer to **Figure 3-7).**

a. Attach Bracket Assy (3) to Transceiver Assy (4).
b. Fasten four hex key screws (1) and lockwashers (2) using 5-mm hex key wrench.

3.3.7 Visual Inspection

Inspect Transceiver Assy as follows:

a. Inspect all components for security of attachment.
b. Inspect all parts for damage, wear and deterioration.
c. Inspect connectors for broken, bent, recessed, loose, damaged or missing pins.
d. Inspect transceiver for tears, holes or other damage.
e. Repair or replace all faulty or damaged parts before performing functional check.

3.3.8 Transceiver Assy Troubleshooting

3.3.8.1 Transceiver ASSY Troubleshooting Setup

The test setup for the Transceiver Assy is as shown in Figure 3-10. The Transceiver Assy is connected using a test cable as shown in Figure 3-11. This test cable shall be locally manufactured using the components defined in Figure 3-11.

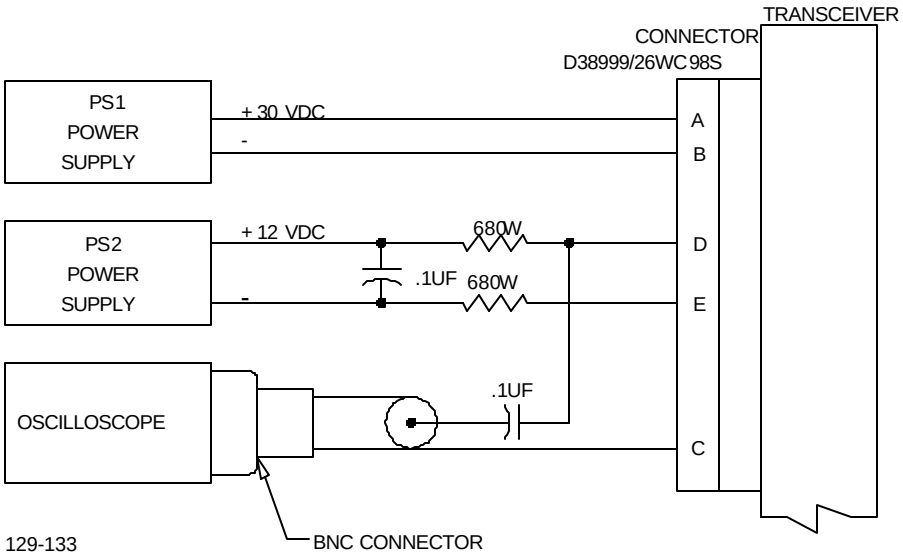

Figure 3-10. Transceiver Assy Test Set-up

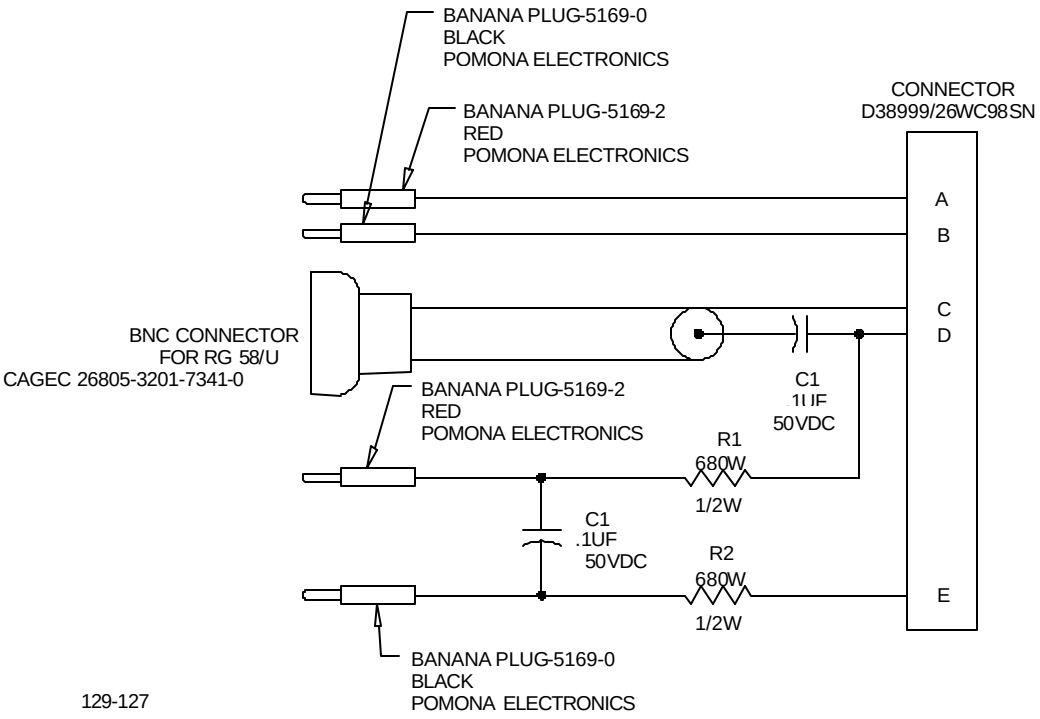

Figure 3-11. Transceiver Assy Test Harness, P/N WA6709097-0

3.3.8.2 Transceiver Assy Malfunction Isolation

A preliminary malfunction isolation is to be performed in order to establish if the Transceiver Assy is faulty. If so, a determination must be made as to whether the fault lies in the Transceiver, Power Supply, or the Doppler Amplifier.

3.3.8.3 Transceiver Assy Basic Performance Test

a. Using test cable, connect Transceiver Assy as shown in **Figure 3-10.**

b. Perform the tests as defined in Table 3-10.

NOTE

If Transceiver Assy is malfunctioning, refer to Power Supply, Doppler Amplifier or Transceiver tests for fault verification (para. 3.3.9.2, 3.3.9.3, 3.3.9.4).

Table 3-10. Transceiver Assy Basic Performance Test

Test No.	Test	Expected value	Component Faults
1	Adjust PS1 to 30±1 VDC. Connect PS1 to test cable and operate. Verify current of PS1 power supply	Less than 100 mA and more than 20 mA	1. Transceiver Power Supply 2. Doppler Amplifier
2	Adjust PS2 to 12 VDC. Connect PS2 to test cable and operate. Verify current of PS1 power supply.	Less than 900 mA and more than 500 mA	1. Transceiver Power Supply 2. Doppler Amplifier 3. Transceiver Harness
3	Connect BNC connector of test cable to oscilloscope. Verify broad-band noise of 2 Vp-p max, 0.5 Vp-p min	Broad-band noise of 2 Vp-p max and 0.5 Vp-p min	1. Doppler Amplifier 2. Transceiver Power Supply
4	Place Doppler Simulator in front of Transceiver Assy and operate. Verify on oscilloscope square wave of 12 Vp-p min at approx 50 KHz	Square wave 12 Vp-p min, 50 KHz	1. Doppler Amplifier
5	Operate microwave frequency counter. Connect standard horn using RF Cable to microwave freq counter. Point horn to Transceiver Assy. Verify transmitted power at frequency of 10,525±1 MHz	10,525±1 MHz	1. Transceiver tuning
6	Turn off PS2 power supply. Turn off PS1 power supply. Disconnect test cable		END OF TEST

3.3.9 Transceiver Assy Major SRU Fault Isolation

This section describes the tests to be performed in order to isolate the faulty SRU within the Transceiver Assy.

CAUTION

The Transceiver Assy is susceptible to electrostatic discharge. Handling of the transceiver electronic assembly and transceiver should be performed at a static-free station and with grounded measurement instruments.

3.3.9.1 Test Set-up

a. Open Transceiver Assy IAW para. 3.3.5.2.

b. Connect Transceiver Assy IAW **Figure 3-10** using test cable as shown in Figure 3-11.

3.3.9.2 Transceiver Power Supply Fault Verification

The test setup for the Transceiver Power Supply is as shown in Figure 3-12A. The power supply is tested using cable as shown in Figure 3-12. This test cable may be locally manufactured using components defined in Figure 3-12. Refer to Figure 3-8 for location of components.

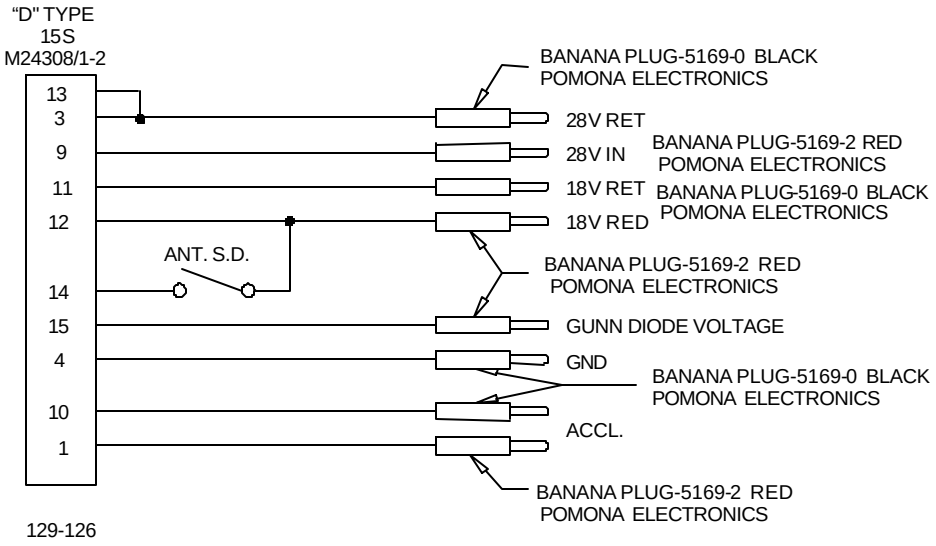

Figure 3-12. Transceiver PS Test Harness, P/N WA6709098-0

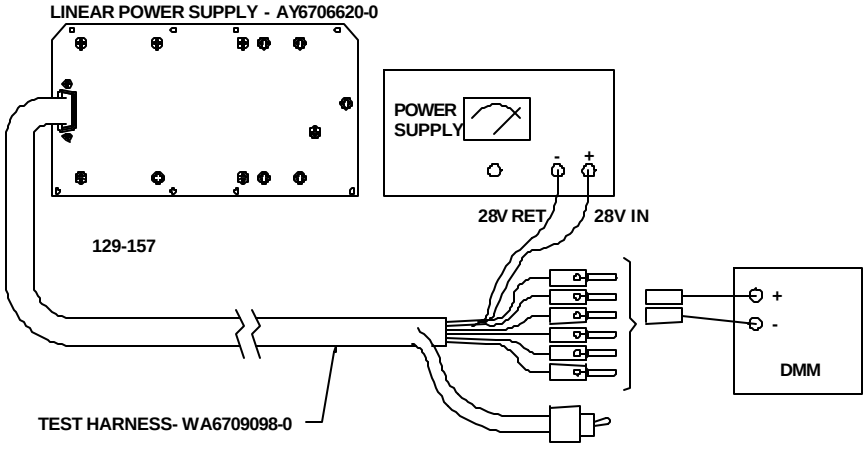

Figure 3-12A. Transceiver PS Test Set-up

a. Disconnect P1 (4) (type 15S) from Power Supply Module.

b. Connect transceiver power supply test cable to Power Supply Module (5). See Figure 3-12A.

c. Connect external power supply to pin 3(-) and pin 9(+). Adjust to 28 VDC.

d. Turn on external PS.

e. Perform test IAW Table 3-11 using a digital multimeter (DMM).

Table 3-11. Transceiver PS Malfunction Isolation Test

Test No.	Test	Expected value	Component Faults
1	Connect DMM to pin 11(-) and pin 12 (+) of Transceiver PS test cable.	18±0.9 VDC	Power Supply. Refer to para. 3.9
2	Verify ANTENNA Shut Down (ANT S.D.) switch is open. Connect DMM to pin 15(+) and pin 4(-) of Transceiver PS test cable.	0±0.2 VDC	Power Supply. Refer to para. 3.9
3	Close ant S.D. switch.	V±0.5 VDC is the voltage recorded on the Transceiver	Power Supply. Refer to para. 3.9
4	Set DMM to resistance measurement. Connect DMM to pin 10 and pin 11 of Transceiver PS test cable.	5 ohm maximum	Power Supply. Refer to para. 3.9

WARNING

Do not point the radiating surface towards any personnel. Do not bring eyes to close contact with the radiating surface. Use absorbing materials in front of the radiating surface whenever possible.

CAUTION

The Transceiver Assy is susceptible to electrostatic discharge. Handling of the transceiver electronic assembly and transceiver should be performed at a static-free station and with grounded measurement instruments.

CAUTION

Exercise extra caution while handling the Transceiver and its electrical terminal. Use grounding strap on both hands.

3.3.9.3 Doppler Amplifier Fault Verification

a. Remove Doppler Amplifier cover IAW para. 3.8.5.

b. Activate Doppler Simulator in front of antenna radiating surface.

c. Turn on power supplies PS1 and PS2.

d. Connect oscilloscope ground lead to transceiver chassis.

e. Output signal: using oscilloscope AC mode, verify following waveforms on terminals E5 (1) and E6 (2) of Doppler Amplifier CCA (see **Figures 3-13 and 3-14**).

f. Output noise: turn off Doppler Simulator. Use oscilloscope to verify broad-band noise of 2 V maximum at terminals E5 and E6 of Doppler Amplifier CCA.

g. Malfunction isolation IAW Table 3-12.

Table 3-12. Doppler Amplifier Test

Case	Output Signal	Output Noise	Component Fault
1	None	None	Doppler Amplifier
2	None	Less than 0.5 Vp-p	Transceiver
3	A few volts p-p	Less than 0.5 Vp-p	Doppler Amplifier
4	Output voltage is less than 12 Vp-p or waveform is distorted	Less than 1 Vp-p	Doppler Amplifier
5	Output voltage is 12 Vp-p or more	More than 2 Vp-p	Transceiver

3.3.9.4 Transceiver Fault Verification

Refer to Figures 3-8 and 3-15.

NOTE

Failure of the Transceiver to provide the RF power or to be adjusted to the frequency requirement is a cause for Transceiver replacement.

a. Remove RF Cable from Transceiver.

b. Connect 20-db RF attenuator (suitable for 10-GHz frequency range) to Transceiver output.

c. Connect RF power meter to 20-db RF attenuator.

d. Turn on power supplies PS1 and PS2.

e. Verify output power of 1.2 to 2.4 mΩ (after 20-db RF attenuator).

f. Turn off PS1 and PS2.

g. Disconnect RF power meter and connect RF frequency counter to 20-db RF attenuator.

h. Turn on PS1 and PS2.

i. Verify frequency of 10,525±1 MHz. Adjust frequency using adjustment screw (see Figure 3-8) on Transceiver.

j. Turn off PS1 and PS2.

k. Install RF Cable (1) IAW para. 3.3.6.3.

l. Perform Transceiver Assy Basic Performance Test, para. 3.3.8.3, Table 3-10.

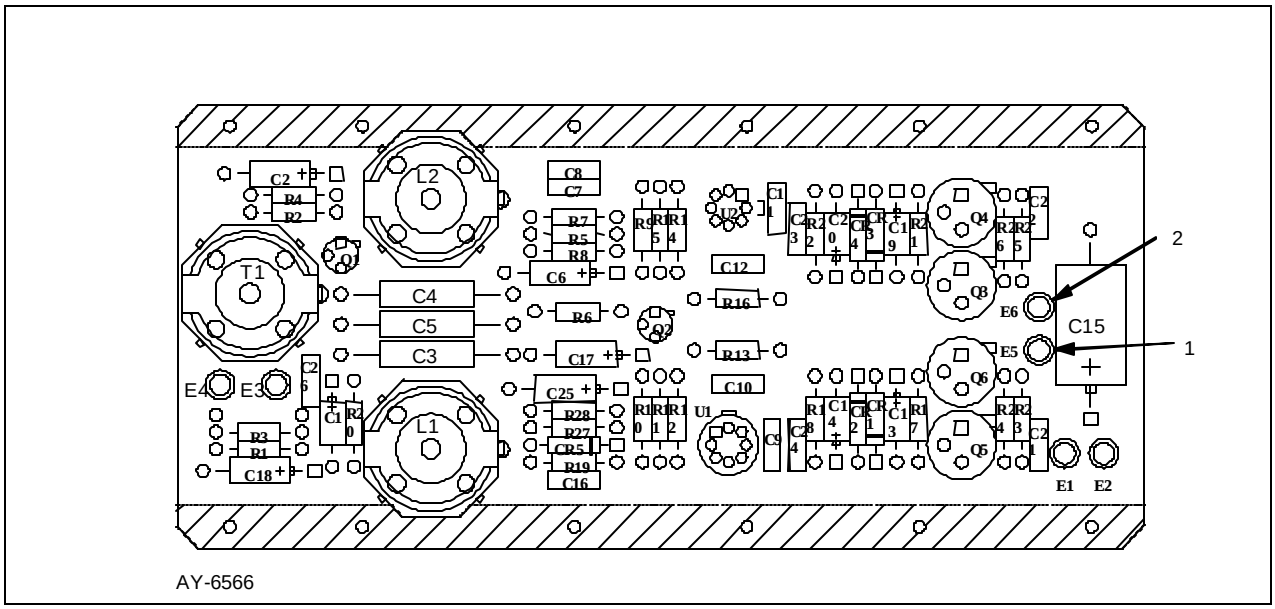

Figure 3-13. Doppler Amplifier CCA, P/N AY6706566-0

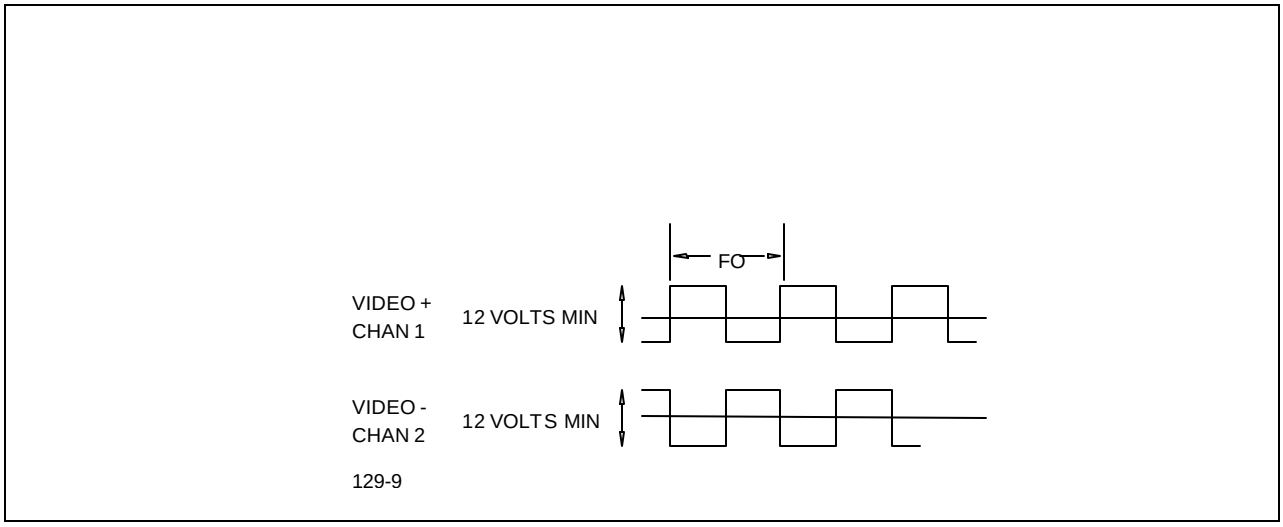

Figure 3-14. Doppler Wave Form

3.3.9.5 RF Cable Functional Test

a. Remove RF Cable from Transceiver and Microstrip Antenna Connector (See para. 3.3.5.4).

b. Perform the Transmitter Malfunction Isolation Test (para. 3.3.9.4). Record output power of Transceiver in dbm after the 20-db RF attenuator (P1).

c. Connect RF Cable to 20-db attenuator mounted on Transceiver SMA connector. Connect other end of RF Cable to power meter thermistor using SMA male to SMA male adapter.

d. Measure RF power passing through RF Cable in dbm (P2). Verify that power loss P1-P2 is less than 1.5 db.

e. If RF Cable fails test, replace it with new one IAW para. 3.3.6.3.

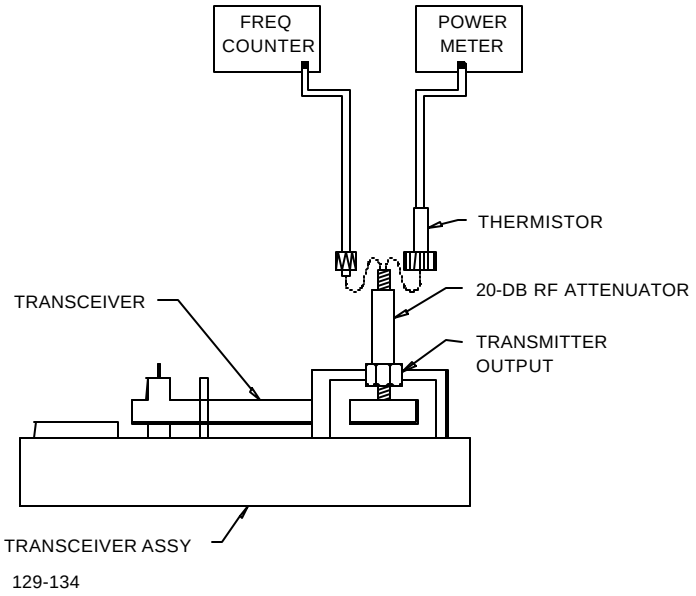

Figure 3-15. Transceiver Malfunction Isolation

SECTION IV. DISPLAY MODULE, P/N AY6706702-0 AND AY6706702-1

SECTION CONTENTS

		Page
3.4	DISPLAY MODULE, P/N AY6706702-0, AY6706702-1	3-49
3.4.1	GENERAL.	3-49
3.4.2	TEST EQUIPMENT AND SPECIAL TOOLS REQUIRED.	3-49
3.4.3	MATERIALS REQUIRED.	3-51
3.4.4	GENERAL REPAIR REQUIREMENT.	3-52
3.4.5	REMOVAL.	3-52
3.4.6	INSTALLATION.	3-53
3.4.7	INSPECTION.	3-53
3.4.8	CONTINUITY TEST.	3-53
3.4.9	FUNCTIONAL TEST.	3-54

3.4 DISPLAY MODULE, P/N AY6706702-0, AY6706702-1

3.4.1 General

The following paragraphs provide repair procedures and maintenance information for the CPDU Display Module, P/N AY6706702-0, AY6706702-1. Source, maintenance, and recoverability codes are listed below:

U.S. Army	PAFZZ
U.S. Marine Corps	PAFHH

3.4.2 Test Equipment and Special Tools Required

Test equipment and special tool requirements are listed in Table 3-13. Unless otherwise specified, the test equipment and special tools listed below will be used for testing the Display Module. Each commercially available item of test equipment can be replaced by equipment equivalent to that listed. Display module testing requires an IBM or IBM compatible personal computer. Required operating characteristics for the computer are listed in Table 3-14.

Table 3-13. Test Equipment and Special Tools Required

Nomenclature	Part/Spec. No.	Appendix C Figure 27 Item No.
Digital Multimeter	Hewlett Packard, Model 3478A	43
Electronic Equipment Tool Kit	PPL863	11
Power Supply, Dual (0-40 V, 2 A)	Lambda, LLS-6040	25
Test Set	RSL, P/N AY6707990-0	34
Torque Wrench	TS30	6
ESDWork Station Kit	M87893-02	13
Personal Computer	IBM 386 (or above)	46

Table 3-14. Computer Minimum Requirements

Characteristic	Requirements
Computer Type	IBM PC or compatible
CPU	386
Clock Speed	16 MHz
RAM	640 K
Hard Disk	5 MB free space
Floppy Disk Drive	3.5 inch, 1.44 MB
Serial Port	Configured as COM1 or COM2
I/O Card	PCL-724 (Adventech)
MS-DOS Version	6.2 (or higher version)
Application Software Diskette	RSL, P/N RD6708135-0

NOTE

The Adventech I/O card requires four consecutive address locations in the PC. The 8-position DIP switch determines the address (factory set for 2C0 through 2C3). The software PN RDG708135-0 uses addresses 300H through 303H.

Set DIP switch and jumpers on the Adventech I/O card as follows:

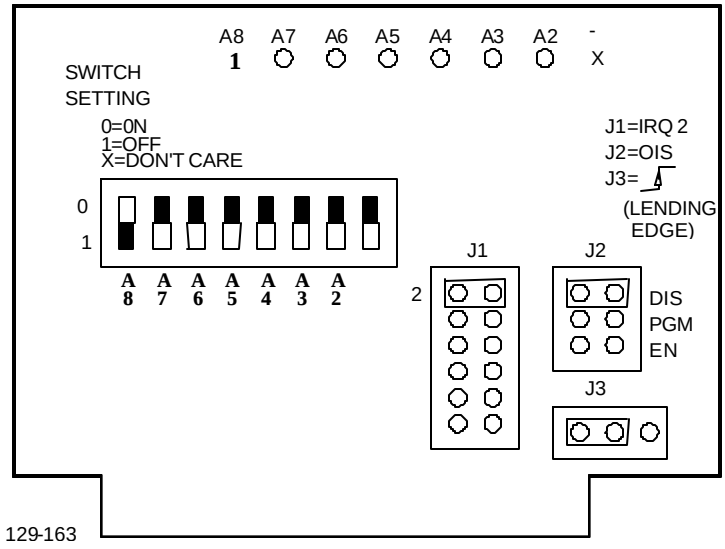

3.4.3 Materials Required

Repair materials and other consumable item requirements are listed in Table 3-15.

Table 3-15. Materials Required

Nomenclature	Part/Spec. No.	Appendix F Item No.
Primer	747-55	17
Sealing Compound	83-31	16
Solder	SN63WRMAP3	23
Antistatic Bag	3271576	33
Insulation Compound	MILI46058TYPE1B31	9
Adhesive	MIL-A-46146, Type III	19
Tape, Glass Cloth .5" Wide	MIL-I-19166	38

3.4.4 General Repair Requirement

The following general requirements apply to the repair of the display module.

CAUTION

The display contains assemblies subject to damage by electrostatic discharge. Use approved grounding procedures before touching, removing, or inserting circuit card assemblies.

a. Bond components to board with MIL-A-46146, Type III, adhesive.

b. Component shall be mounted flush to board. No angle is allowed.

c. Do not bend component leads.

d. Maximum component lead protrusion shall not exceed 0.060 in. from bottom of CCA.

e. Maximum component height shall not exceed 0.29 in., as measured from top of CCA.

f. Use only SN63WRMAP3 tin/lead solder or approved equivalent.

CAUTION

Insulation compound must not be applied to any connector pins. Inadvertent application of compound to connector pins may require replacement of connector.

g. Apply uniform coating of MILI46058TYPE1B31 insulation compound, 0.003 ± 0.002 in. thick on printed side only, where compound has been removed during CCA repairs.

h. Wrap harness using tape MIL-I-19166. Overlap will be 0.1 to 0.3 in.

3.4.5 Removal

a. Refer to Figure 3-1. Loosen 10 captive screws (1) securing back cover (2) to CPDU. Remove back cover.

b. Refer to Figure 3-1. Remove eight screws and eight flat washers securing card cage to front cover assembly.

Refer to Figure 3-16. Remove Display Module from CPDU as follows:

c. Loosen four captive screws (9/10) securing P4 and P5 to motherboard.

d. Disconnect connectors P4 and P5 from motherboard.

e. Remove card cage.

f. Remove three screws (6), three washers (7), and three clamps (8) securing Display
Module wiring harness to front cover assembly (5).

g. Remove four screws (1), four washers (2), and Display Module (4) from front cover assembly and place in antistatic bag.

3.4.6 Installation

Refer to **Figure 3-16**. Installation of Display Module. Install as follows:

a. Position Display Module Assembly into front cover assembly and secure with four screw (1), four washers (2), and one terminal lug (3).

b. Install three clamps (8), three washers (7), and three screws (6) to secure wiring harness of Display Module Assembly to front cover assembly.

c. Install two plugs, P4 and P5 to J4 and J5 of motherboard assembly and secure with four captive screws (9/10).

d. Refer to **Figure 3-1**. Position card cage onto front cover assembly and secure with eight screws (10) and eight flat washers (11).

e. Refer to **Figure 3-1**. Position back cover onto CPDU and secure with 10 captive screws (1).

.

3.4.7 Inspection

Inspect Display Module as follows:

a. Inspect all components for security of attachment.

b. Inspect all parts for damage, wear, and deterioration.

c. Inspect all parts for nicks, scoring, dents, scratches, and broken welds.

d. Inspect all electronic components for indication of overheating, cracked bodies, loose terminals, broken leads, cold solder joints, and other indications of damage or deterioration.

e. Inspect all wiring for bent or broken leads; cracked, frayed, deteriorated, worn, overheated, or burned insulation, and security of attachment.

f. Inspect wire bundles for security of attachment. Ensure wires are not pinched or crimped.

g. Inspect connectors for broken, bent, recessed, loose, damaged, or missing pins.

h. Repair or replace all damaged parts.

3.4.8 Continuity Test

Inspect Display Module wiring continuity as follows:

a. Set DMM to RESISTANCE mode.

b. Set DMM to OHMS X 1 mode.

c. Zero DMM to eliminate internal resistance of meter and resistance of test leads.

d. Measure continuity between connector pins and CCA in accordance with **Figure 3-20**. Resistance should not exceed 0.5 ohm.

e. If incorrect readings are noted in step d., repair wire or connector.

3.4.9 Functional Test

The functional test setup for the Display Module is as shown in **Figure 3-17. Figures 3-18 and 3-19** are detailed illustrations of the Display Module tester and its schematic. Perform functional test of Display Module as follows:

a. Turn power supply on.

b. Adjust power supply -15 VDC output for -15±0.1 VDC.

c. Adjust power supply +5 VDC output for +5±0.1 VDC.

d. Turn off power supply.

e. Set DMM to RESISTANCE mode.

f. Set DMM to OHMS X 1 mode.

g. Zero DMM to eliminate internal resistance of meter and test leads.

h. Connect RSL Display Tester (P/N AY6707990-0) and computer as shown in **Figure 3-17**.

i. Set test set EL switch to OFF.

j. Connect Display Module (UUT) to test set.

k. Turn power supply on.

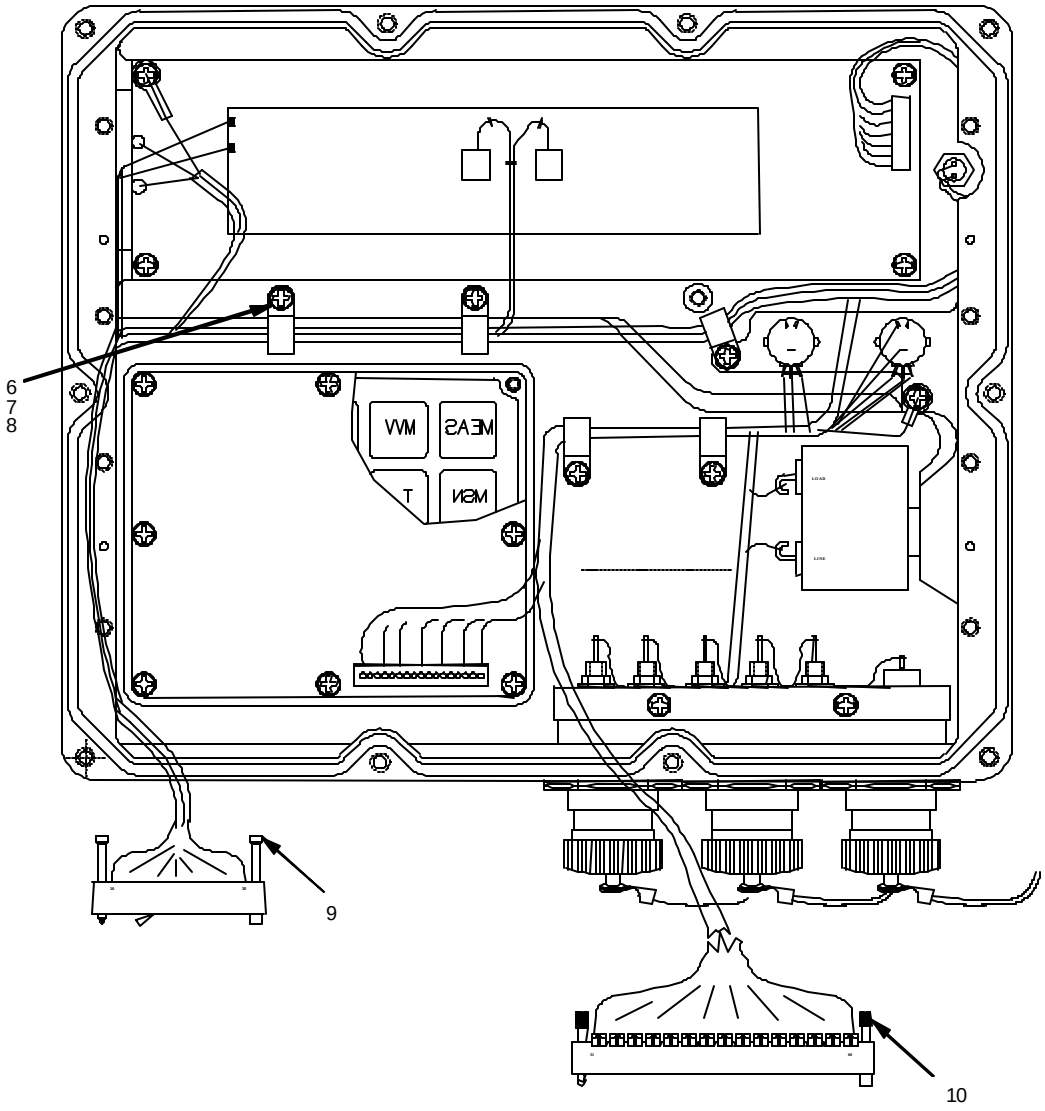

Figure 3-16. CPDU Front Panel Assembly, P/N AY6706708-0

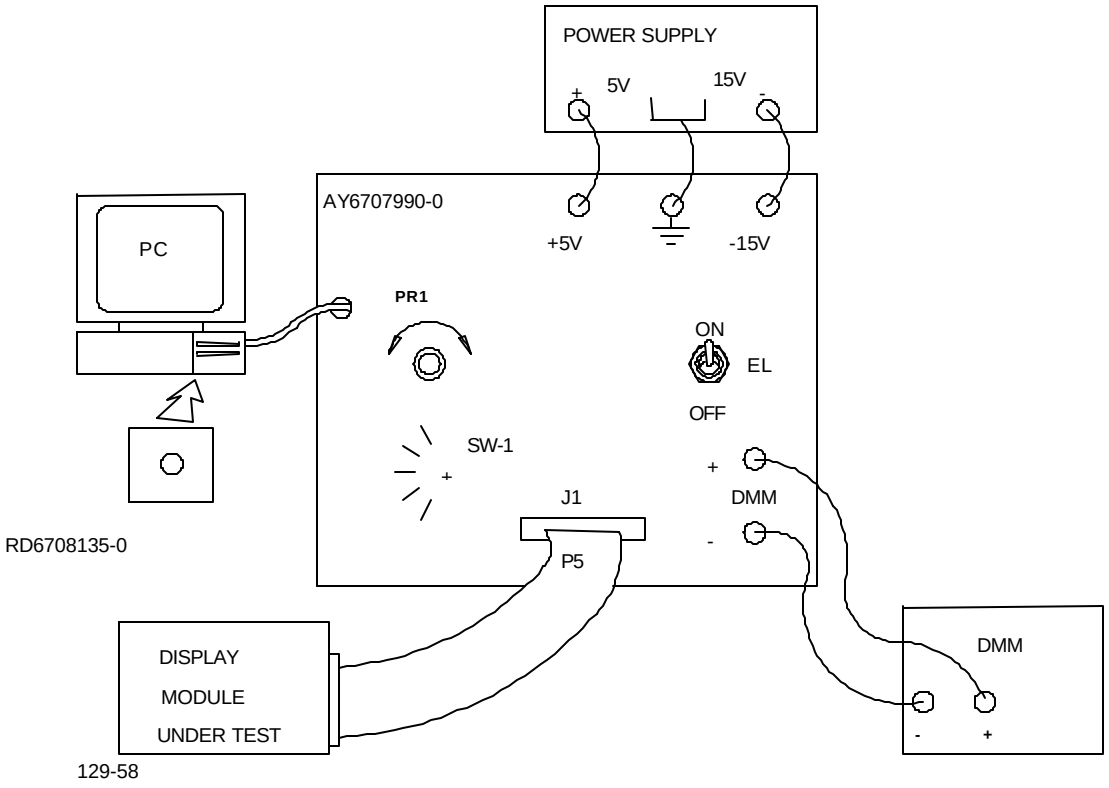

Figure 3-17. Display Module Test Set-up

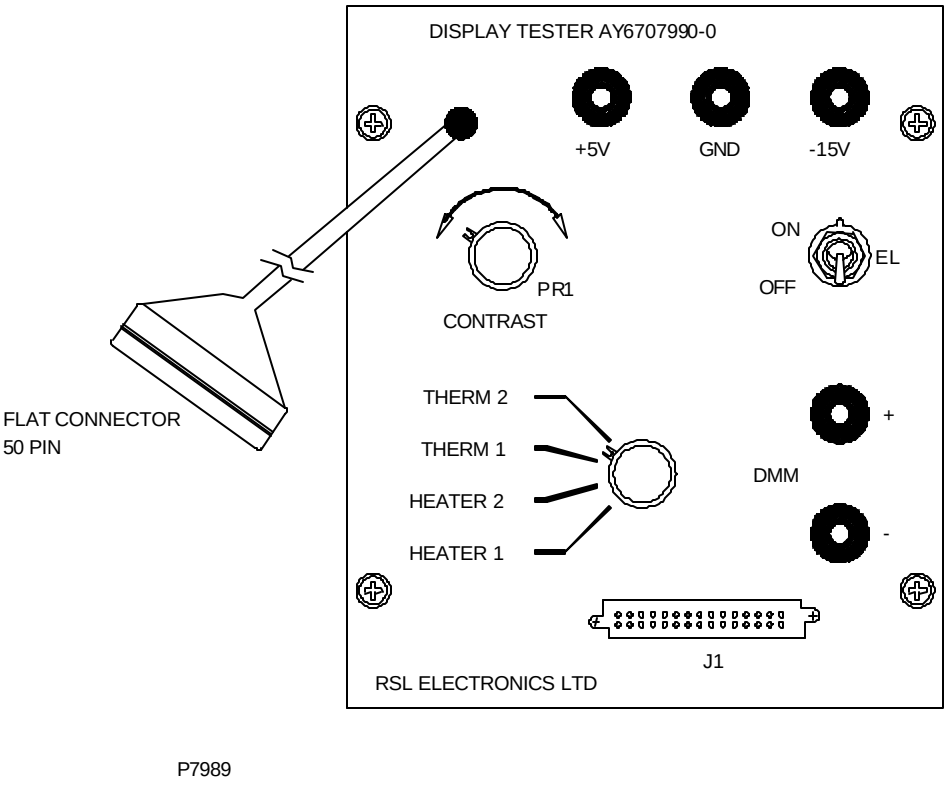

Figure 3-18. Display Module Tester, P/N AY6707990-0

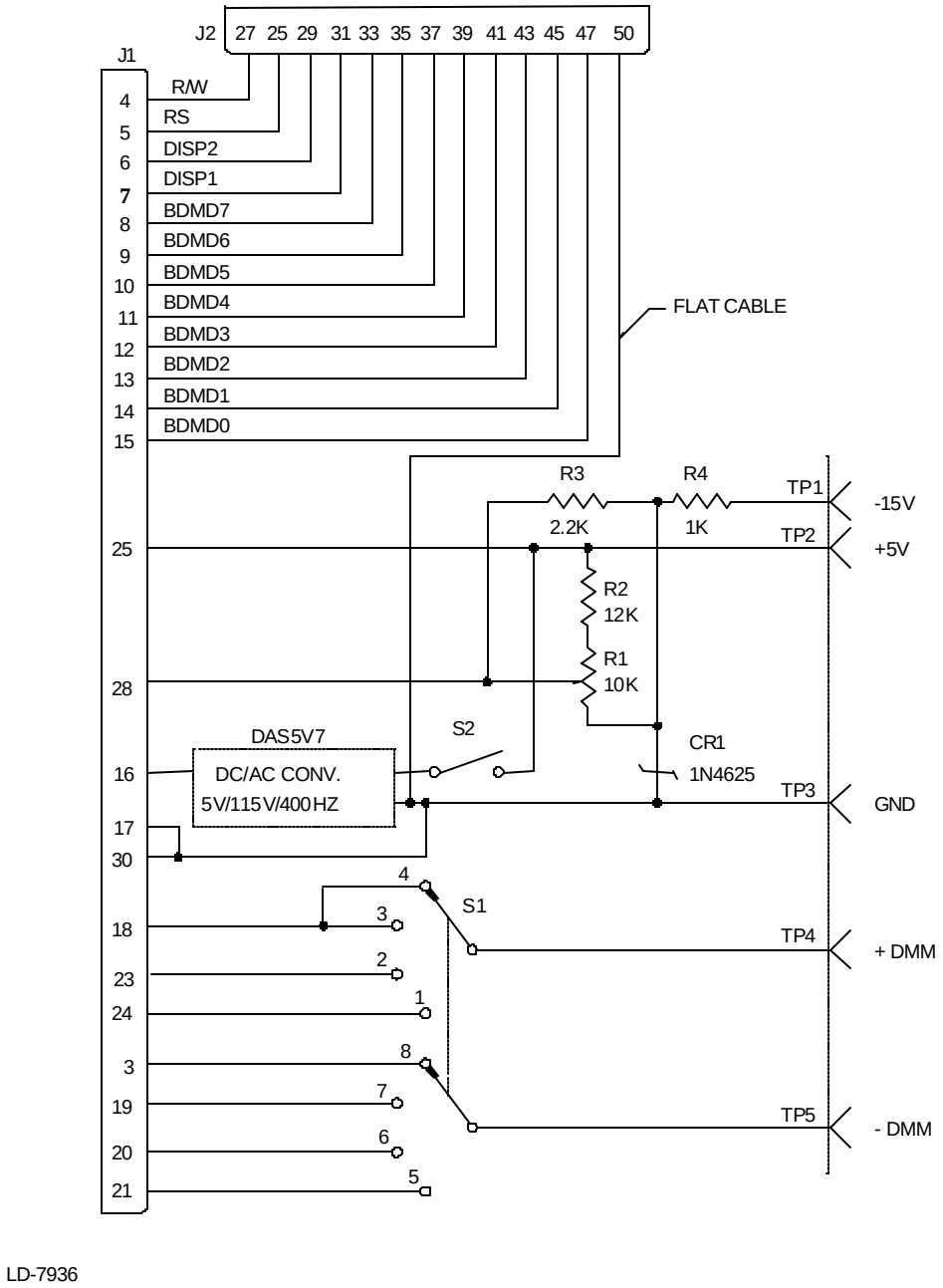

LD-7936

Figure 3-19. Display Module Tester Schematic

3.4.9.1 Heater and Temperature Sensor Test

a. On test set, set switch S1 to HEATER 1. Verify DMM indicates 86±8 Ω.
b. On test set, set switch S1 to HEATER 2. Verify DMM indicates 69±7 Ω.
c. On test set, set switch S1 to THERM 1. Verify DMM indicates between 746-810 Ω.
d. On test set, set switch S1 to THERM 2. Verify DMM indicates between 746-810 Ω.
e. If resistance measured in steps c. and d. is above or below range given, measure thermistor temperature and compare with temperature and resistance data in Table 3-16. Tolerance is ±2.5 Ω.
f. On test set, set EL switch to ON. Verify Display EL backlight comes on.
g. If any failures occur during test, replace the heater, temperature sensor, or EL, see depot-level maintenance procedure.
h. End of test.

3.4.9.2 Display Unit Test

a. Turn on computer.
b. At the C:\ prompt, type **LCDT.EXE**.
c. Press ENTER on PC keyboard and following screen will appear:

Insert Display and Press Any Key

ESC - Exit

d. Press spacebar. Verify all characters on computer screen are similar to characters on display under test.

!"#$%&'()*+,-./0123456789:;<=>?@ABCDEFGH IJKLMNOPQRSTUVWXYZ[¥]^_´abcdefghijklmnop qrstuvwxyz| } { ® ¬. PRESS ONCE TO DARKEN DISPLAY, TWICE TO EXIT DISPLAY TEST.

e. On test set, rotate PR1 control fully CW and CCW. Verify display contrast varies.
f. Press spacebar again. Verify all characters on display darken.

DARKEN DISPLAY

Press Any Key

g. If any failures occur during test, replace Display Module.
h. End of test.

Table 3-16. Thermistor Temperature Data

Temperature °F	Resistance W	Temperature °F	Resistance W
32.0	684.94	64.0	758.43
33.0	687.21	65.0	760.77
34.0	689.47	66.0	763.12
35.0	691.73	67.0	765.46
36.0	693.99	68.0	767.80
37.0	696.25	69.0	770.18
38.0	698.51	70.0	772.56
39.0	700.78	71.0	774.93
40.0	703.04	72.0	777.30
41.0	705.30	73.0	779.68
42.0	707.59	74.0	782.06
43.0	709.87	75.0	784.43
44.0	712.16	76.0	786.80
45.0	714.45	77.0	789.18
46.0	716.73	78.0	791.58
47.0	719.01	79.0	794.00
48.0	721.30	80.0	796.40
49.0	723.53	81.0	798.81
50.0	725.87	82.0	801.21
51.0	728.19	83.0	803.65
52.0	730.50	84.0	806.03
53.0	732.82	85.0	808.44
54.0	735.13	86.0	810.84
55.0	737.45	87.0	813.28
56.0	739.76	88.0	815.72
57.0	742.08	89.0	818.17
58.0	744.39	90.0	820.81
59.0	746.71	91.0	823.04
60.0	749.05	92.0	825.48
61.0	751.39	93.0	827.93
62.0	753.74	94.0	830.37
63.0	756.08	95.0	832.80

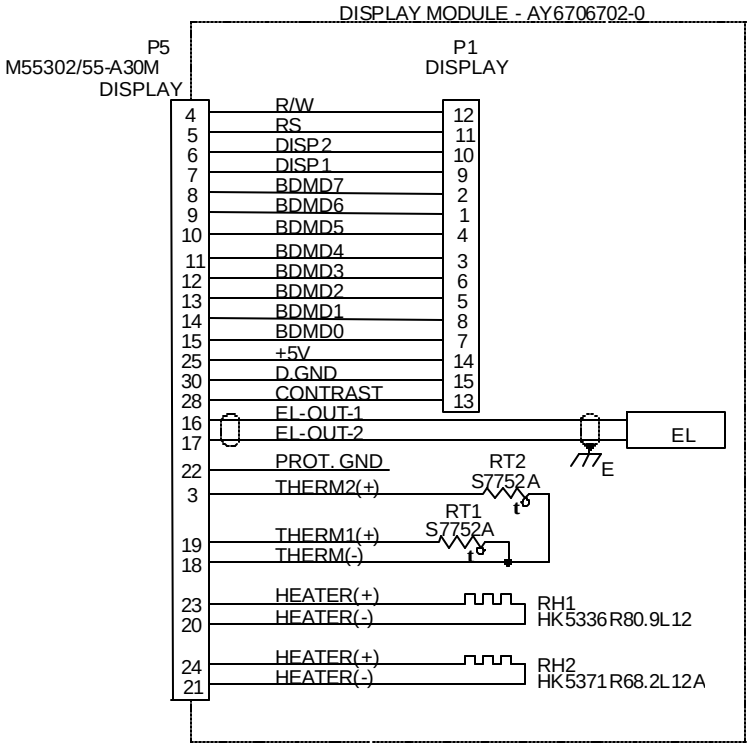

Figure 3-20. Display Module Schematic Diagram

SECTION V. KEYBOARD CCA, P/N AY6704586-0

SECTION CONTENTS

		Page
3.5	KEYBOARD CCA, P/N AY6704586-0.	3-62
3.5.1	GENERAL.	3-62
3.5.2	TEST EQUIPMENT AND SPECIAL TOOLS REQUIRED.	3-62
3.5.3	MATERIALS REQUIRED.	3-63
3.5.4	GENERAL REPAIR REQUIREMENTS.	3-63
3.5.5	REMOVAL.	3-64
3.5.6	INSTALLATION.	3-67
3.5.7	INSPECTION.	3-67
3.5.8	FUNCTIONAL TEST.	3-68

3.5 KEYBOARD CCA, P/N AY6704586-0

3.5.1 General

The following paragraphs provide repair procedures and maintenance information for the CPDU Keyboard CCA, P/N AY6704586-0. Source, maintenance, and recoverability codes are listed below:

U.S. Army	PAFFF
U.S. Marine Corps	PAFHH

3.5.2 Test Equipment and Special Tools Required

Test equipment and special tool requirements are listed in Table 3-17. Unless otherwise specified, the test equipment and special tools listed below will be used for testing the Keyboard CCA. Each commercially available item of test equipment can be replaced by equipment equivalent to that listed.

Table 3-17. Test Equipment and Special Tools Required

Nomenclature	Part/Spec. No.	Appendix C Figure 27 Item No.
Current Meter	Fluke, Model 77-2	5
Digital Multimeter	Hewlett Packard, Model 3478A	43
Electronic Equipment Tool Kit	PPL863	11
Power Supply (0-40 V, 1 A)	Lambda, LLS-5040	35
Test Set, Keyboard	RSL, P/N AY6707957-0	36
Torque Wrench	TS30	6
ESD Work Station Kit	M87893-02	13

3.5.3 Materials Required

Repair materials and other consumable item requirements are listed in Table 3-18.

Table 3-18. Materials Required

Nomenclature	Part/Spec. No.	Appendix F Item No.
Adhesive	MIL-A-46146, Type III	19
Insulation Compound	MILI46058TYPE1B31	9
Solder	SN63WRMAP3	23

3.5.4 General Repair Requirements

The following general requirements apply to the repair of the Keyboard CCA.

a. Bond components to board with MIL-A-46146, Type III, adhesive.
b. Component shall be mounted flush to board. No angle is allowed.
c. Do not bend component leads.
d. Maximum component lead protrusion shall not exceed 0.060 in. from bottom of CCA.
e. Maximum component height shall not exceed 0.29 in., as measured from top of CCA.
f. Use only SN63WRMAP3 tin/lead solder or approved equivalent.

CAUTION

Insulation compound must not be applied to any connector pins. Inadvertent application of compound to connector pins may require replacement of connector.

g. Apply uniform coating of MILI46058TYPE1B31 insulation compound, 0.003 ±0.002 in. thick on printed side only, where compound has been removed during CCA repairs.
h. Ensure that connector is properly oriented before installing.

3.5.5 Removal

CAUTION

The CPDU contains assemblies that are subject to damage by electrostatic discharge. Use approved grounding procedures before touching, removing, or inserting circuit card assemblies.

3.5.5.1 Keyboard CCA

Refer to **Figure 3-21**. Remove Keyboard CCA from front panel assembly as follows:

a. Perform CPDU Disassembly IAW para. 3.2.5.
b. Disconnect front panel harness connector from J1 (1).
c. Remove eight screws (2) and eight washers (3) from CCA (4).
d. Remove CCA (4) from front panel assembly (5).
e. Ensure that key caps (8) stay in place.

3.5.5.2 Keyboard Gasket

Refer to **Figure 3-21.** Remove Keyboard Gasket from front panel assembly as follows:

a. Remove Keyboard CCA (para. 3.5.5.1).
b. Remove gasket frame (6).
c. Remove gasket (7).

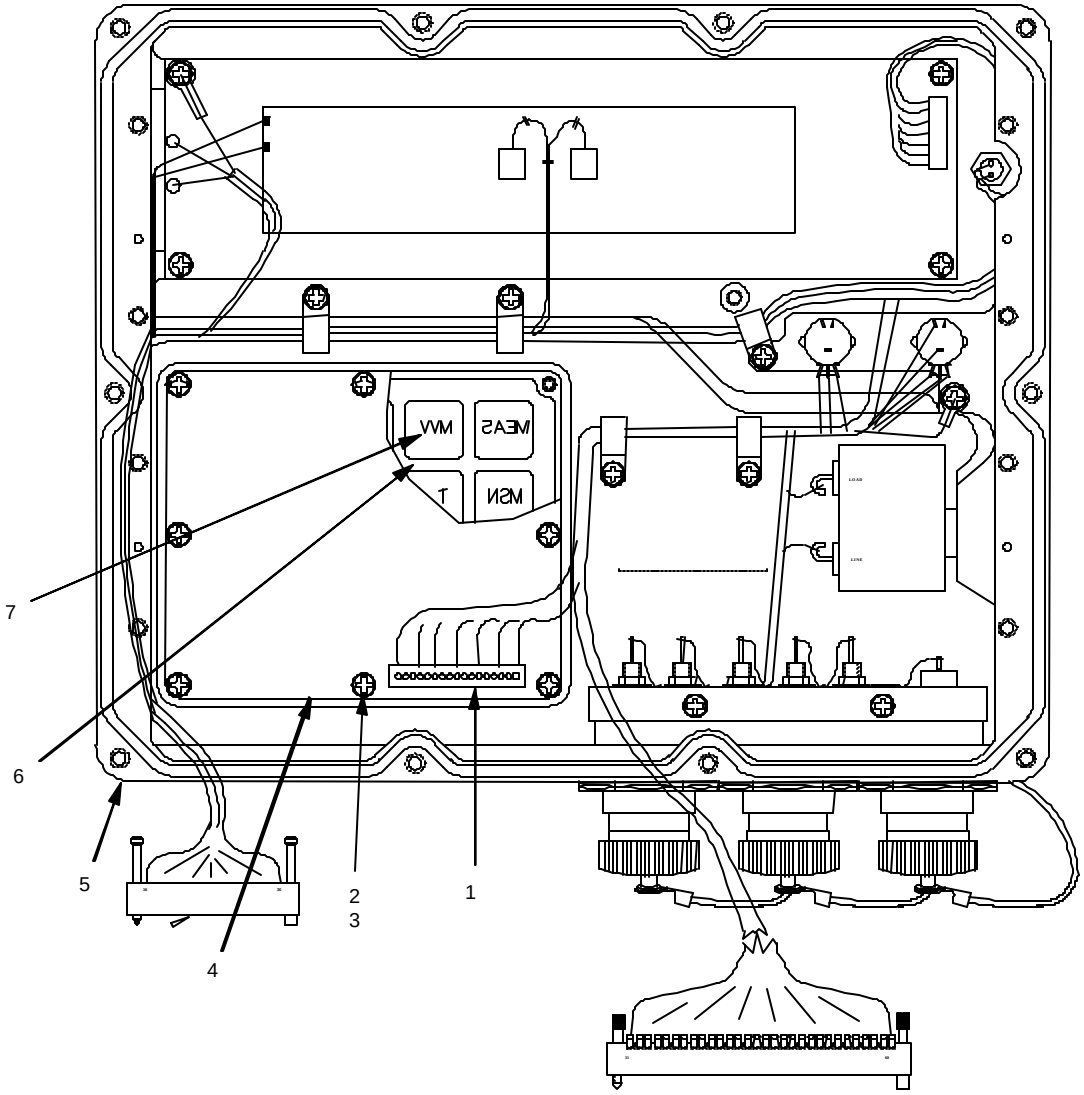

Figure 3-21. CPDU Front Panel Assembly, P/N AY6706708-0 (Sheet 1 of 2)

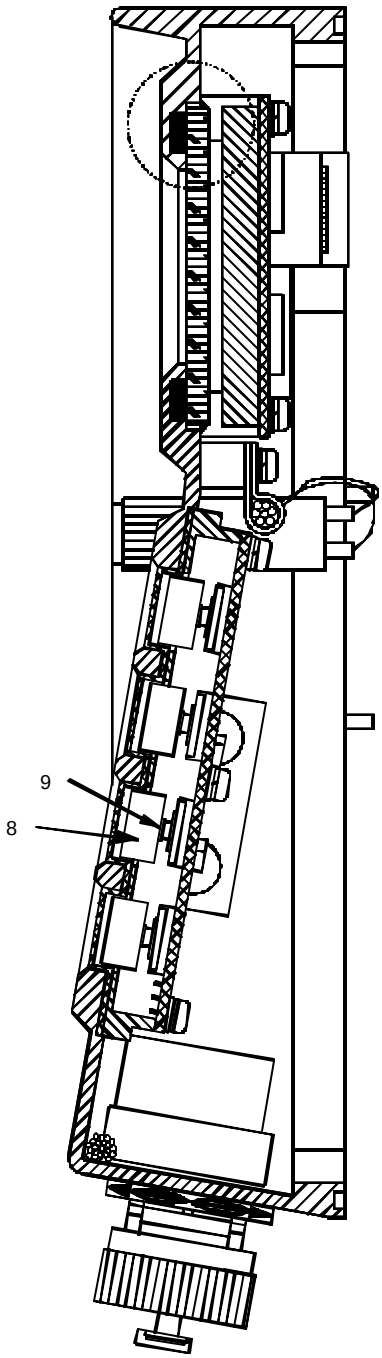

Figure 3-21. CPDU Front Panel Assembly, P/N AY6706708-0 (Sheet 2 of 2)

3.5.6 Installation

CAUTION

The CPDU contains assemblies that are subject to damage by static electricity. Use approved grounding procedures before touching, removing, or inserting circuit card assemblies.

3.5.6.1 Keyboard Gasket

Refer to **Figure 3-21**. Install Keyboard Gasket in front panel assembly as follows:

a. Carefully place gasket (7) on front panel assembly (5). Ensure that gasket is not skewed and is oriented properly.

b. Place gasket frame (6) over gasket (7). Ensure that front panel assembly, gasket, and gasket frame screw holes are aligned.

c. Install Keyboard CCA (para. 3.5.6.2).

3.5.6.2 Keyboard CCA

Refer to **Figure 3-21**. Install Keyboard CCA in front panel assembly as follows:

a. Ensure that all 20 key caps (8) are securely fastened to keys (9).

b. Position CCA (4) over gasket frame (6).

c. Apply primer and sealing compound to eight screws (2).

d. Attach CCA (4) and gasket frame (6) to front panel assembly (5) with eight screws (2) and eight washers (3). Torque screws to 4 in. lb.

e. Connect front panel assembly harness connector to J1 (1).

f. Perform CPDU Assembly IAW para. 3.2.6.

3.5.7 Inspection

Inspect Keyboard CCA as follows:

a. Inspect all components for security of attachment.

b. Inspect all parts for damage, wear, and deterioration.

c. Inspect connectors for broken, bent, recessed, loose, damaged, or missing pins.

d. Inspect keyboard gasket for tears, holes, or other damage.

e. Repair or replace all faulty or damaged parts before performing functional test.

3.5.8 Functional Test

Perform functional test of Keyboard CCA as follows:

NOTE

Refer to para. 3.2.5 and perform steps a., b., f., g., h., and i. prior to test.

3.5.8.1 Test Set-up

The Functional Test Setup for the Keyboard CCA is shown in **Figure 3-22. Figures 3-23 and 3-24** are detailed illustrations of the Keyboard CCA Tester and its schematic. Connect Keyboard CCA to test equipment as follows:

a. On Keyboard tester, ensure test set ON/OFF switch is set to OFF.

b. Ensure power supply and current meter are turned off.

c. Connect power supply positive lead to tester PS+ jack. Connect negative lead to PS-jack.

d. Connect current meter positive lead to tester CURRENT+ jack. Connect negative lead to CURRENT- jack.

e. Turn on power supply.

f. Adjust power supply output voltage to 26 VDC - 28 VDC.

g. Connect Keyboard CCA to connector J1 of tester.

h. Turn current meter on.

i. On tester, set switch S1 to R1.

j. On tester, set ON/OFF switch to ON.

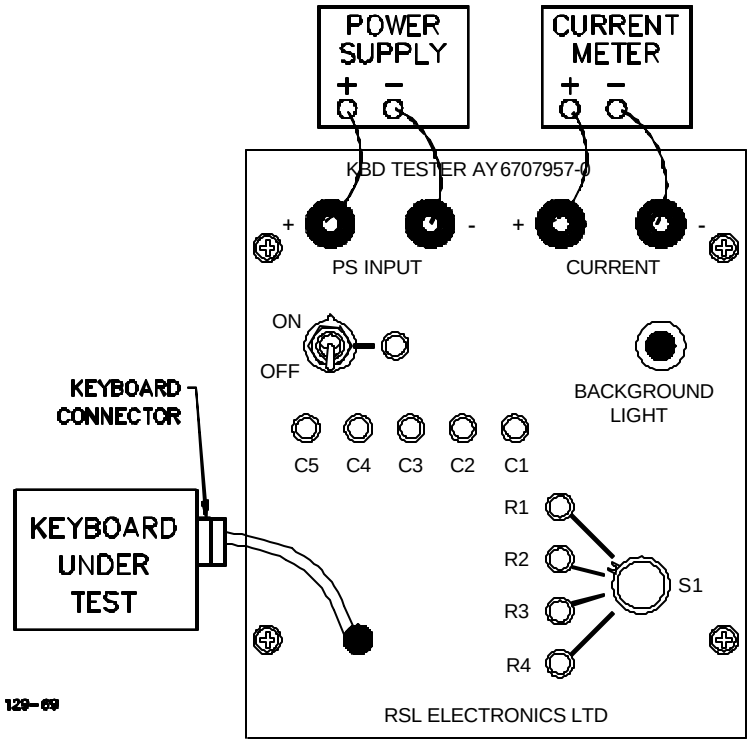

Figure 3-22. Keyboard CCA Test Set-up

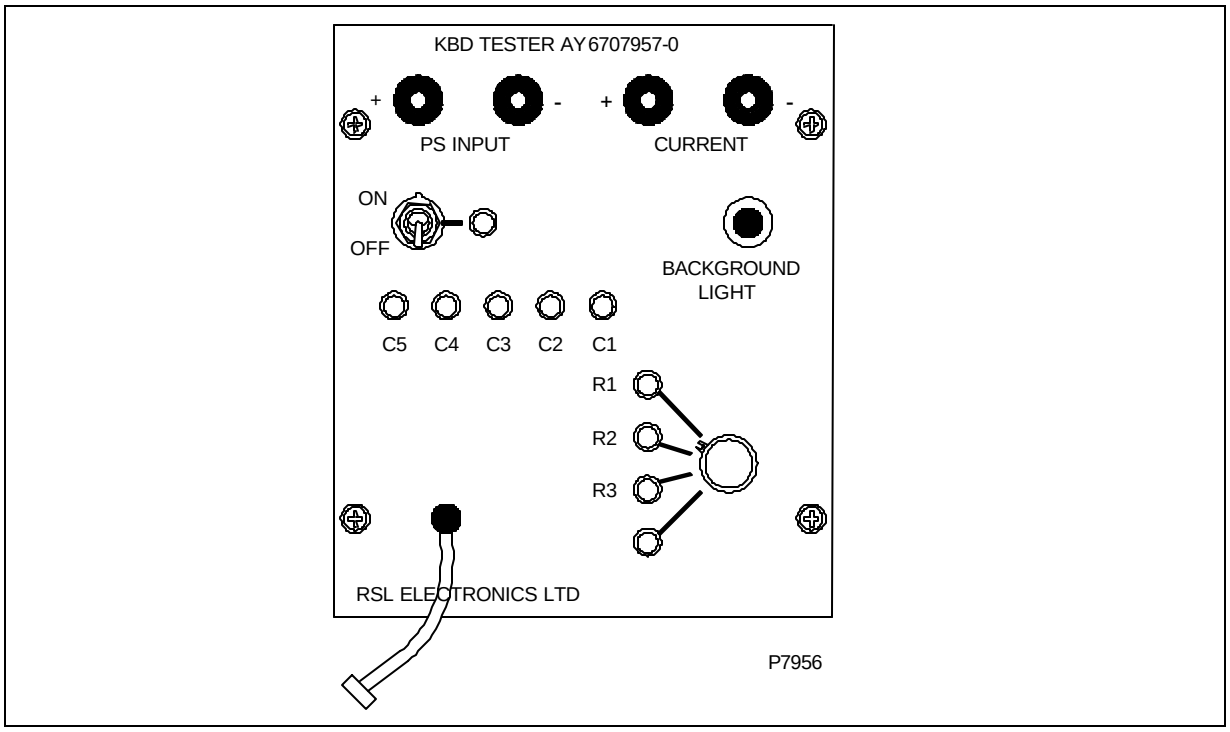

Figure 3-23. Keyboard CCA Tester, P/N AY6707957-0

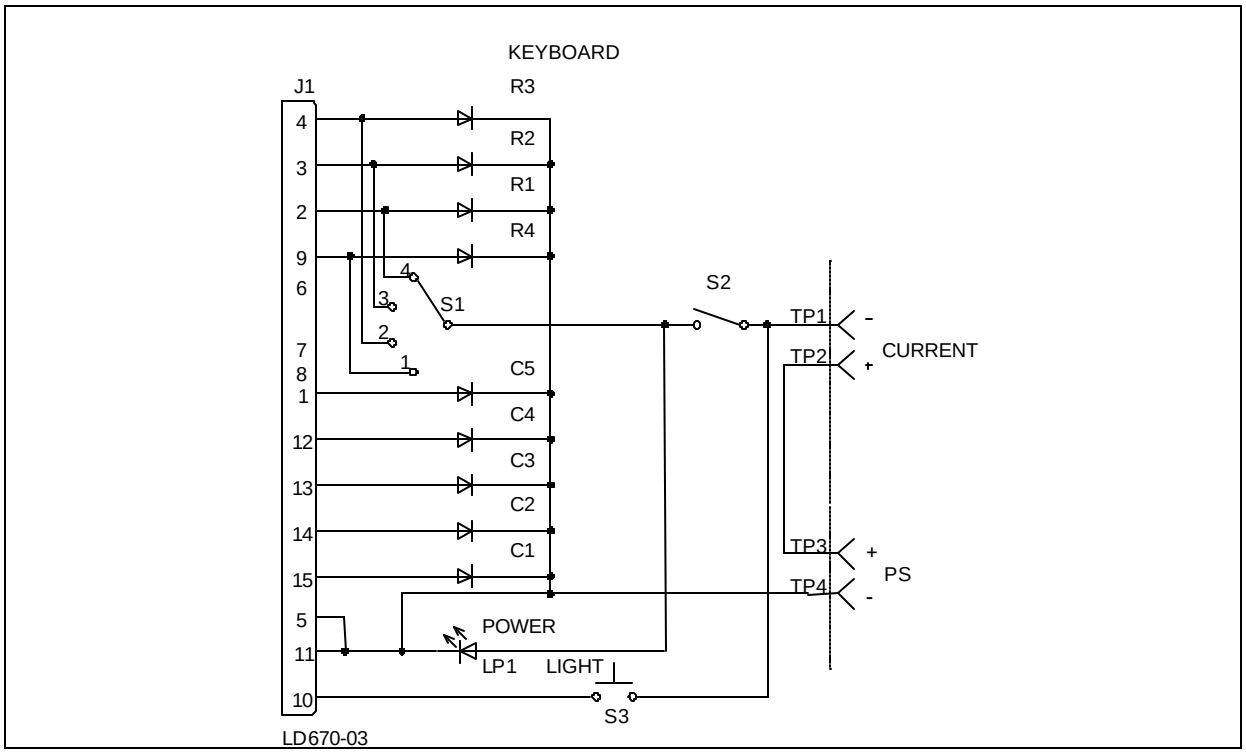

Figure 3-24. Keyboard Tester Schematic

3.5.8.2 Keyboard Switch Test

Perform switch test in accordance with Table 3-19. Refer to **Figure 3-25** for Keyboard CCA switch locations. Troubleshoot switch failures using **Figure 3-26**, Wiring Schematic. Repair wiring or replace switch. Repeat functional test.

Table 3-19. Keyboard Test

Test Set Switch S1 Setting	Press Keyboard Switch	Test Set Lights On
R1	SW5	R1 - C1
R1	SW4	R1 - C2
R1	SW3	R1 - C3
R1	SW2	R1 - C4
R1	SW1	R1 - C5
R2	SW10	R2 - C1
R2	SW9	R2 - C2
R2	SW8	R2 - C3
R2	SW7	R2 - C4
R2	SW6	R2 - C5
R3	SW15	R3 - C1
R3	SW14	R3 - C2
R3	SW13	R3 - C3
R3	SW12	R3 - C4
R3	SW11	R3 - C5
R4	SW20	R4 - C1
R4	SW19	R4 - C2
R4	SW18	R4 - C3
R4	SW17	R4 - C4
R4	SW16	R4 - C5

3.5.8.3 Lamp Test

Perform lamp test as follows. Troubleshoot lamp failures using **Figure 3-26**, Wiring Schematic. Repair wiring or replace lamp. Repeat functional test.

a. On tester, depress and hold BACKGROUND LIGHT pushbutton. Verify keyboard lights come on.
b. Verify DMM indicates 260±50 mA DC current.
c. On tester, set ON/OFF switch to OFF.
d. Turn off and disconnect all test equipment.
e. Disconnect CCA from tester.
f. End of test.

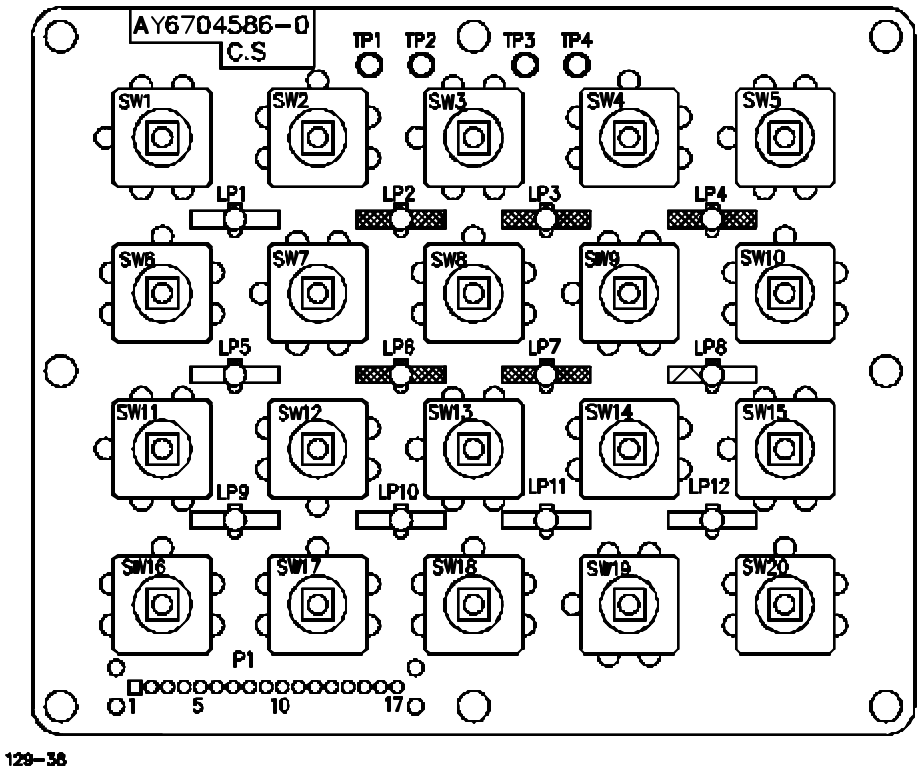

Figure 3-25. Keyboard CCA, P/N AY6704586-0, Switch and Lamp Locations

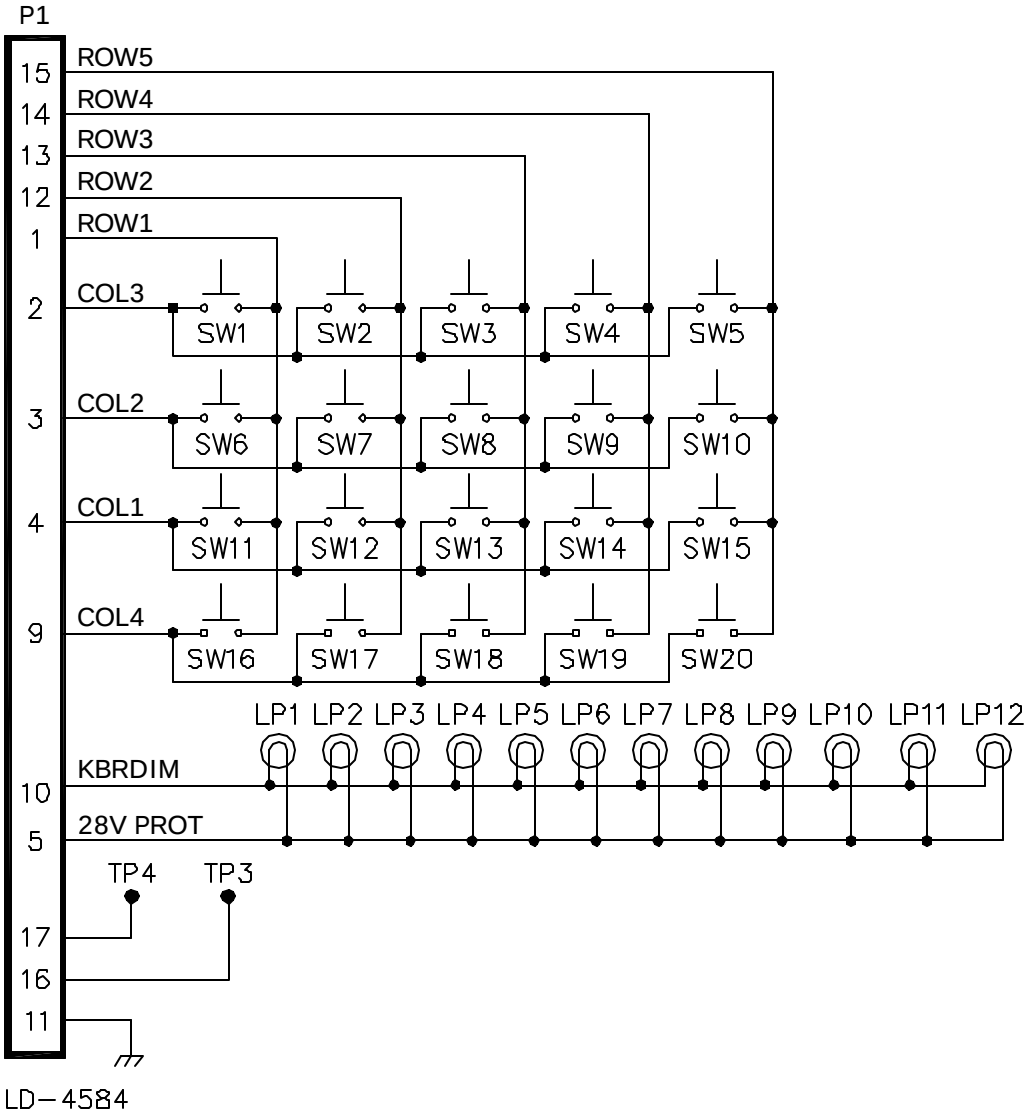

Figure 3-26. Keyboard CCA, P/N AY6704586-0, Schematic Diagram

SECTION VI. EMI MODULE, P/N AY6706705-1

SECTION CONTENTS

		Page
3.6	EMI MODULE, P/N AY6706705-1.	3-74
3.6.1	GENERAL.	3-74
3.6.2	TEST EQUIPMENT AND SPECIAL TOOLS REQUIRED.	3-74
3.6.3	MATERIALS REQUIRED.	3-75
3.6.4	GENERAL REPAIR REQUIREMENTS.	3-76
3.6.5	REMOVAL.	3-76
3.6.6	INSTALLATION.	3-77
3.6.7	INSPECTION.	3-79
3.6.8	CONTINUITY TEST.	3-79

3.6 EMI MODULE, P/N AY6706705-1

3.6.1 General

The following paragraphs provide repair procedures and maintenance information for the CPDU EMI Module, P/N AY6706705-1. Source, maintenance, and recoverability codes are listed below:

U.S. Army	PAFFF
U.S. Marine Corps	PAFFH

3.6.2 Test Equipment and Special Tools Required

Test equipment and special tool requirements are listed in Table 3-20. Unless otherwise specified, the test equipment and special tools listed below will be used for testing the EMI Module. Each commercially available item of test equipment can be replaced by equipment equivalent to that listed.

Table 3-20. Test Equipment and Special Tools Required

Nomenclature	Part/Spec. No.	Appendix C Figure 27 Item No.
Bit, Screwdriver No. 1, Crosstip (For Torque Driver)	TMP-12A	12
Connector Pliers	Snap On, PWC52	15
Crimping Tool	Daniels, Model M22520/1-01	7
Crimping Tool	Midland Ross, Model 13-0703-496	47
Contact Positioner	Daniels, Model M22520/1-04	8
Contact Positioner	Daniels, Model M22520/1-09	9
Digital Multimeter	Fluke, Model 77-2	5
Electronic Equipment Tool Kit	PPL863	11
Insertion/Extraction Tool	M81969/14-01	1
Insertion/Extraction Tool	M81969/14-02	2
Insertion/Extraction Tool	M81969/14-03	3
Torque Wrench	TS30	6
ESD Work Station Kit	M87893-02	13

3.6.3 Materials Required

Repair materials and other consumable item requirements are listed in Table 3-21.

Table 3-21. Materials Required

Nomenclature	Part/Spec. No.	Appendix F Item No.
Insulation Compound	MILI46058TYPE1B31	9
Lockwire	MS20995-C22	13
Primer	747-55	17
Sealing Compound	83-31	16
Sealing Compound	MIL-S-22473, Grade AA	20
Solder	SN63WRMAP3	23
Insulating Tubing	MS22129-22N	25
Bus Wire	QQ-W-343/S-22-S1T	29

3.6.4 General Repair Requirements

Refer to **Figure 3-28**. The following general requirements apply to the repair of the EMI Module.

NOTE

The EMI Module contains no electrostatic discharge sensitive devices, therefore ESD procedures are not required if Module has been disconnected and removed from CPDU.

a. Apply 747-55 primer and 83-31 sealing compound to EMI Module cover screw (1) threads before installing. Torque screws to 5.0±0.5 in. lb.

b. Apply 747-55 primer and MIL-S-22473 Grade AA sealing compound to EMI Module grommet nuts (2) before installing.

c. Torque value for filters FL1 and FL2 is 8±0.5 in. lb.

d. Torque value for filters FL3 thru FL11 is 4±0.5 in. lb.

e. Torque value for test points TP1 thru TP4 is 2.2±0.5 in. lb.

f. Use only SN63WRMAP3 tin/lead solder or approved equivalent.

CAUTION

Insulation compound must not be applied to any connector pins or test points. Inadvertent application of compound to connector pins or test points may require replacement of component.

g. Apply uniform coating of MILI46058TYPE1B31 insulation compound, 0.003±0.002 in. thick, where compound has been removed during CCA repairs.

h. Ensure that components are properly oriented before installing.

3.6.5 Removal

Refer to **Figure 3-27**. Remove EMI Module from CPDU front panel assembly as follows:

CAUTION

The CPDU front panel assembly contains assemblies subject to damage by static electricity. Use approved grounding procedures before touching, removing, or inserting circuit card assemblies.

a. Perform CPDU disassembly (para. 3.2.5, steps a., b., f., g., h., i.) to gain access to EMI Module.

b. Tag and identify all wires (1) soldered to Module (2).

c. Unsolder harness wires (1) from Module (2).

d. Remove lockwire (6) from connectors J1 (3), J2 (4), and J3 (5).

e. Using connector pliers, remove nuts (7) securing connectors J1, J2, and J3 to front panel assembly.

f. Remove dust caps (8) from connectors J1 (3), J2 (4), and J3 (5).

g. Remove Module (2) from front panel assembly (9).

h. Remove four screws (10) from Module and open cover (11).

3.6.6 Installation.

Refer to **Figure 3-27**. Install EMI Module in CPDU front panel assembly as follows:

CAUTION

The CPDU front panel assembly contains assemblies subject to damage by static electricity. Use approved grounding procedures before touching, removing, or inserting circuit card assemblies.

a. Attach cover (11) to EMI Module. Install four screws (10).

b. Install module (2) in front panel assembly (9). Ensure Module orientation is correct.

c. Using connector pliers, secure connectors J1 (3), J2 (4), and J3 (5) with nuts (7).

d. Connect dust caps (8) to connectors J1 (3), J2 (4), and J3 (5).

e. Secure connector nuts (7) using lockwire (6).

f. Solder wires to module.

g. Remove identification tags from wires (1).

h. Perform CPDU assembly (para. 3.2.6, steps a., b., e., f., and g.).

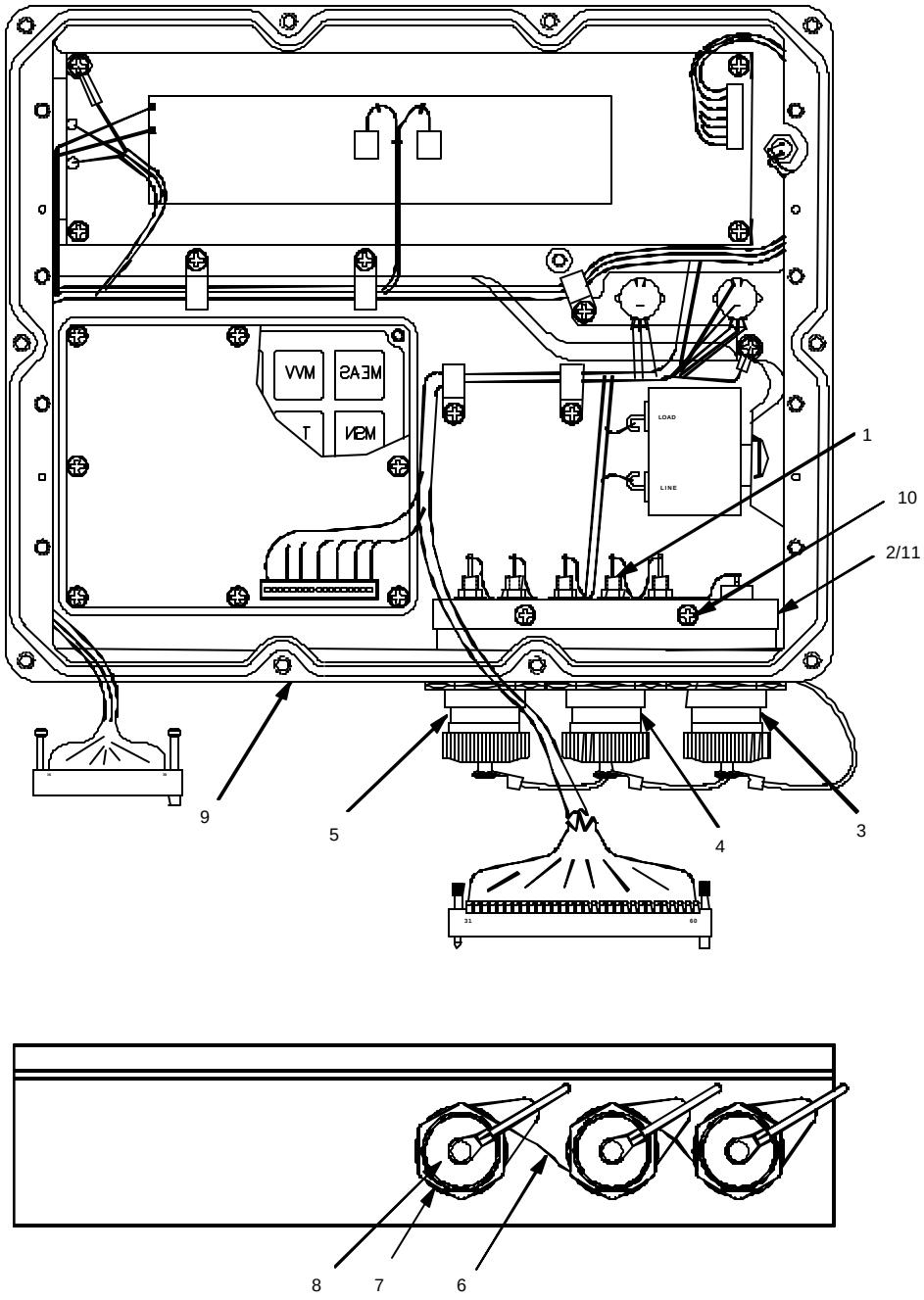

Figure 3-27. CPDU Front Panel Assembly, P/N AY6706708-0

3.6.7 Inspection

Refer to Figure 3-28. Inspect EMI Module as follows:

a. Inspect all components for security of attachment.

b. Inspect all parts for damage, wear, and deterioration.

c. Inspect all parts for nicks, scoring, dents, scratches, and broken welds.

d. Inspect all threaded parts for crossed, stripped, or otherwise damaged threads.

e. Inspect threaded inserts and nutplates for security of attachment.

f. Inspect all electronic components for indication of overheating, cracked bodies, loose terminals, broken leads, cold solder joints, and other indications of damage or deterioration.

g. Inspect all wiring for bent or broken leads; cracked, frayed, deteriorated, worn, overheated, or burned insulation, and security of attachment.

h. Inspect wire bundles for security of attachment. Ensure wires are not pinched or crimped.

i. Inspect connectors for broken, bent, recessed, loose, damaged, or missing pins.

j. Inspect painted surfaces for cracked, chipped, blistered, or deteriorated paint film.

3.6.8 Continuity Test

Check EMI Module wiring continuity as follows:

3.6.8.1 Test Set-up

a. Set DMM to RESISTANCE mode.

b. Set DMM to OHMS X 1 mode.

c. Zero DMM to eliminate internal resistance of meter and resistance of test leads.

d. Measure continuity between connector pins and EMI Module in accordance with para. 3.6.8.2 thru 3.6.8.4. Refer to Table 3-22, Figures 3-28 thru 3-30 for additional wiring information.

3.6.8.2 Power Connector J1 Test

a. Verify resistance between J1/A and TP1 is less than 0.5 Ω. If not, check wire and replace pin J1/A.

b. Verify resistance between TP1 and FL1 (inside) is less than 0.5 Ω. If not, check wire and replace L1.

c. Verify resistance between FL1 (inside) and FL1 (outside) is less than 0.5 Ω. If not, replace FL1.

d. Verify resistance between J1/B and TP2 is less than 0.5 Ω. If not, check wire and replace pin J1/B.

e. Verify resistance between TP2 and FL2 (inside) is less than 0.5 Ω. If not, check wire and replace L2.

f. Verify resistance between FL2 (inside) FL2 (outside) is less than 0.5 Ω. If not, check wire and replace FL2.

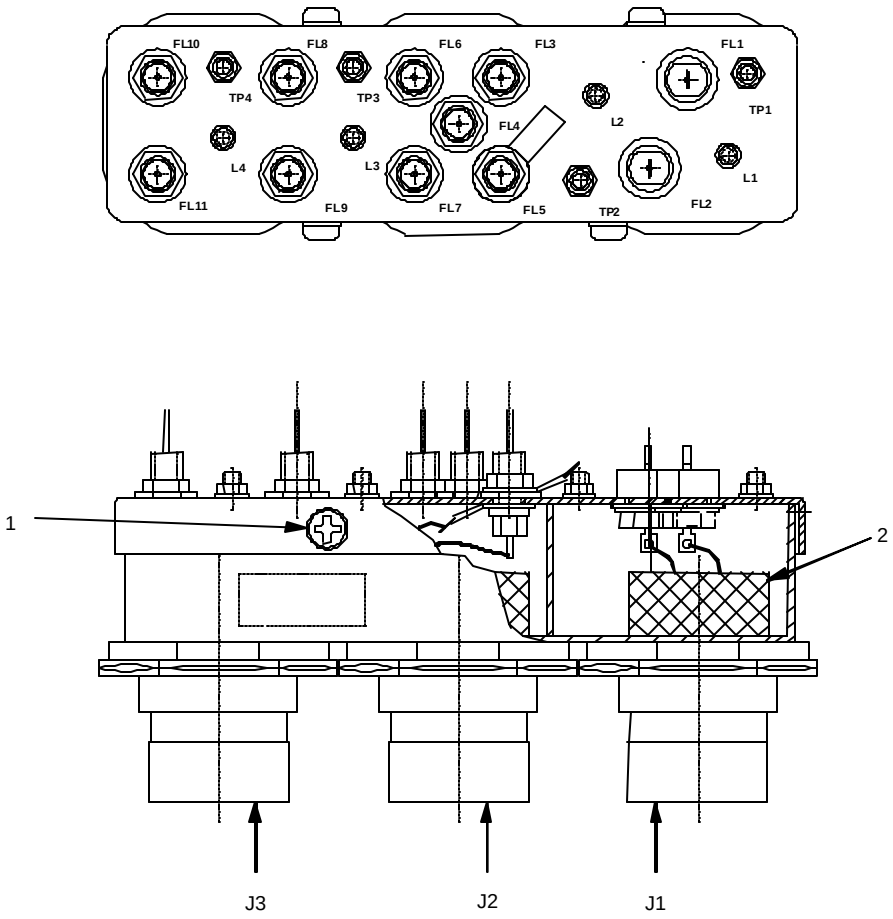

Figure 3-28. EMI Module, P/N AY6706705-1, Component Locations

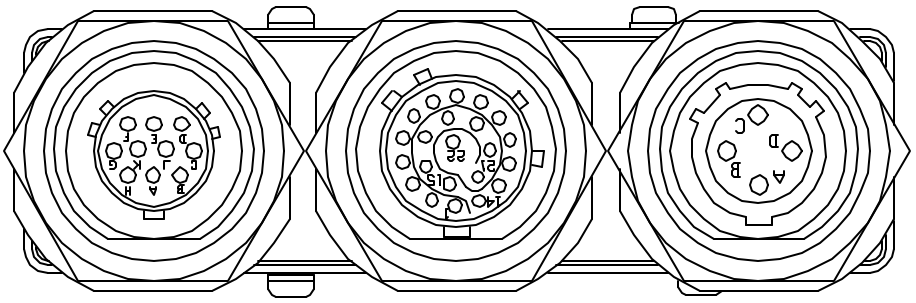

Figure 3-29. EMI Module, P/N AY6706705-1, Connector Pin Locations

Table 3-22. EMI Module Wiring

WIRE NO.	COLOR	FROM		TO		WIRE TYPE
		COMPONENT	POINT	COMPONENT	POINT	
1	WHT	J1	A	TP1	IN	M16878/4-18-9
2		L1	1	TP1	IN	PART OF L1
3		L1	2	FL1	IN	PART OF L1
4	BLK	J1	B	TP2	IN	M16878/4-18-0
5		L2	1	TP2	IN	PART OF L2
6		L2	2	FL2	IN	PART OF L2
7	WHT	J2	3	FL3	IN	M16878/4-22-9
8	WHT	J2	2	FL4	IN	M16878/4-22-9
9	BLK	J2	7	FL5	IN	M16878/4-22-0
10	BLK	J2	1	E1	IN (FL3)	M16878/4-22-0
11	WHT	J3	D	FL6	IN	M16878/4-22-9
12	WHT	J3	E	FL7	IN	M16878/4-22-9
13	WHT	J3	A	TP3	IN	M16878/4-22-9
14	WHT	L3	1	TP3	IN	M16878/4-22-9
15	WHT	L3	2	FL8	IN	M16878/4-22-9
16	BLK	J3	B	TP4	IN	M16878/4-22-0
17	BLK	L4	1	TP4	IN	M16878/4-22-0
18	BLK	L4	2	FL9	IN	M16878/4-22-0
19	*WHT*	J3	F	FL10	IN	M16878/4-22-9
20	*WHT*	J3	G	FL11	IN	M16878/4-22-9
21	*BLK*	J3	C	E1	IN (FL11)	M16878/4-22-0
22	BLK	E2 (FL5)	OUT	E3	OUT	M16878/4-22-0

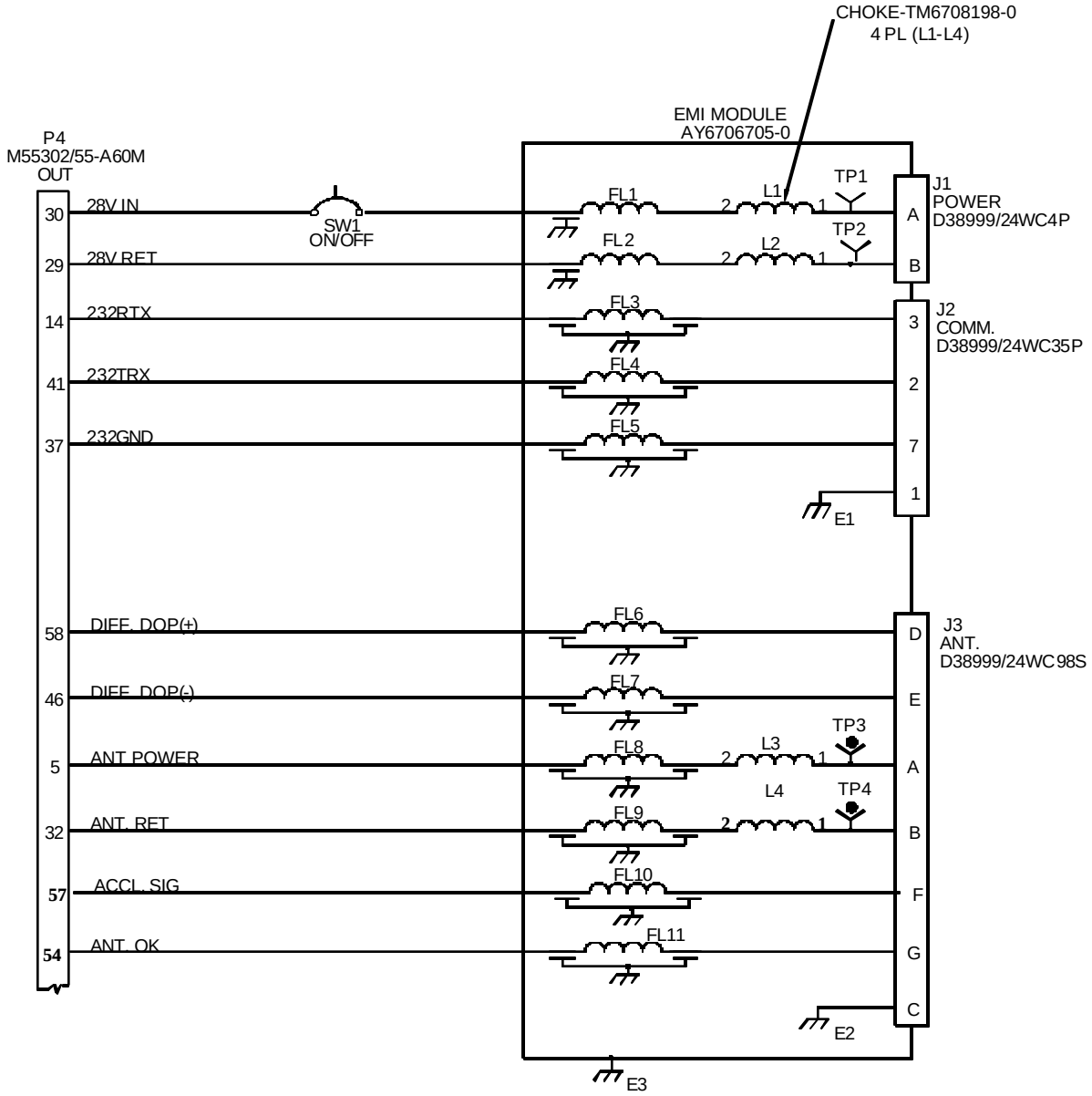

Figure 3-30. EMI Module, P/N AY6706705-1, Schematic Diagram

3.6.8.3 Communication Connector J2 Test

a. Verify resistance between J2/3 and FL3 (inside) is less than 0.5 Ω.
If not, check wire and replace pin J2/3.

b. Verify resistance between FL3 (inside) and FL3 (outside) is less than 0.5 Ω.
If not replace FL3.

c. Verify resistance between J2/2 and FL4 (inside) is less than 0.5 Ω.
If not check wire, replace pin J2/2.

d. Verify resistance between FL4 (inside) and FL4 (outside) is less than 0.5 Ω.
If not, replace FL4.

e. Verify resistance between J2/7 and FL5 (inside) is less than 0.5 Ω.
If not, check wire and replace pin J2/7.

f. Verify resistance between FL5 (inside) and FL5 (outside) is less than 0.5 Ω.
If not, replace FL5.

g. Verify resistance between J2/1 and chassis is less than 0.5 Ω.
If not, check wire, replace J2/1.

3.6.8.4 Antenna Connector J3 Test

a. Verify resistance between J3/A and TP3 is less than 0.5 Ω.
If not, check wire replace pin J3/A.

b. Verify resistance between TP3 and FL8 (inside) is less than 0.5 Ω.
If not, check wire, replace L3.

c. Verify resistance between FL8 (inside) and FL8 (outside) is less than 0.5 Ω.
If not, replace FL8.

d. Verify resistance between J3/B and TP4 is less than 0.5 Ω.
If not, check wire, replace pin J3/B.

e. Verify resistance between TP4 and FL9 (inside) is less than 0.5 Ω.
If not, check wire, replace L4.

f. Verify resistance between FL9 (inside) and FL9 (outside) is less than 0.5 Ω.
If not, replace FL9.

g. Verify resistance between J3/C and chassis is less than 0.5 Ω.
If not check wire, replace pin J3/C.

h. Verify resistance between J3/D and FL6 (inside) is less than 0.5 Ω.
If not, check wire replace pin J3/D.

i. Verify resistance between FL6 (inside) and FL6 (outside) is less than 0.5 Ω.
If not, replace FL6.

j. Verify resistance between J3/E and FL7 (inside) is less than 0.5 Ω.
If not, check wire, replace pin J3/E.

k. Verify resistance between FL7 (inside) and FL7 (outside) is less than 0.5 Ω.
If not, replace FL7.

l. Verify resistance between J3/F and FL10 (inside) is less than 0.5 Ω.
If not, check wire replace pin J3/F.

m. Verify resistance between FL10 (inside) and FL10 (outside) is less than 0.5 Ω. If not, replace FL10.

n. Verify resistance between J3/G and FL11 (inside) is less than 0.5 Ω. If not, check wire, replace pin J3/G.

o. Verify resistance between FL11 (inside) and FL11 (outside) is less than 0.5 Ω. If not, replace FL11.

SECTION VII. MOTHERBOARD CCA, P/N AY6706706-0

SECTION CONTENTS

		Page
3.7	MOTHERBOARD CCA, P/N AY6706706-0.	3-86
3.7.1	GENERAL.	3-86
3.7.2	TEST EQUIPMENT AND SPECIAL TOOLS REQUIRED.	3-86
3.7.3	MATERIALS REQUIRED.	3-87
3.7.4	GENERAL REPAIR REQUIREMENTS.	3-87
3.7.5	REMOVAL.	3-88
3.7.6	INSTALLATION.	3-89
3.7.7	INSPECTION.	3-89
3.7.8	CONTINUITY TEST.	3-89

3.7 MOTHERBOARD CCA, P/N AY6706706-0

3.7.1 General

The following paragraphs provide repair procedures and maintenance information for the CPDU Motherboard CCA, P/N AY6706706-0. Source, maintenance, and recoverability codes are listed below:

U.S. Army	PADDD
U.S. Marine Corps	PAFFF

3.7.2 Test Equipment and Special Tools Required

Test equipment and special tool requirements are listed in Table 3-23. Unless otherwise specified, the test equipment and special tools listed below will be used for testing the Motherboard CCA. Each commercially available item of test equipment can be replaced by equipment equivalent to that listed.

Table 3-23. Test Equipment and Special Tools Required

Nomenclature	Part/Spec. No.	Appendix C Figure 27 Item No.
Digital Multimeter	Fluke, Model 77-2	5
Torque Wrench	TS30	6
ESD Work Station Kit	M87893-02	13

3.7.3 Materials Required

Repair materials and other consumable item requirements are listed in Table 3-24.

Table 3-24. Materials Required

Nomenclature	Part/Spec. No.	Appendix F Item No.
Insulation Compound	MILI46058TYPE1B31	9
Primer	747-55	17
Sealing Compound	83-31	16
Solder	SN63WRMAP3	23
Bus Wire	QQ-W-343/S-26-S1T	28

3.7.4 General Repair Requirements

The following general requirements apply to the repair of the Motherboard CCA.

NOTE

The Motherboard CCA contains no electrostatic discharge sensitive devices, therefore ESD procedures are not required if CCA has been disconnected and removed from CPDU.

a. Apply 747-55 primer and 83-831 sealing compound to connector screw threads before attaching connector to CCA.

b. Do not cut connector leads.

c. Do not bend connector leads.

d. For connectors J1 and J3, maximum lead protrusion shall not exceed 0.060 in. from bottom of CCA.

e. For connectors J4 and J5, connector height shall not exceed 0.580 in. as measured
from top of CCA.

f. Use only SN63WRMAP3 tin/lead solder or approved equivalent.

CAUTION

Insulation compound must not be applied to any connector pins. Inadvertent application of compound to connector pins may require replacement of connector.

g. Apply uniform coating of MILI46058TYPE1B31 insulation compound, 0.003±0.002 in. thick, where compound has been removed during CCA repairs.

h. Ensure that connector is properly oriented before installing.

i. Install jumper wires in accordance with Table 3-25. Use QQ-W-343/S-26-S1T bus wire.

Table 3-25. Jumper Wire Configuration

Jumper	Connection
JP1	No Connection
JP2	No Connection
JP3	1-2
JP4	No Connection
JP5	No Connection

3.7.5 Removal

Refer to Figure 3-31. Remove Motherboard CCA from card cage as follows:

CAUTION

The CPDU contains assemblies subject to damage by electrostatic discharge. Use approved grounding procedures before touching, removing, or inserting circuit card assemblies.

a. Perform steps a. through g. of para. 3.2.5.

b. Disconnect CPDU wiring harness connectors from J4 (7) and J5 (8).

c. Remove two screws (1) and two washers (2) from stiffener (3).

d. Remove four screws (4) and four washers (5) from Motherboard CCA (6).

e. Remove Motherboard CCA from card cage.

3.7.6 Installation

Refer to Figure 3-31. Install Motherboard CCA in card cage as follows:

CAUTION

The CPDU contains assemblies subject to damage by static electricity. Use approved grounding procedures before touching, removing, or inserting circuit card assemblies.

a. Position Motherboard CCA (6) over card cage screw holes.

b. Apply primer and sealing compound to six screws.

c. Attach Motherboard CCA (6) to card cage with two long screws (1), two washers (2),
four short screws (4), and four washers (5). Torque screws to 9 in. lb.

d. Connect CPDU wiring harness to connectors J4 (7) and J5 (8).

e. Perform steps b. through g. of para. 3.2.6.

3.7.7 Inspection

Inspect Motherboard CCA as follows:

a. Inspect all components for security of attachment.

b. Inspect all parts for damage, wear, and deterioration.

c. Inspect PWB for nicks, scoring, dents, scratches, and broken runs.

d. Inspect all threaded parts for crossed, stripped, or otherwise damaged threads.

e. Ispect threaded inserts and nutplates for security of attachment.

f. Inspect connectors for broken, bent, recessed, loose, damaged, or missing pins.

3.7.8 Continuity Test

Refer to Figures 3-32 and 3-33. Check Motherboard CCA wiring continuity as follows:

a. Set DMM to RESISTANCE mode.

b. Set DMM to OHMS X 1 mode.

c. Zero DMM to eliminate internal resistance of meter and resistance of test leads.

d. Measure continuity between connector pins and CCA in accordance with Figure 3-33. Resistance should not exceed 0.5 ohm.

e. If incorrect readings are noted in step d., repair PWB or connector.

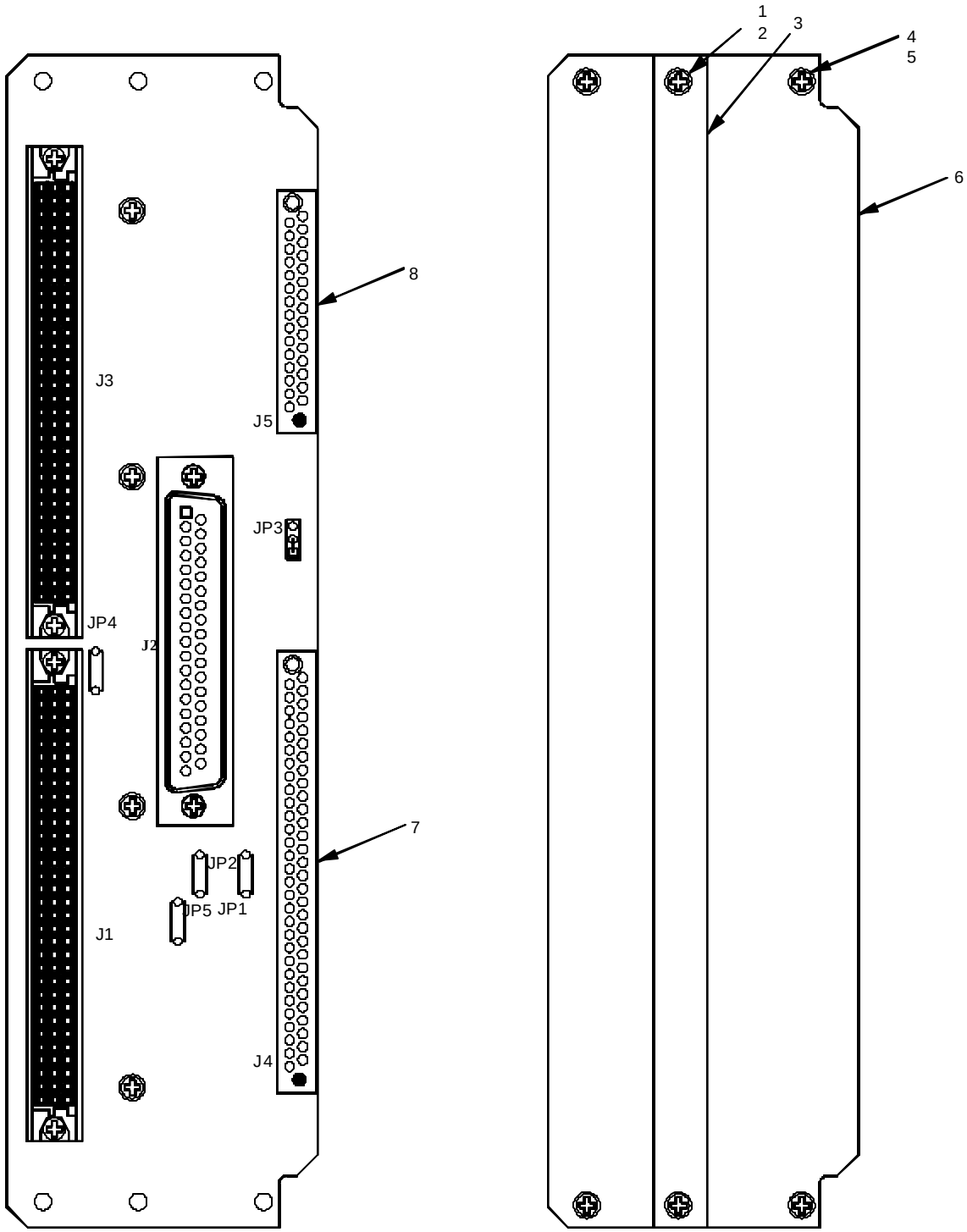

Figure 3-31. Motherboard CCA, P/N AY6706706-0, Component Locations

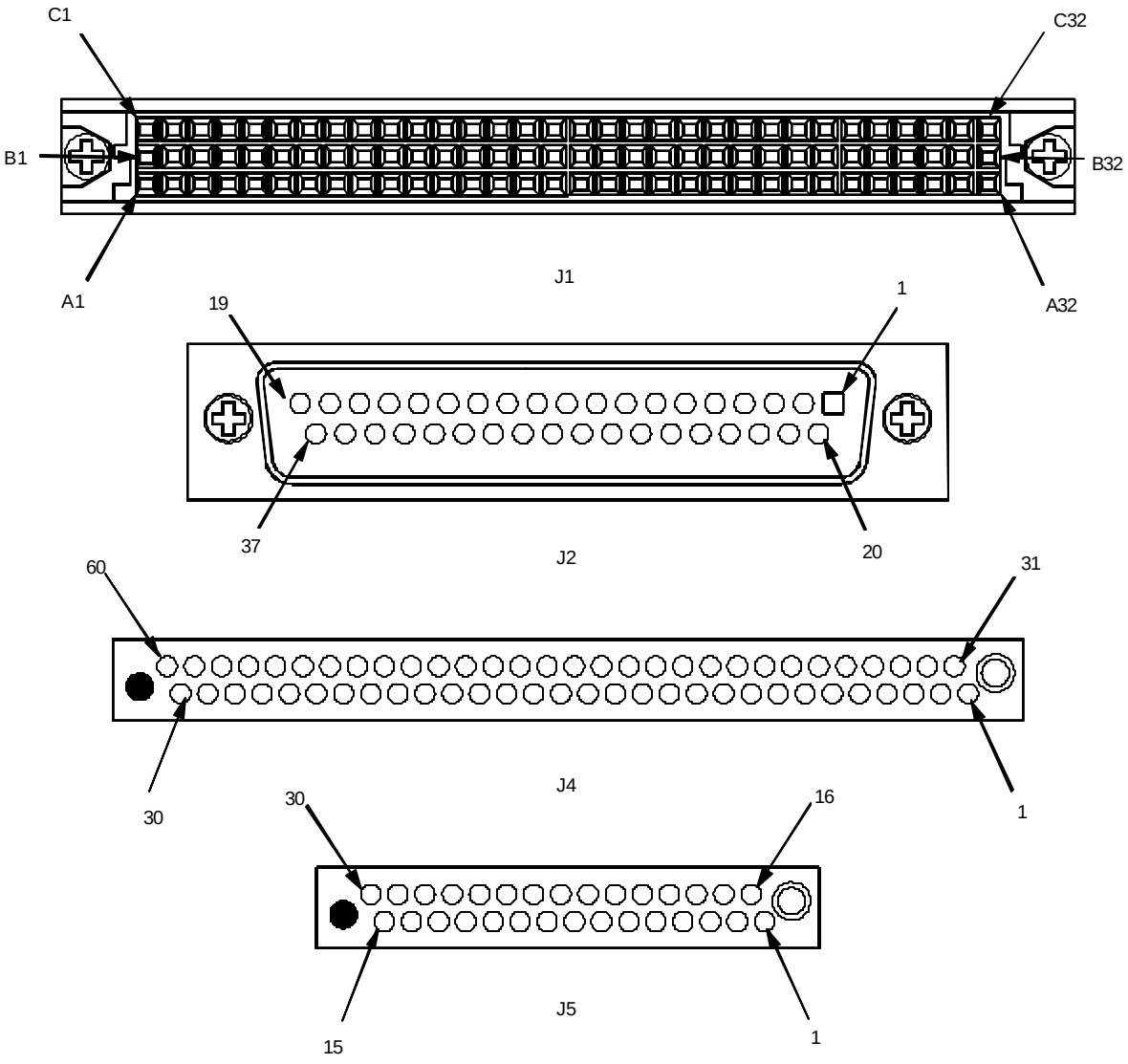

Figure 3-32. Motherboard CCA, P/N AY6706706-0, Connector Pin Locations

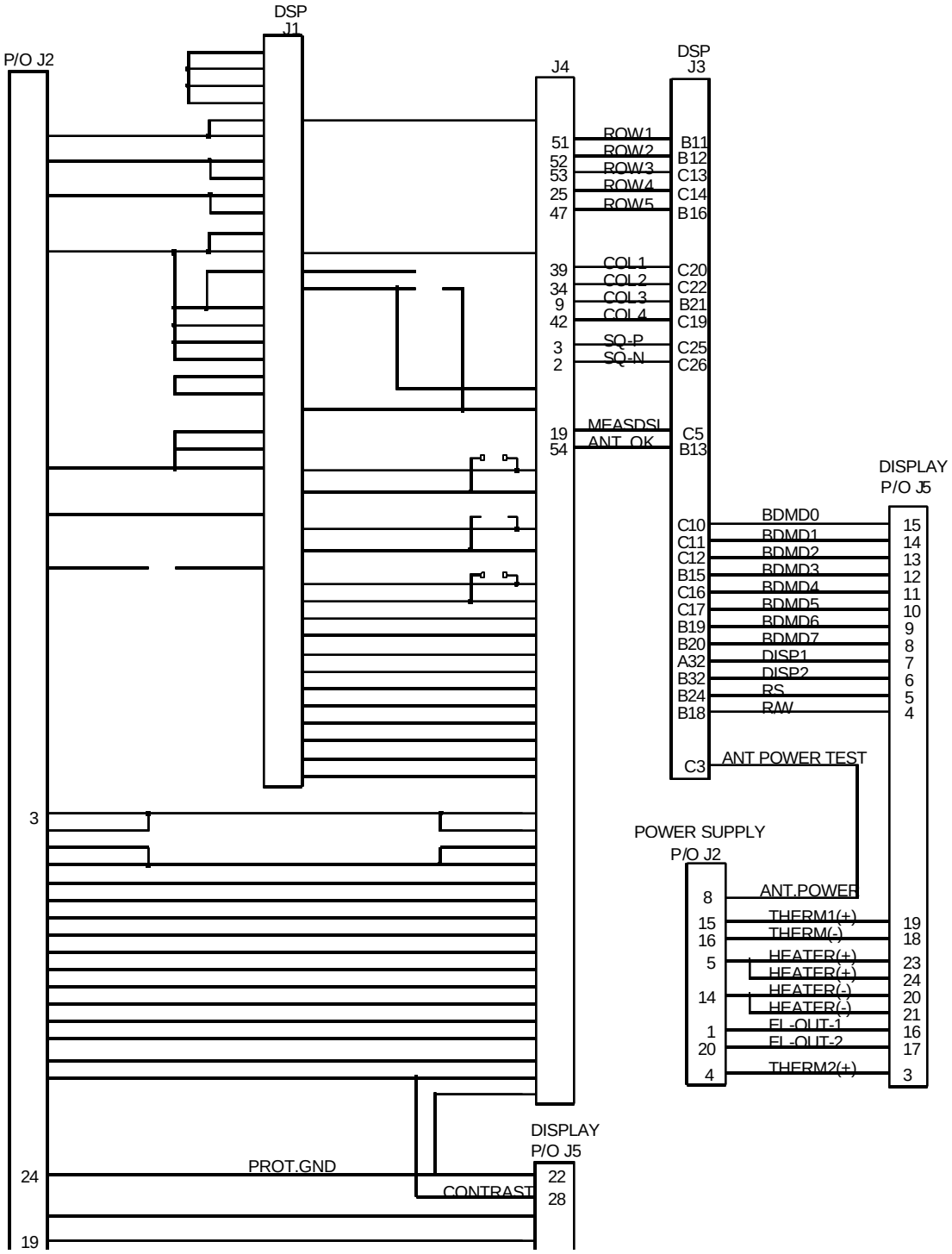

Figure 3-33. Motherboard CCA, P/N AY6706706-0, Schematic Diagram

SECTION VIII. DOPPLER AMPLIFIER CCA, P/N AY6706566-0

SECTION CONTENTS

Page

3.8 DOPPLER AMPLIFIER CCA, P/N AY6706566-0. 3-93
3.8.1 GENERAL. 3-93
3.8.2 TEST EQUIPMENT AND SPECIAL TOOLS REQUIRED. 3-93
3.8.3 MATERIALS REQUIRED. 3-94
3.8.4 GENERAL REPAIR REQUIREMENTS. 3-94
3.8.5 REMOVAL. 3-95
3.8.6 INSTALLATION. 3-96
3.8.7 INSPECTION. 3-96
3.8.8 FUNCTIONAL TEST. 3-99
3.8.9 TROUBLESHOOTING. 3-103

3.8 DOPPLER AMPLIFIER CCA, P/N AY6706566-0

3.8.1 General

The following paragraphs provide repair procedures and maintenance information for the Transceiver Doppler Amplifier CCA, P/N AY6706566-0. Source, maintenance, and recoverability codes are listed below:

U.S. Army	PADDD
U.S. Marine Corps	PAFHD

3.8.2 Test Equipment and Special Tools Required

Test equipment and special tool requirements are listed in Table 3-26. Unless otherwise specified, the test equipment and special tools listed below will be used for testing the Doppler Amplifier CCA. Each commercially available item of test equipment can be replaced by equipment equivalent to that listed.

Table 3-26. Test Equipment and Special Tools Required

Nomenclature	Part/Spec. No.	Appendix C Figure 27 Item No.
Coaxial Cables, BNC, Male-To-Male, 50 Ω, (4)	Local Manufacture	N/A
Digital Counter	Fluke, Model 7250A	42
Digital Multimeter	Fluke, Model 77-2	5
Electronic Equipment Tool Kit	PPL863	11
Function Generator	WaveTek, Model 178	41
Oscilloscope	Hewlett Packard, Model 1070B	44
Power Supply, DC (0-40 V, 1 A)	Lambda, LLS-5040	35
Test Set	RSL, P/N AY6708018-0	37
ESD Work Station Kit	M87893-02	13

3.8.3 Materials Required

Repair materials and other consumable item requirements are listed in Table 3-27.

Table 3-27. Materials Required

Nomenclature	Part/Spec. No.	Appendix F Item No.
Adhesive	MIL-A-46146, Type III	19
Insulation Compound	MILI46058TYPE1B31	9
Solder	SN63WRMAP3	23
Antistatic Bag	3271576	33

3.8.4 General Repair Requirements

Refer to Figure 3-35. The following general requirements apply to the repair of the Doppler Amplifier CCA.

CAUTION

The Doppler Amplifier CCA contains components subject to damage by electrostatic discharge. Use approved grounding procedures before touching, removing, or inserting CCA.

a. Ensure that components are properly oriented before installing.

b. Square mounting pad designates:

1. P1 of integrated circuit
2. Emitter of transistor
3. Cathode of diode
4. Positive lead of capacitor

c. Do not bend leads of components L1, L2, and T1.

d. Bond the following components to PWB with MIL-A-46146, Type III, adhesive before applying insulation compound.

1. C7 C15 C21-C24 C26
2. L1 L2 T1

e. Use only SN63WRMAP3 tin/lead solder or approved equivalent.

f. Apply uniform coating of MILI46058TYPE1B31 insulation compound, 0.003±0.002 in. thick, where compound has been removed during CCA repairs.

g. Do not apply insulation compound to mounting edge (1/4 inch) on either side of PWB.

h. Do not apply insulation compound to terminals E1 thru E6.

3.8.5 Removal

Refer to Figure 3-34. Remove Doppler Amplifier CCA from transceiver assy as follows:

CAUTION

The Doppler Amplifier CCA and transceiver assembly contain components that are subject to damage by electrostatic discharge. Use approved grounding procedures before touching, removing, or inserting CCA.

a. Remove eight screws (3), eight lockwashers (4), and eight flat washers (5) from CCA cover (2).

b. Remove cover (2).

c. Tag and identify six wires connected to CCA.

d. Using soldering iron, disconnect six wires.

e. Remove 12 screws (6), 12 lockwashers (7), and 12 flat washers (8) from CCA (9).

f. Remove CCA (9) from transceiver assy (1) and place in antistatic bag.

3.8.6 Installation

Refer to Figure 3-34. Install Doppler Amplifier CCA in transceiver assy as follows:

CAUTION

The Doppler Amplifier CCA and transceiver assembly contain components that are subject to damage by electrostatic discharge. Use approved grounding procedures before touching, removing, or inserting CCA.

a. Place CCA (9) over screw holes in transceiver assembly (1). Observe correct orientation of CCA.

b. Attach CCA (9) to transceiver assembly (1) with 12 screws (6), 12 lockwashers (7), and 12 flat washers (8).

c. Using soldering iron, connect six wires to CCA.

d. Remove identification tags from wires.

e. Attach cover (2) with eight screws (3), eight lockwashers (4), and eight flat washers (5).

3.8.7 Inspection

Refer to Figure 3-35. Inspect Doppler Amplifier CCA as follows:

a. Inspect all components for security of attachment.

b. Inspect all parts for damage, wear, and deterioration.

c. Inspect all parts for nicks, scoring, dents, scratches, and broken runs.

d. Inspect all electronic components for indication of overheating, cracked bodies, loose terminals, broken leads, cold solder joints, and other indications of damage or deterioration.

e. In case of physical damage, replace or repair the damaged part.

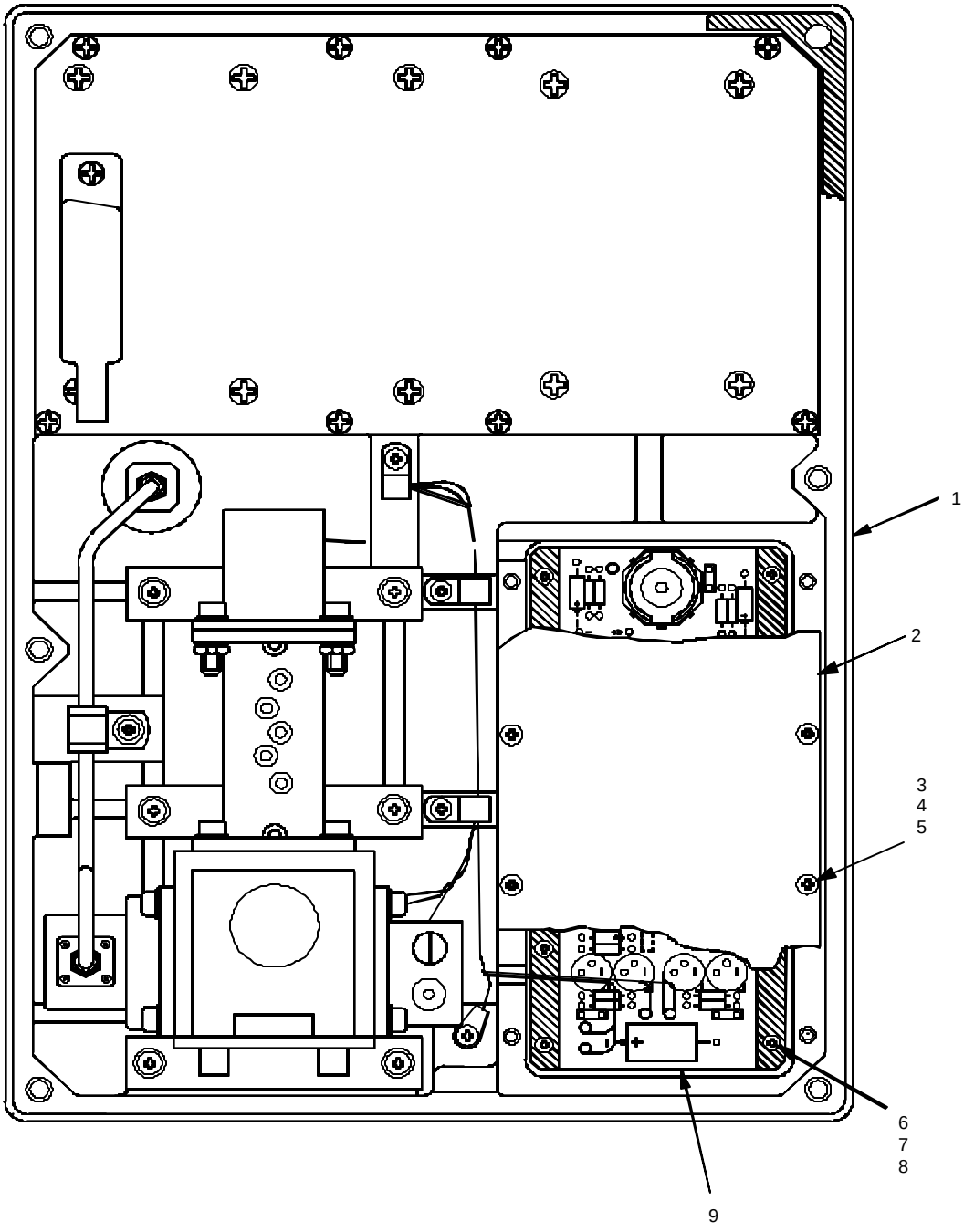

Figure 3-34. Transceiver Assy, P/N AY6706571-0, AY6706571-2

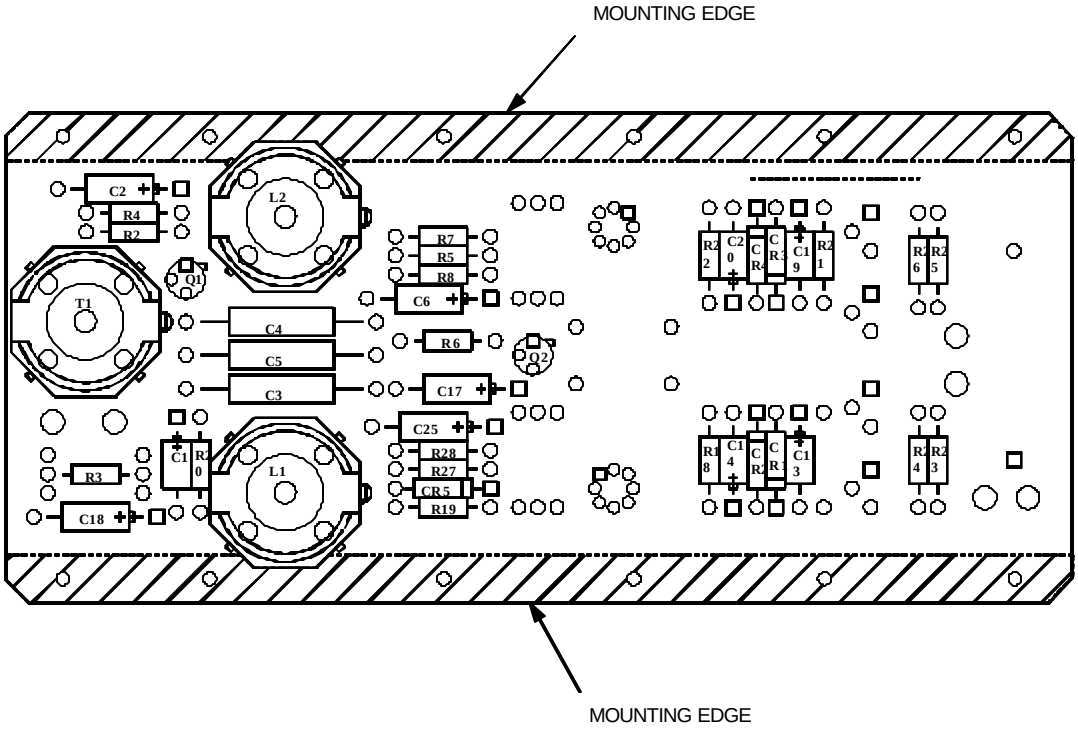

Figure 3-35. Doppler Amplifier CCA, P/N AY6706566-0, Component Locations

3.8.8 Functional Test

The functional test setup for the Doppler Amplifier CCA is as shown in Figure 3-36. Figures 3-37 and 3-38 are detailed illustrations of the Doppler Amplifier CCA tester and its schematic. Perform functional test as follows:

3.8.8.1 Test Set-up

a. Turn on power supply. Adjust voltage to +18∀0.2 VDC. Turn off power supply.

b. Connect power supply to test set PS+ and PS- . Observe correct polarity.

c. Connect lead E1 (red) to TP E1 on CCA.

d. Connect lead E2 (black) to TP E2 on CCA.

e. Turn on signal generator, connect to oscilloscope and set output wave as follows:

1. Frequency - 50±5 k
2. Function - sine wave
3. Voltage - 2.5±0.3 Vp-p

f. Turn off signal generator and connect to SIGNAL GENERATOR jack on test set using BNC cable.

g. Set attenuator to 100 dB on test set.

h. Connect lead E3 (blue) to TP E3 on CCA.

i. Connect lead E4 (white) to TP E4 on CCA.

j. Connect lead E6 (green) to TP E6 on CCA.

k. Connect lead E5 (yellow) to TP E5 on CCA.

l. Connect scope to test set with BNC cables as follows:

1. Chan1 to Chan 1 entry in test set.
2. Chan 2 to Chan 2 entry in test set.

m. Set scope as follows:

1. Input Scale - 5 V/cm both channels
2. Time Scale - 10 µsec/cm
3. Sync Mode - Auto
4. Display Mode - Alt

n. Connect counter to COUNTER jack on test set using BNC cable.

3.8.8.2 Power Source and Voltage Circuit Test

a. Turn on power supply.

b. Measure with DMM voltage between CR5/cathode and E2 (GND).
Verify voltage is 15±1 VDC. Check and replace R19 or CR5 if voltage is out of tolerance.

c. Measure with DMM voltage between C25 (+) and E2 (GND).
Verify voltage is 9±1 VDC. Check and replace R27 or R28 if voltage is out of tolerance.

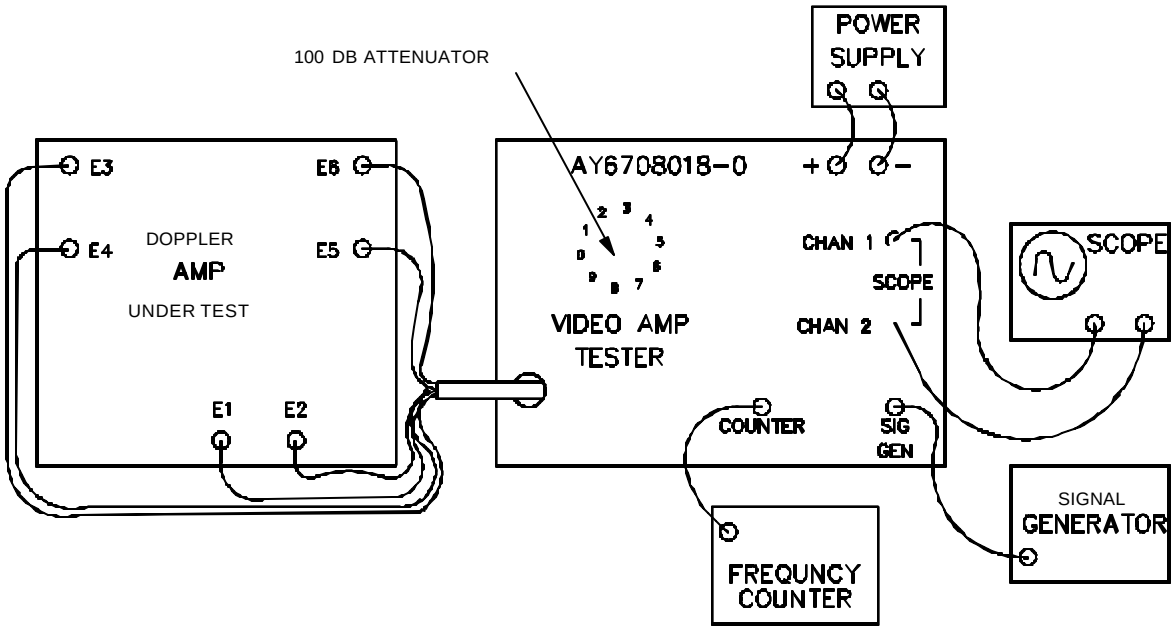

Figure 3-36. Doppler Amplifier CCA Test Set-up

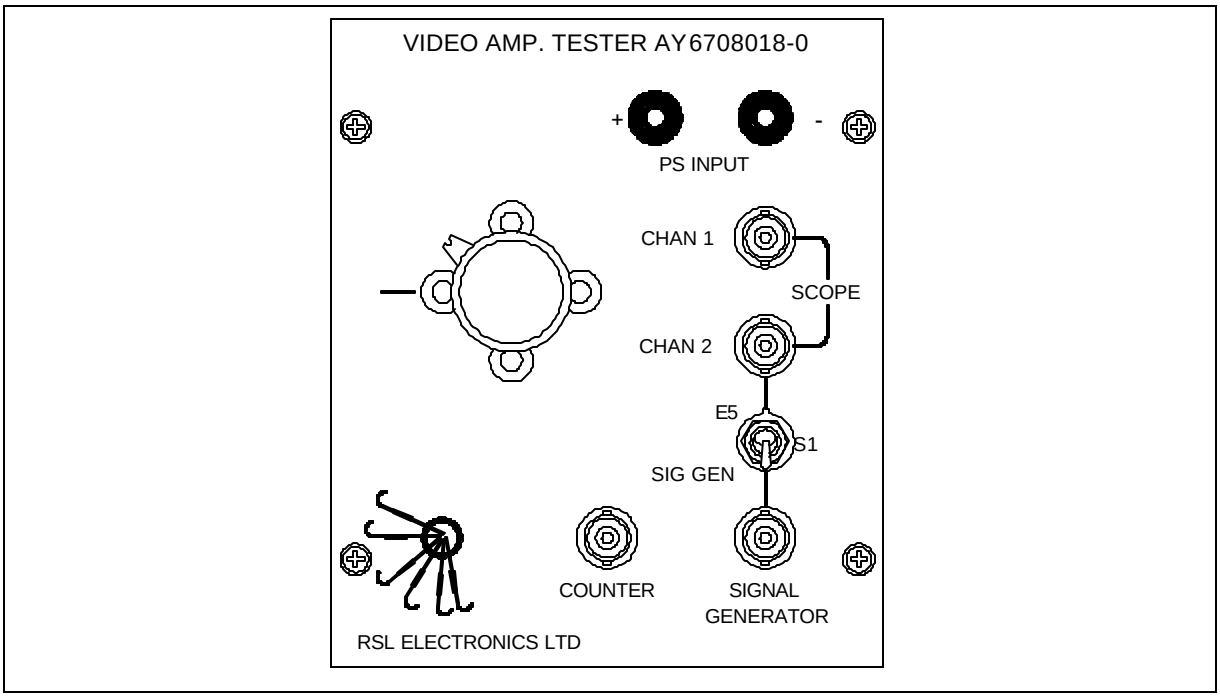

Figure 3-37. Doppler Amplifier CCA Tester, P/N AY6708018-0

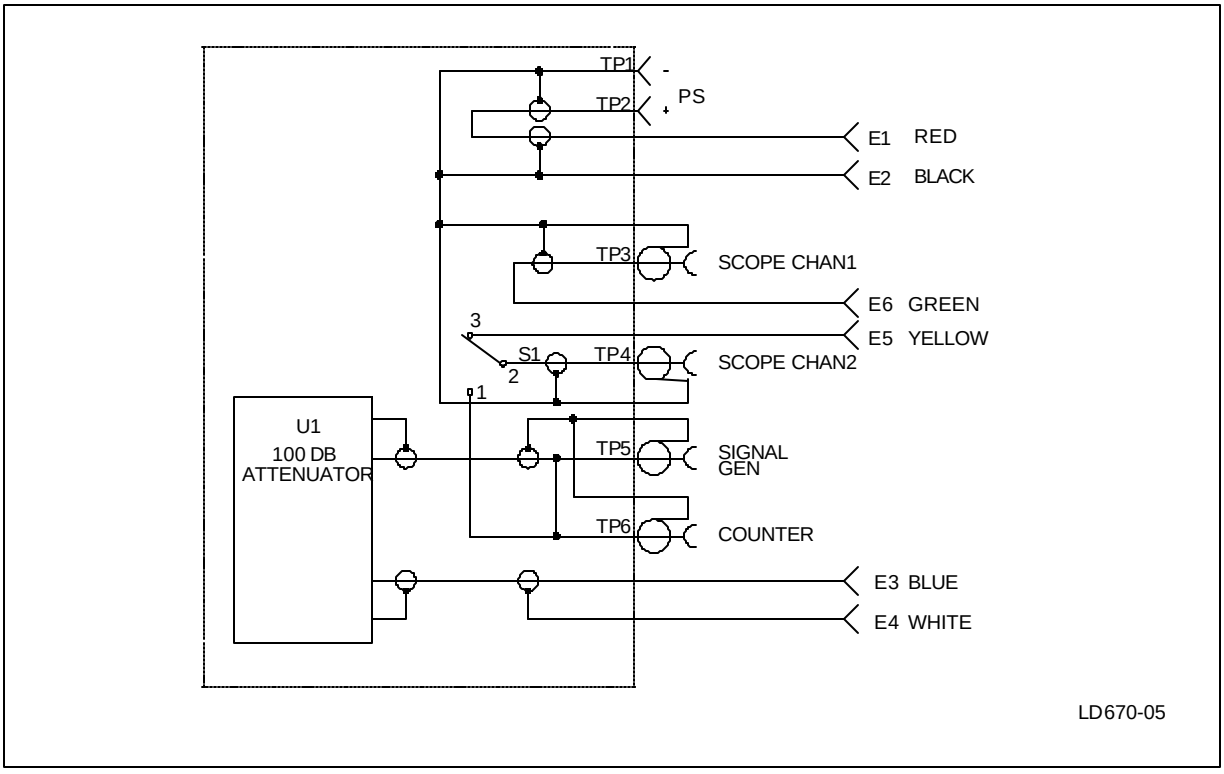

Figure 3-38. Doppler Amplifier CCA Tester Schematic

3.8.8.3 Functionality Test

a. Turn on oscilloscope.

b. Turn on frequency counter.

c. Turn on signal generator. Set switch S1 to position E5.
Observe on oscilloscope that sine wave is present on both channels.

d. Measure signal characteristics of both sine waves.

e. Verify on channel 2 that amplitude at E5 is greater than 2.5 Vp-p.

f. Verify on channel 1 that amplitude at E6 is greater than 2.5 Vp-p.

g. Observe that signals at E5 and E6 are in reverse polarity to each other.

h. If signal on channel 2 is low or distorted, check Dopp(+) channel. See para. 3.8.8.4.

i. If signal on channel 1 is low or distorted, check Dopp(-) channel. See para. 3.8.8.5.

j. If both channels are distorted check main channel. See para. 3.8.8.6.

3.8.8.4 DOPP(+) Channel Test

a. Check that signal at U1/6 is greater than 2.5 Vp-p.
If signal is low or distorted, replace U1.

b. If high level of signal is distorted, replace Q5 and CR1.

c. If low level of signal is distorted, replace Q6 and CR2.

3.8.8.5 DOPP(-) Channel Test

a. Check that signal at U2/6 is greater than 2.5 Vp-p.
If signal is low or distorted, replace U2.

b. If high level of signal is distorted, replace Q3 and CR3.

c. If low level of signal is distorted, replace Q4 and CR4.

3.8.8.6 Main Channel (Stage 1 and Stage 2) Test

a. Set attenuator on the test fixture to 40 db. Using oscilloscope probe, measure signal at Q1/base. If signal is distorted, replace Q1.
If signal is still distorted, replace T1.

b. Check signal at Q1/collector. Verify a signal gain of 100 min. Replace Q1 if necessary.

c. Check signal at Q2/base. If signal is low or distorted, check and replace L1, L2, one at a time.

d. Check the signal at Q2/collector. Verify a gain of 40 min (Q2/base to Q2/collector). Set attenuator on test fixture to higher attenuation if signal is saturated. Replace Q2 if necessary.

e. Check signal at R9, R15 junction. If signal is low or distorted replace C7, C8, R9.

3.8.8.7 Maximum Output Measurement Saturation Test

a. Disconnect clip E5 (yellow) from point E5 of CCA. Channel 1 remains at E6 (green) clip.

b. On test set, set switch S1 to SIGNAL GEN.

c. Increase input amplitude by stepping attenuator in 10-db steps until CCA output is saturated. Verify that signal amplitude on channel 1 is greater than 12 Vp-p.

d. Remove clip E6 (green) from test point E6 and connect to E5.

e. Verify CCA output is saturated. Verify signal amplitude on channel 1 is greater than 12 Vp-p.

f. If signal at test point E6 is low or distorted, check DOPP(-) channel. See para. 3.8.8.5.

g. If signal at test point E5 is low or distorted, check DOPP (+) channel. See para. 3.8.8.4.

h. If both channels are not saturated, check main channel. See para. 3.8.8.6.

3.8.8.8 Bandwidth Test

a. Disconnect clip E5 from point E5 on CCA. Channel 1 remains at E6 DOPP(-).

b. On test set, set switch S1 to SIGNAL GEN, set attenuator to 100 db.

c. Turn on signal generator.

d. Verify input voltage (channel 2) is 2.5 Vp-p and attenuator is set to 100 db.

e. Set signal frequency to 10 kHz. Output readings should be equal or greater than 1.75 Vp-p.

f. Set signal frequency to 50 kHz. Output readings should be equal or greater than 2.5 Vp-p.

g. Set signal frequency to 100 kHz. Output readings should be equal or greater than 1.75 Vp-p.

h. Remove clip E6 (green) from point E6 and connect to point E5 DOPP(+).

i. Repeat steps d., e., f., and g. for DOPP(+) channel.

j. If signal at test point E6 is low or distorted, check DOPP(-) channel. See para. 3.8.8.5.

k. If signal at test point E5 is low or distorted, check DOPP (+) channel. See para. 3.8.8.4.

l. If both channels are distorted, check main channel. See para. 3.8.8.6.

3.8.9 Troubleshooting

Refer to Figure 3-39 for additional troubleshooting information. Refer to FO-4 for schematic diagram.

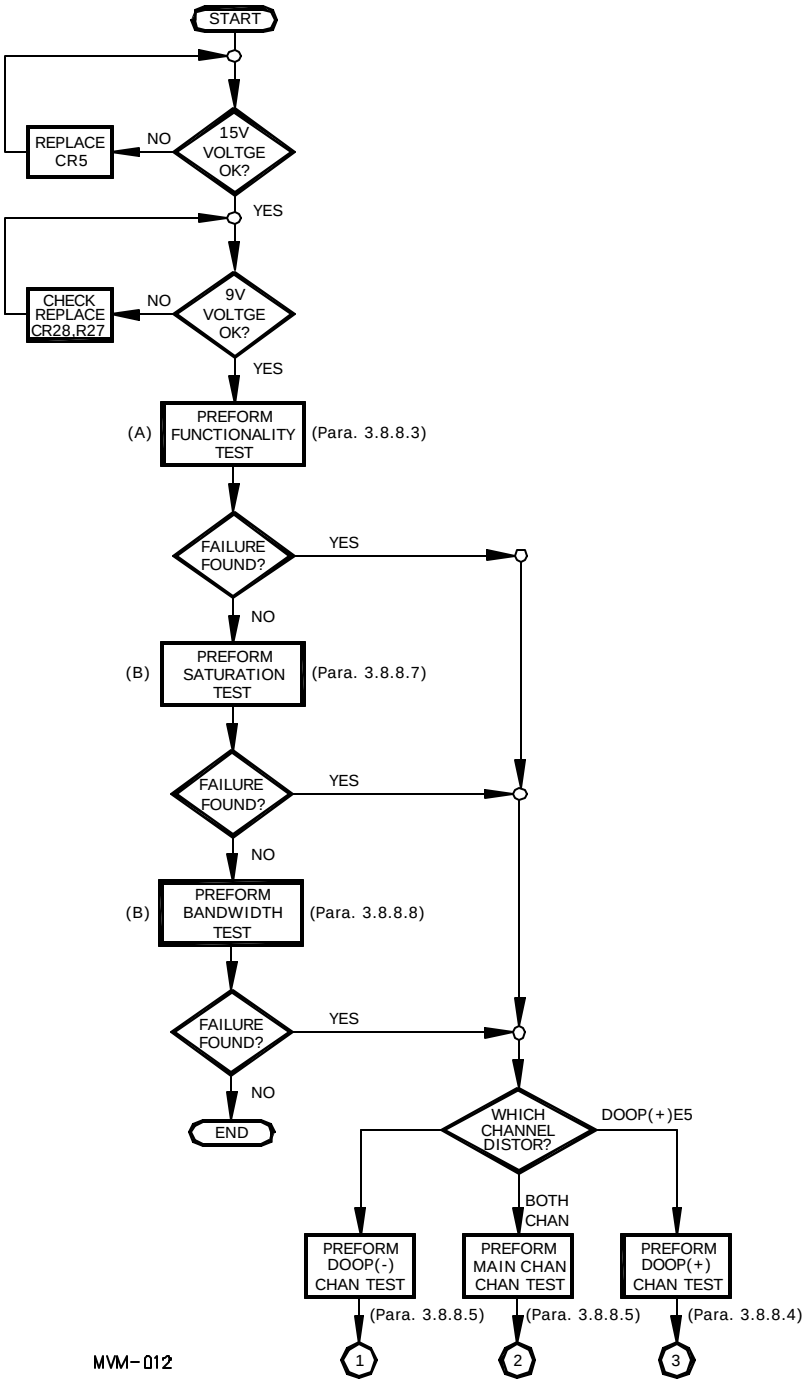

Figure 3-39. Doppler Amplifier CCA, P/N AY6706566-0, Troubleshooting Flowchart (Sheet 1 of 2)

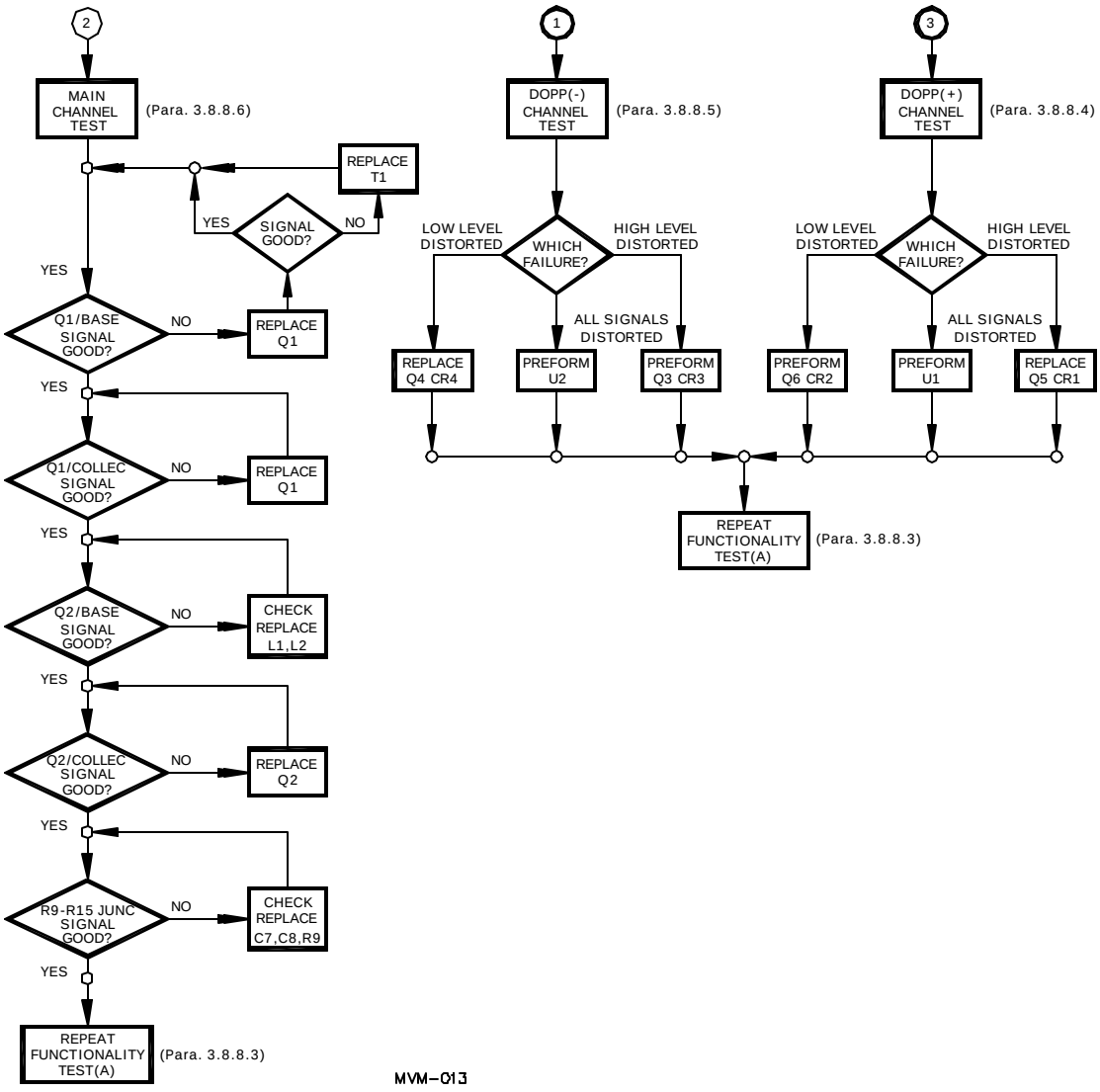

Figure 3-39. Doppler Amplifier CCA, P/N AY6706566-0, Troubleshooting Flowchart (Sheet 2 of 2)

SECTION IX. LINEAR POWER SUPPLY MODULE, P/N AY6706620-0

SECTION CONTENTS

		Page
3.9	LINEAR POWER SUPPLY MODULE, P/N AY6706620-0.	3-106
3.9.1	GENERAL.	3-106
3.9.2	TEST EQUIPMENT AND SPECIAL TOOLS REQUIRED.	3-106
3.9.3	MATERIALS REQUIRED.	3-107
3.9.4	GENERAL REPAIR REQUIREMENTS.	3-108
3.9.5	REMOVAL.	3-108
3.9.6	DISASSEMBLY.	3-109
3.9.7	ASSEMBLY.	3-109
3.9.8	INSTALLATION.	3-109
3.9.9	INSPECTION.	3-113
3.9.10	FUNCTIONAL TEST.	3-113
3.9.11	TROUBLESHOOTING.	3-116
3.9.12	OUTPUT POWER ADJUSTMENT PROCEDURE.	3-119

3.9 LINEAR POWER SUPPLY MODULE, P/N AY6706620-0

3.9.1 General

The following paragraphs provide repair procedures and maintenance information for the Transceiver Linear Power Supply Module, P/N AY67066620-0. Source, maintenance, and recoverability codes are listed below:

U.S. Army	PADDD
U.S. Marine Corps	PAFHD

3.9.2 Test Equipment and Special Tools Required

Test equipment and special tool requirements are listed in Table 3-28. Unless otherwise specified, the test equipment and special tools listed below will be used for testing the Linear Power Supply Module. Each commercially available item of test equipment can be replaced by equipment equivalent to that listed.

Table 3-28. Test Equipment and Special Tools Required

Nomenclature	Part/Spec. No.	Appendix C Figure 27 Item No.
Bit, No. 1 Cross tip (for torque driver)	TMP12A	12
Coaxial Cables, BNC/BNC	Local Manufacture, 4 ft long	N/A
Digital Multimeter	Hewlett Packard, Model 3478A	43
Electronic Equipment Tool Kit	PPL863	11
Oscilloscope	Hewlett Packard, Model 1070B	44
Power Supply, DC (0-40 V, 2 A)	Lambda, LLS-6040	25
Test Set	RSL, P/N AY6707943-0	38
Torque Wrench (0-30 in. lb)	TS30	6
ESD Work Station Kit	M87893-02	13

3.9.3 Materials Required

Repair materials and other consumable item requirements are listed in Table 3-29.

Table 3-29. Materials Required

Nomenclature	Part/Spec. No.	Appendix F Item No.
Adhesive	MIL-A-46146, Type III	1
Insulation Compound	MILI46058TYPE1B31	9
Lacing Tape	MIL-T-43435-B3/BLK	11
Sealing Compound	83-31	16
Primer	747-55	17
Silicone Compound	MIL-C-47113	22
Solder	SN63WRMAP3	23
Insulation Tubing	M22129-22-N	25
Bus Wire	QQ-W-343/S-22-S1T	29
Wire	MIL-W-16878/4-22-9	27
Antistatic Bag	3271576	33

3.9.4 General Repair Requirements

Refer to Figure 3-41. The following general requirements apply to the repair of the Linear Power Supply Module.

CAUTION

The Linear Power Supply Module contains components subject to damage by electrostatic discharge. Use approved grounding procedures before touching, removing or inserting module CCA.

a. Components shall be bonded to the Linear Power Supply board using MIL-A-46146 Type III, adhesive.

b. Components shall be mounted flush to board. No angle is allowed.

c. Use only SN63WRMAP3 tin/lead solder or approved equivalent.

CAUTION

Insulation compound must not be applied to any connector pins. Inadvertent application of compound to connector pins may require replacement of connector.

d. Apply uniform coating of MILI46058TYPE1B31 insulation compound, 0.003 ±0.002 inch thick, on printed side only, where compound has been removed during CCA repairs.

e. Ensure that connector is properly oriented before installing.

3.9.5 Removal

Refer to Figure 3-40. Remove Linear Power Supply Module from transceiver as follows:

CAUTION

The transceiver and Linear Power Supply Module each contain assemblies subject to damage by electrostatic discharge. Use approved grounding procedures before touching, removing or inserting module.

a. Loosen two screw locks (4) securing connector (5). Remove connector.

b. Remove eight screws (1), eight lock washers (2), and eight flat washers (3).

c. Remove Module (6) and place in antistatic bag.

3.9.6 Disassembly

Refer to Figures 3-41 and 3-42. Disassemble Linear Power Supply Module as follows:

a. Remove two spacers (1) from cover (2).
b. Tag and identify wires connected between CCA (4) and R10 .
c. Disconnect R10 from TP1 (8) and TP2 (9). Refer to Figure 3-42.
d. Remove six nuts (3) and attaching parts from CCA.
e. Remove four screws (5) attaching heat sink (6) to cover (2).
f. Remove heat sink (6) and CCA (4) from cover (2) and place in antistatic bag.

3.9.7 Assembly

Refer to Figures 3-41 and 3-42. Assemble Linear Power Supply Module as follows:

a. Install heat sink (6) and CCA (4) to cover (2).
b. Install four screws (5) to attach heat sink (6) to cover (2).
c. Install six nuts (3) and attaching part to CCA.
d. Reconnect R10 to TP1 (8) and TP2 (9). Refer to Figure 3-42.
e. Install two spacers (1) to cover (2).

3.9.8 Installation

Refer to Figure 3-40. Install Linear Power Supply Module as follows:

a. Perform adjustment IAW para. 3.9.12.
b. Install Linear Power Supply Module (6).
c. Install eight screws (1), eight lock washers (2), and eight flat washers (3).
d. Plug connector (5) and secure connector by fastening two screw locks (4).

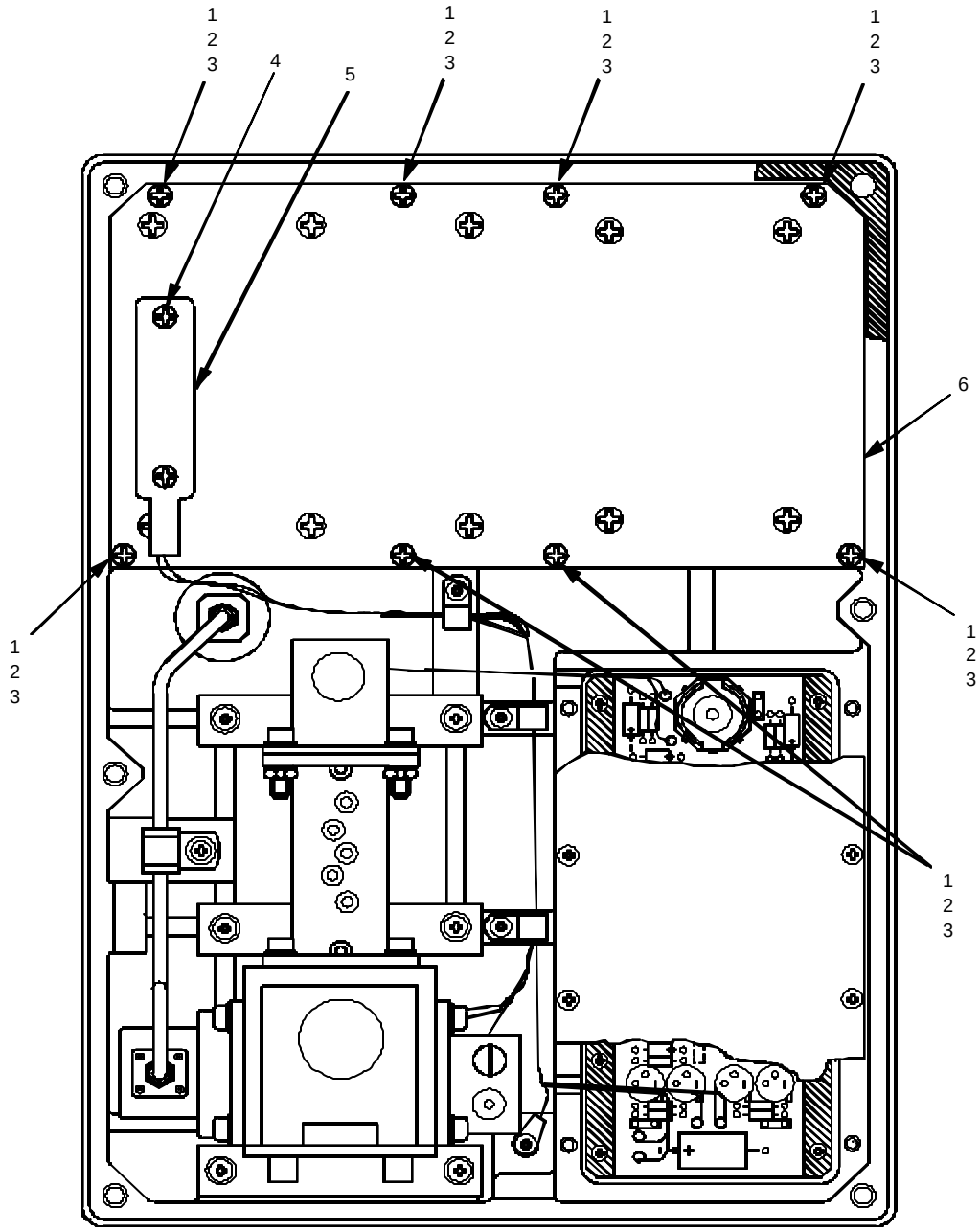

Figure 3-40. Transceiver Assembly, P/N AY6706571-0, AY6706571-2

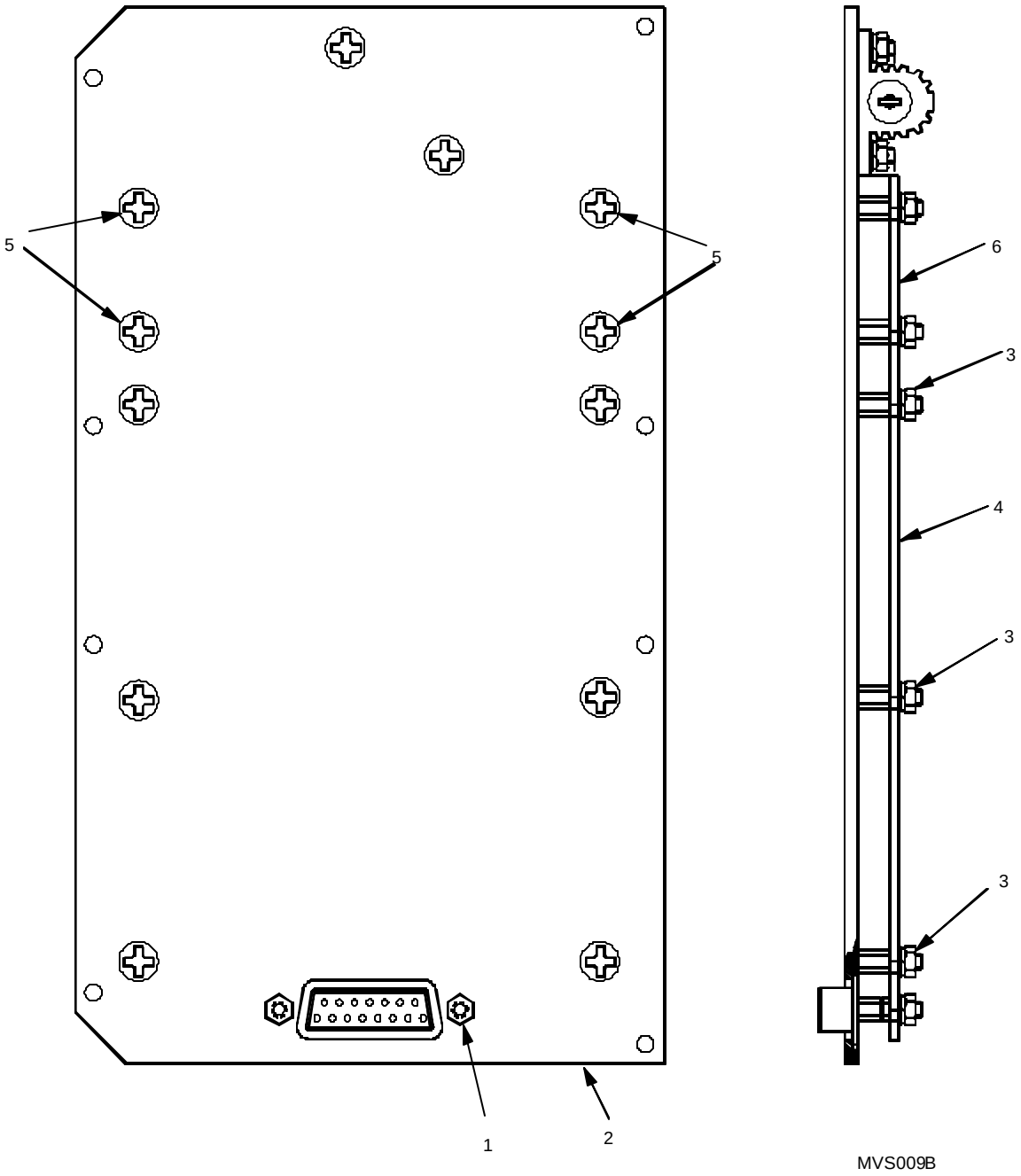

Figure 3-41. Linear Power Supply Module, P/N AY6706620-0

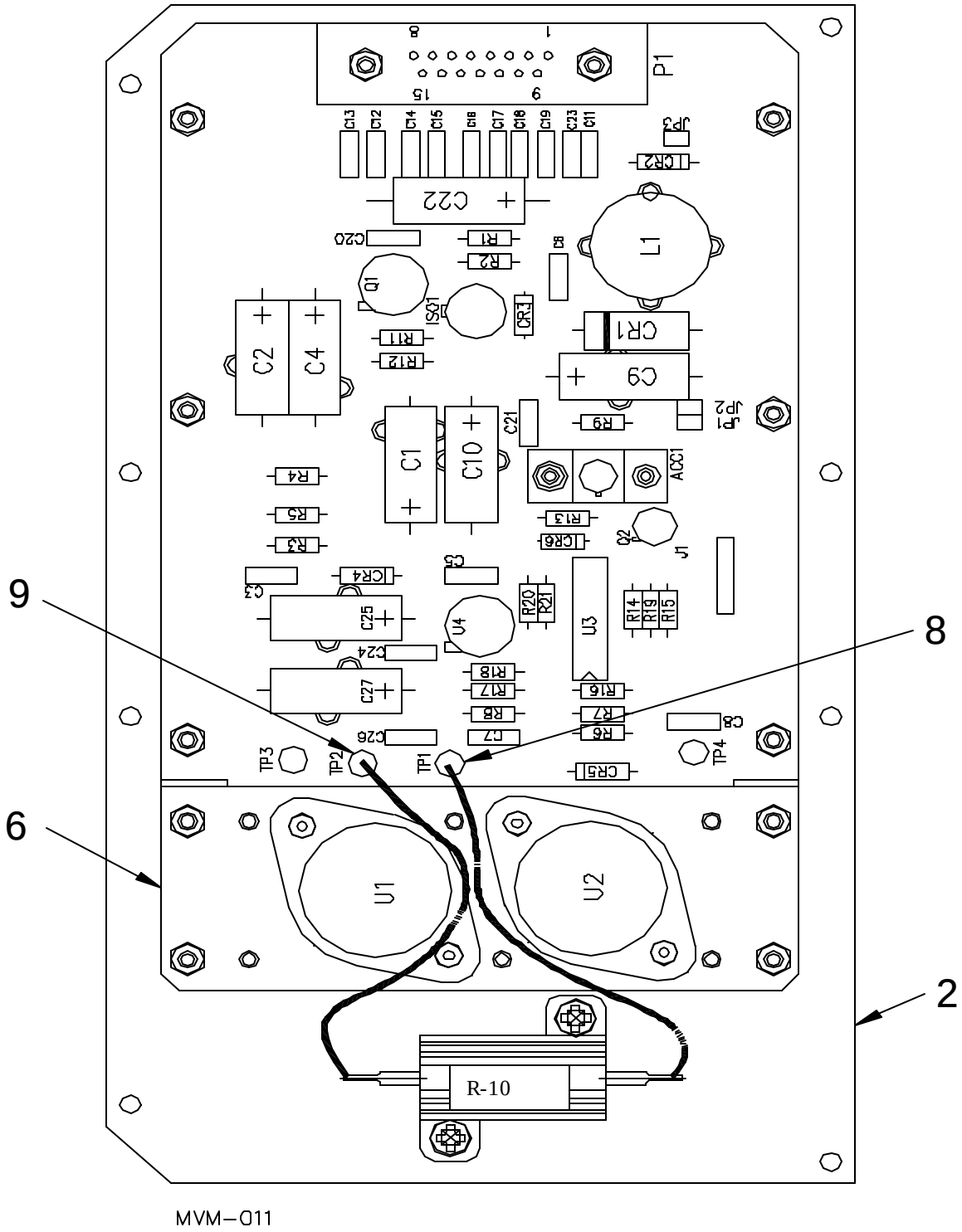

Figure 3-42. Linear Power Supply CCA, P/N AY6706619-0, Component Locations

3.9.9 Inspection

Inspect Linear Power Supply Module as follows:

a. Inspect all components for security of attachment.
b. Inspect all parts for damage, wear and deterioration.
c. Inspect all parts for nicks, cracks, scoring, dents, scratches or corrosion.
d. Inspect all threaded parts for crossed, stripped or otherwise damaged threads.
e. Inspect all electronic parts for indication of overheating, cracked bodies, loose terminals, broken leads and other indications of damage of deterioration.
f. Inspect all wiring for bent or broken leads, for cracked, frayed, deteriorated worn, overheated or burned insulation and security of attachment. Check lacing for security of attachment.
g. Inspect wire bundles. Wire bundles must be securely held in place and not pinched or crimped.
h. Inspect connectors for broken, bent or loose pins and secure mounting.
i. In case of physical damage, replace or repair damaged part.

3.9.10 Functional Test

The functional test setup for the Linear Power Supply is as shown in Figure 3-43. Figures 3-44 and 3-45 are detailed illustrations of the Linear Power Supply tester and its schematic.

a. On test set, set switch S1 to PS. On DMM, set function to DC volts.
b. Turn on power supply.
c. Set power supply output voltage to 29±1.0 VDC. Measure output voltage with DMM and ensure voltage is 29±1.0 VDC.
d. On test set, verify ANT S.D. ON/OFF switch is set to OFF.
e. On test set, set switch S1 to DOPP.
f. Verify voltage measured on DMM is +18±0.9 VDC.
g. Set scope for AC mode. Measure ripple voltage. Verify ripple voltage is less than 40 mVp-p.
h. On test set, set switch S1 to ANT POWER.
i. Verify voltage measured on DMM is 0±0.1 VDC.
j. On test set, set ANT S.D. ON/OFF switch is set to ON.
k. Verify voltage measured on DMM is +V±0.3 VDC (where V is the voltage marked on the power supply). If out of tolerance, go to para. 3.9.12.
l. With scope in AC mode, measure ripple voltage. Verify ripple voltage is less than 40 mVp-p.
m. On test set, set ANT S.D. ON/OFF switch to OFF.
n. Turn off power supply.
o. Measure resistance between TP3 and TP4 on test set. Verify resistance measures 0 ±0.5 Ω.
p. Measure resistance between TP3 and PS- on test set. Verify resistance measures 0 ±0.5 Ω.
q. End of test.

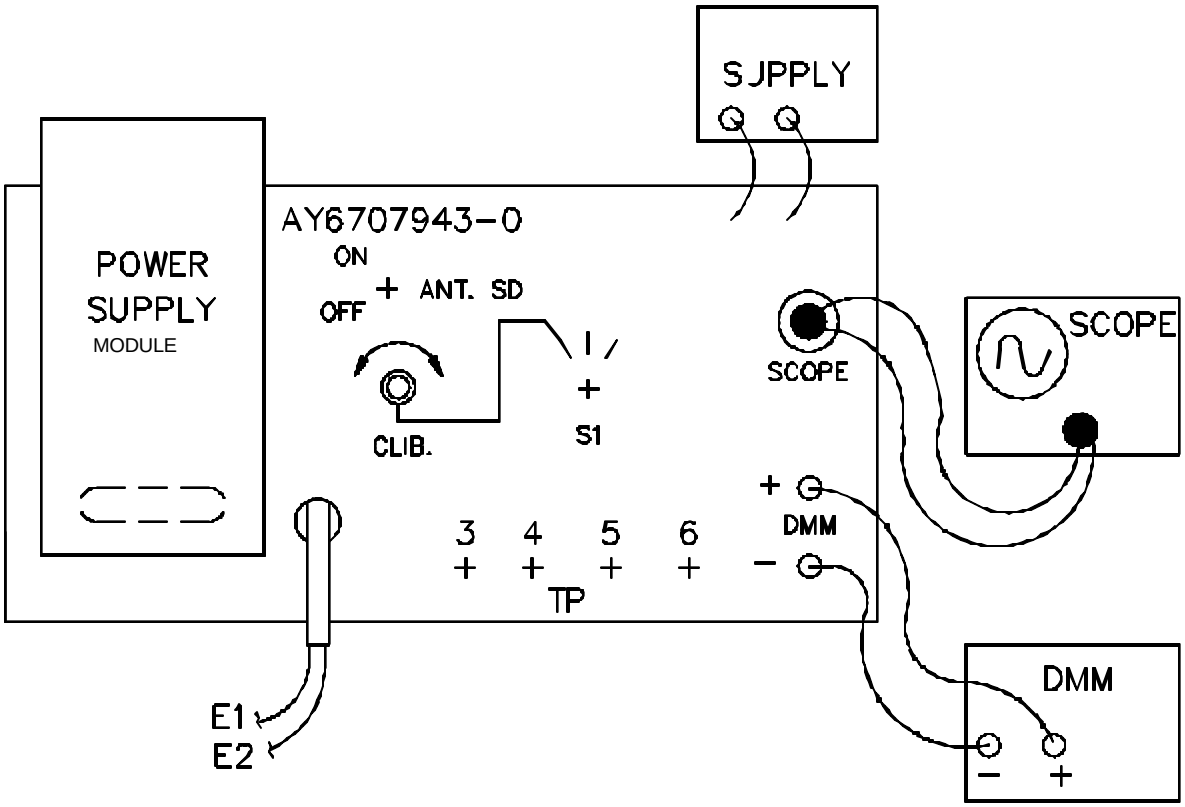

Figure 3-43. Linear Power Supply Module Test Set-up

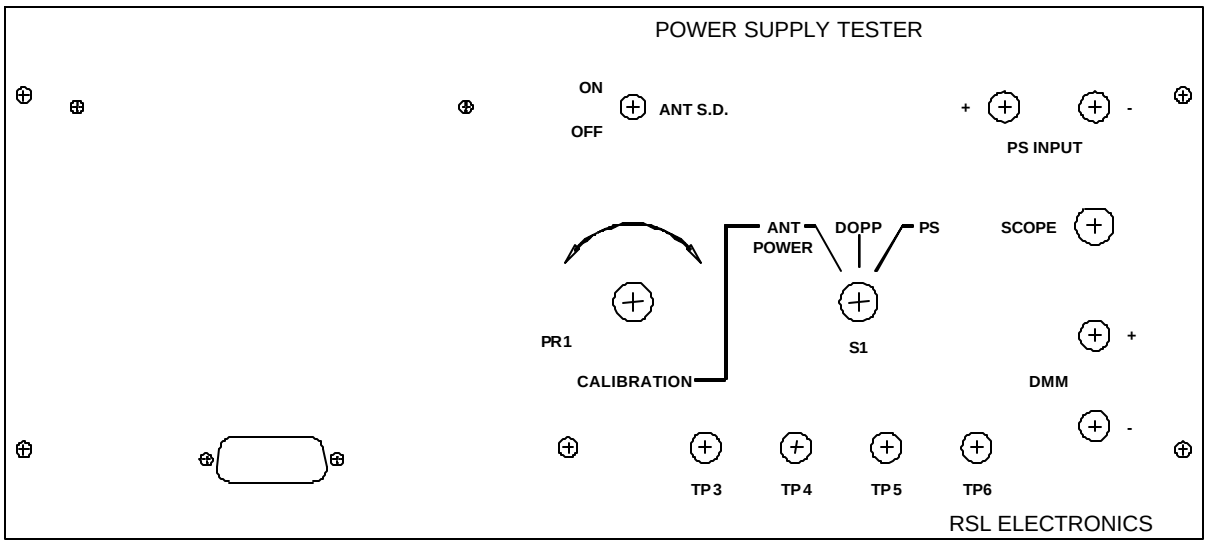

Figure 3-44. Linear Power Supply Module Tester, P/N AY6707943-0

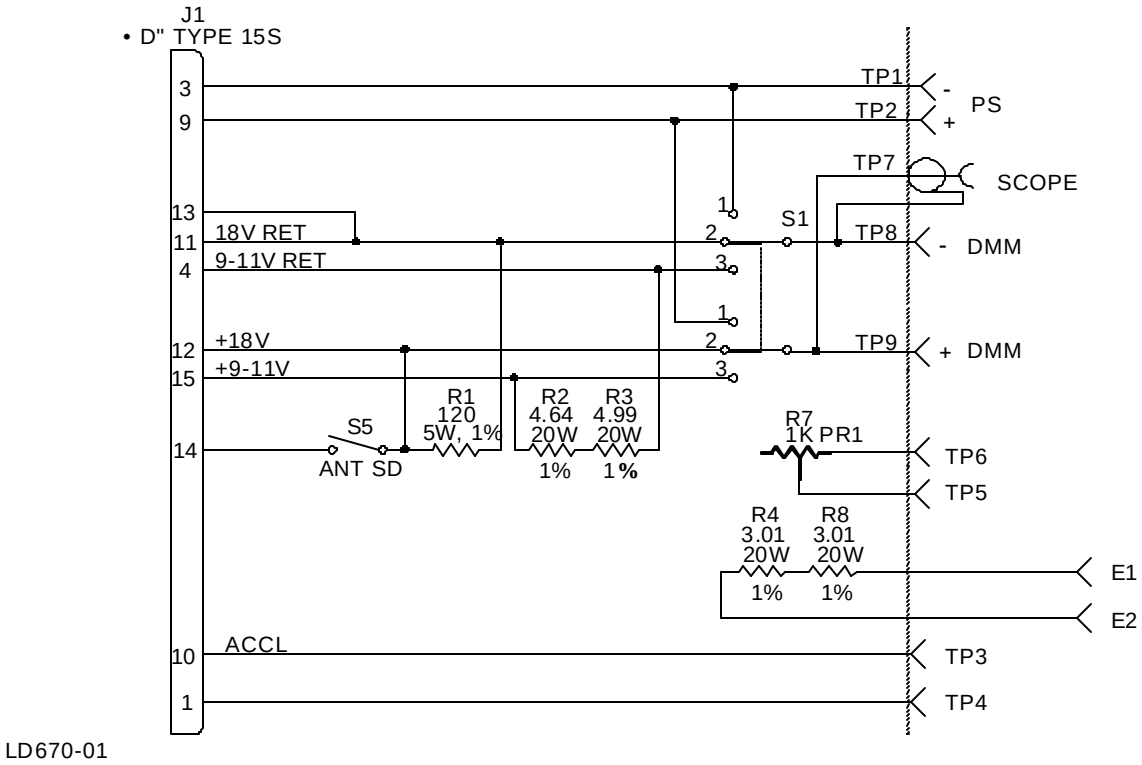

Figure 3-45. Linear Power Supply Module Tester Schematic

3.9.11 Troubleshooting

Troubleshooting procedures for the Linear Power Supply Module are provided in the paragraphs below. Refer to Figure 3-46 for additional troubleshooting information. Refer to FO-5 for schematic diagram.

3.9.11.1 Failure On All Voltage

a. Check voltage at TP1. Verify voltage is 30±0.5 VDC.

b. If voltage is out of range or not present, verify external power supply voltage is correct.

c. Replace CR2 and recheck voltage at TP1. If voltage still incorrect, replace L1.

3.9.11.2 18 Volts Output Failure

a. Replace U2.

b. Inspect and replace R6, R7, and R8.

3.9.11.3 10 Volts Output Failure

a. Verify ANT S.D. is in the OFF position. Check voltage at TP3 on CCA. Verify voltage is V ±0.5 VDC, where V is required Voltage for the Transceiver.

b. If there is no voltage at TP3 on CCA, replace U1.

c. Turn ANT S.D. switch on test fixture to ON.

d. If there is no output voltage at DMM plugs on tester, replace ISO1.

e. If there is no output voltage on DMM plugs on tester, replace Q1.

f. If the problem has been resolved, and/or output voltage is out of limit, disconnect R4 and perform Output Power Adjustment Procedure IAW para. 3.9.12.

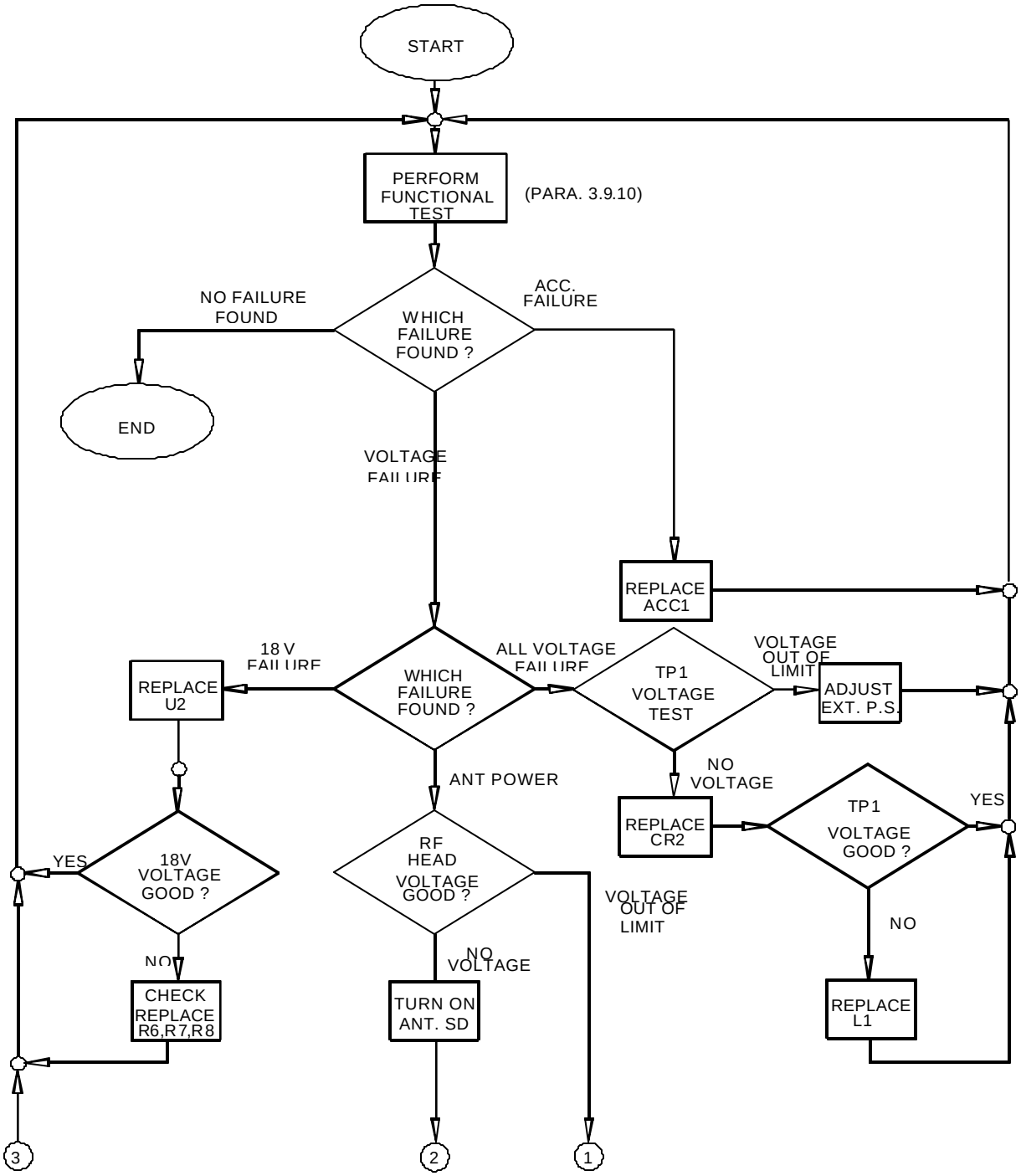

Figure 3-46. Linear Power Supply Module, P/N AY6706620-0, Troubleshooting Flowchart (Sheet 1 of 2)

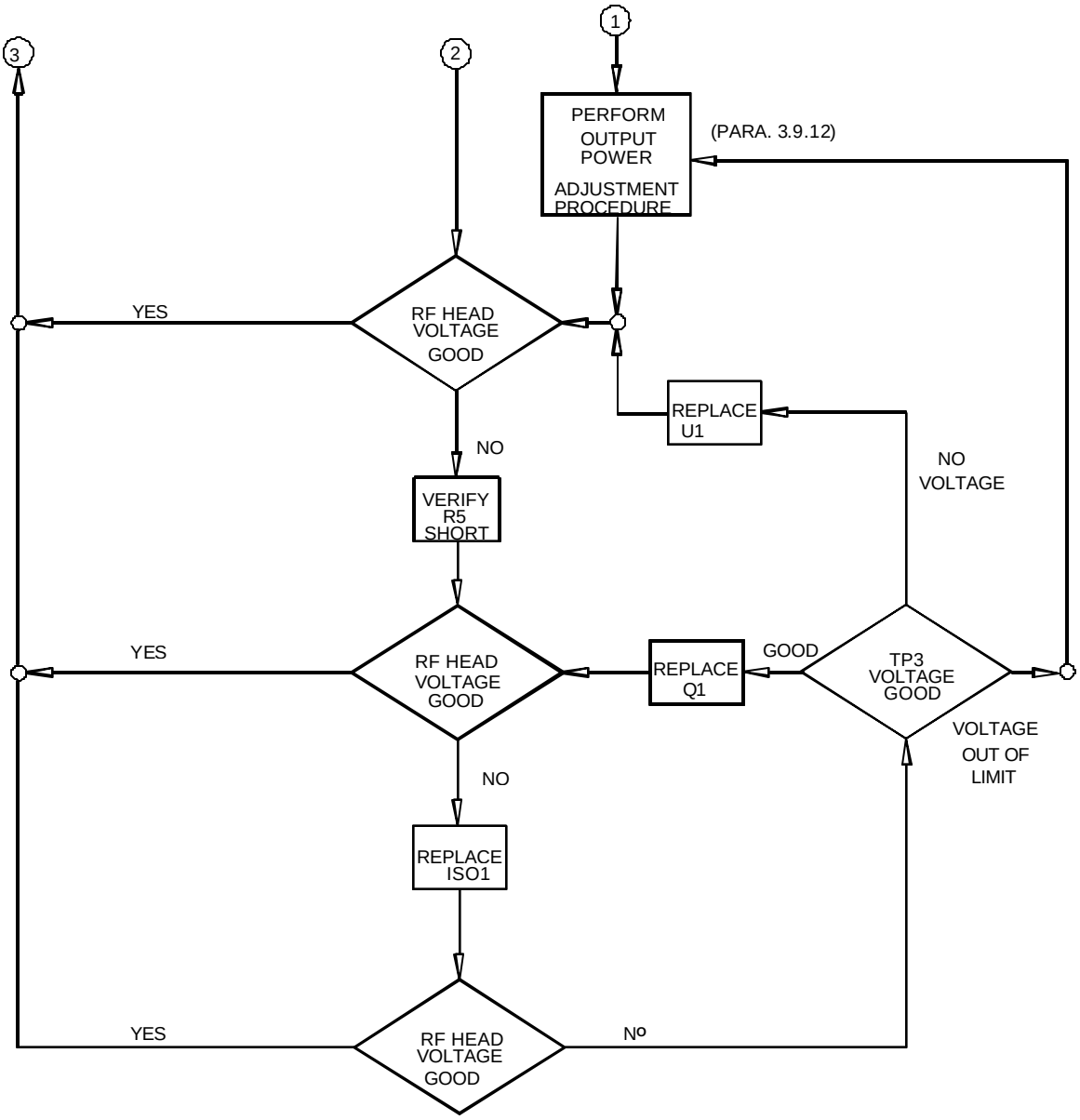

Figure 3-46. Linear Power Supply Module, P/N AY6706620-0, Troubleshooting Flowchart (Sheet 2 of 2)

3.9.11.4 Accelerometer Continuity

If resistance between TP3 and TP4 on test set is still infinite, replace accelerometer.

3.9.12 Output Power Adjustment Procedure

The purpose of this procedure is to adjust the output voltage to the transceiver. This procedure is performed whenever the power supply is matched with an RF module or if ANT POWER is out of tolerance.

a. On test set, set switch S1 to P.S.

b. Turn on power supply.

c. Set power supply to 29±1.0 VDC. Verify voltage measured on DMM is 29±1.0 VDC.

d. Connect clips E1 and E2 of test set to TP1 and TP2 in unit under test.

e. Connect points TP5 and TP6 of test set to turret terminals of R4 on CCA.

f. On test set, set switch S1 to ANT POWER.

g. On test set, turn off ANT S.D.

h. Verify voltage measured on DMM is 0±0.1 VDC.

i. On test set, turn on ANT S.D.

j. Adjust voltage measured on DMM by PR1 to match the voltage stamped on transceiver to within ±0.05 VDC.

k. On test set, turn off ANT S.D.

l. Turn off power supply.

m. Disconnect test set from CCA.

n. Measure resistance between TP5 and TP6 in test set and record results.

o. Choose resistor types RNC5 1% at least with nearest resistance to measured resistance RM.

p. Solder chosen resistor R4 between turrent terminals on CCA.

q. Connect DMM to DMM+ and DMM- to measure voltage.
Repeat procedure 3.9.10, steps a., b., c., and h.

r. Turn on ANT S.D. switch on test set.

s. Verify that voltage measurement on DMM is within ±0.3 VDC of the voltage stamped on transceiver.

t. Turn off ANT S.D.

u. Turn off power supply.

v. End of procedure.

SECTION X. DOPPLER SIMULATOR, P/N AY6706690-0

SECTION CONTENTS

		Page
3.10	DOPPLER SIMULATOR, P/N AY6706690-0.	3-120
3.10.1	GENERAL.	3-120
3.10.2	TEST EQUIPMENT AND SPECIAL TOOLS REQUIRED.	3-120
3.10.3	MATERIALS REQUIRED.	3-121
3.10.4	GENERAL REPAIR REQUIREMENTS.	3-121
3.10.5	DISASSEMBLY.	3-122
3.10.6	INSPECTION.	3-123
3.10.7	ASSEMBLY.	3-128
3.10.8	FUNCTIONAL TEST.	3-128
3.10.9	TROUBLESHOOTING.	3-132
3.10.10	ADJUSTMENT PROCEDURE.	3-135

3.10 DOPPLER SIMULATOR, P/N AY6706690-0

3.10.1 General

The following paragraphs provide repair procedures and maintenance information for the Doppler Simulator. Source, maintenance, and recoverability codes are listed below:

U.S. Army	PAOZZ
U.S. Marine Corps	PAOFF

3.10.2 Test Equipment and Special Tools Required

Test equipment and special tool requirements are listed in Table 3-30. Unless otherwise specified, the test equipment and special tools listed below will be used for testing the Doppler Simulator. Each commercially available item of test equipment can be replaced by equipment equivalent to that listed.

Table 3-30. Test Equipment and Special Tools Required

Nomenclature	Part/Spec. No.	Appendix C Figure 27 Item No.
Coaxial Cables, BNC, Male-To-Male, 50 Ω	Local Manufacture	N/A
Digital Multimeter	Fluke, Model 77-2	5
Electronic Equipment Tool Kit	PPL863	11
Magnifying Glass, 4X	Edmund Scientific, Model G36225	19
Oscilloscope	Hewlett Packard, Model 1070B	44
Power Supply, DC (0-40 V, 1 A)	Lambda, LLS-5040	35
Test Set	RSL, P/N AY6708048-0	39
ESD Work Station Kit	M87893-02	13

3.10.3 Materials Required

Repair materials and other consumable item requirements are listed in Table 3-31.

Table 3-31. Materials Required

Nomenclature	Part/Spec. No.	Appendix F Item No.
Adhesive	MIL-A-46146, Type III	19
Battery	Energizer, 1.5 Volt, D-size	5
Insulation Compound	MILI46058TYPE1B31	9
Primer	747-55	17
Sealant	83-31	16
Solder	SN63WRMAP3	23
Antistatic Bag	3271576	33

3.10.4 General Repair Requirements

Refer to Figures 3-47 and 3-48. The following general requirements apply to the repair of the Doppler Simulator.

CAUTION

The Doppler Simulator contains components subject to damage by electrostatic discharge. Use approved grounding procedures before touching or inserting CCA.

CAUTION

Damage will occur to the Doppler Simulator if batteries are placed in Simulator backward.

a. Bond components to board with MIL-A-46146, Type III, adhesive.

b. Component shall be mounted flush to board. No angle is allowed.

c. Use only SN63WRMAP3 tin/lead solder or approved equivalent.

d. Apply uniform coating of MILI46058TYPE1B31 insulation compound, 0.003 ±0.002 in. thick, where compound has been removed during CCA repairs.

e. Square pad designates Pin 1 of integrated circuit, cathode of diode, positive lead of polarized capacitors.

3.10.5 Disassembly

Refer to Figure 3-47. Disassemble Doppler Simulator as follows:

CAUTION

The Doppler Simulator contains assemblies subject to damage by electrostatic discharge. Use approved grounding procedures before touching, removing or inserting circuit card assemblies and components.

a. Unscrew back cover (3) from Doppler Simulator.

b. Remove two batteries (7) from back cover.

c. Remove lens/cover housing (1).

d. Loosen four hex socket captive screws (4) on Horn (5).

e. Pull modulator subassembly (2) out of electronic housing.

f. Disconnect red wire from TP3 on Doppler Simulator CCA.

g. Disconnect brown wire from TP1 on Doppler Simulator CCA.

h. Loosen two captive screws from modulator subassembly.

i. Separate Doppler Simulator CCA from modulator subassembly. Place Doppler Simulator CCA in antistatic bag.

3.10.6 Inspection

Refer to Figures 3-47 and 3-48. Inspect Doppler Simulator as follows:

a. Inspect all components for security of attachment.

b. Inspect all parts for damage, wear, and deterioration.

c. Inspect all parts for nicks, cracks, scoring, dents, scratches, corrosion and broken runs.

d. Inspect all electronic parts for indication of overheating, cracked bodies, loose terminals, broken leads, and other indications of damage or deterioration.

e. Visually inspect RF pin switch diode chip (2) (mounted inside horn) with magnifying glass. Check that gold ribbon (1) is not bent and is properly bonded to diode and PWB (4). Refer to Figure 3-48.

f. In case of physical damage, replace or repair damaged part.

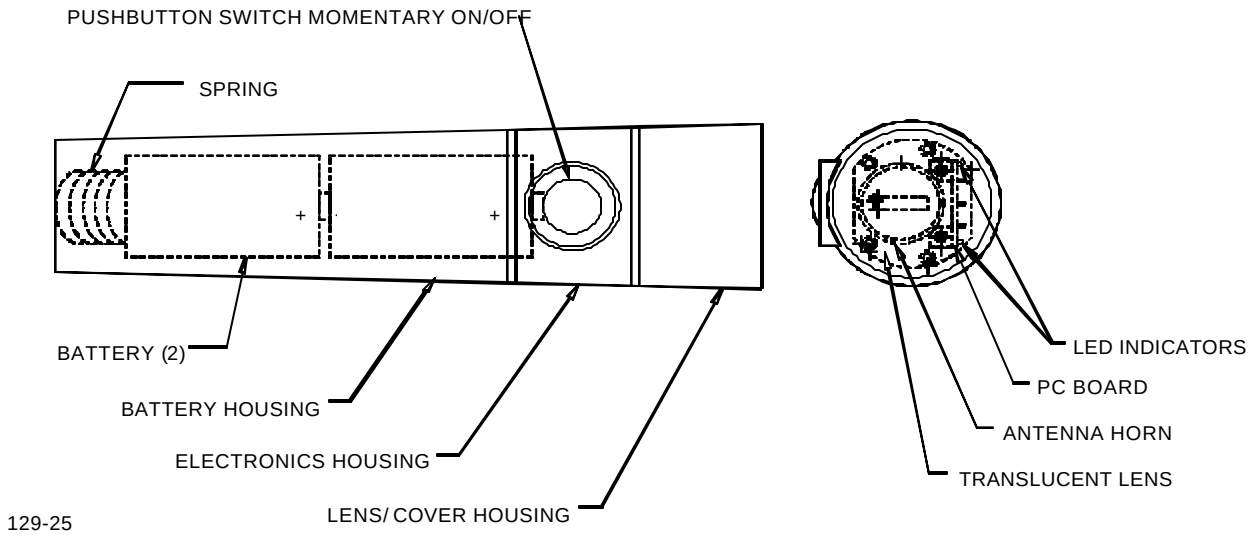

Figure 3-47. Doppler Simulator, P/N AY6706690-0, Component Locations (Sheet 1 of 3)

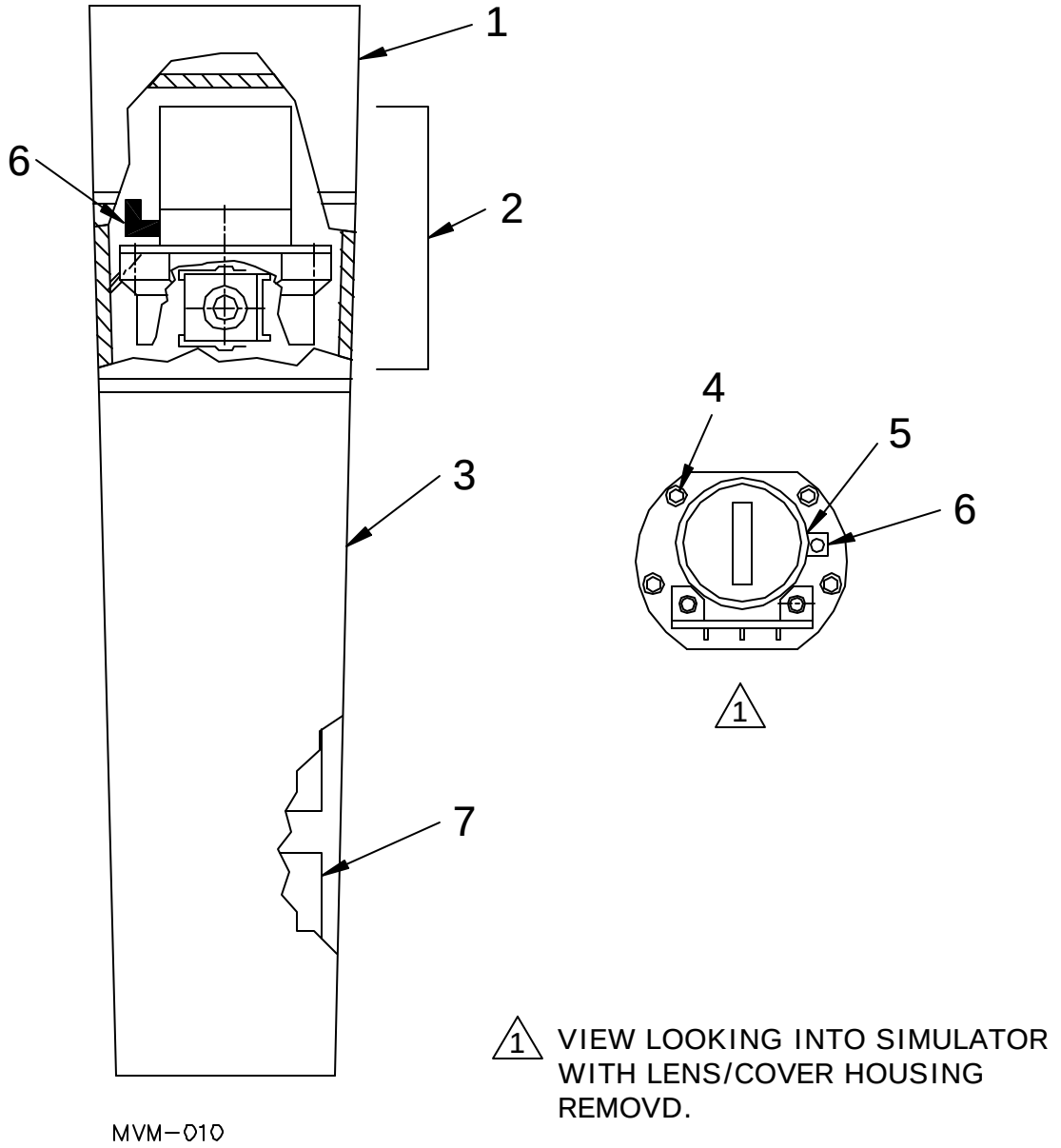

Figure 3-47. Doppler Simulator, P/N AY6706690-0, Component Locations (Sheet 2 of 3)

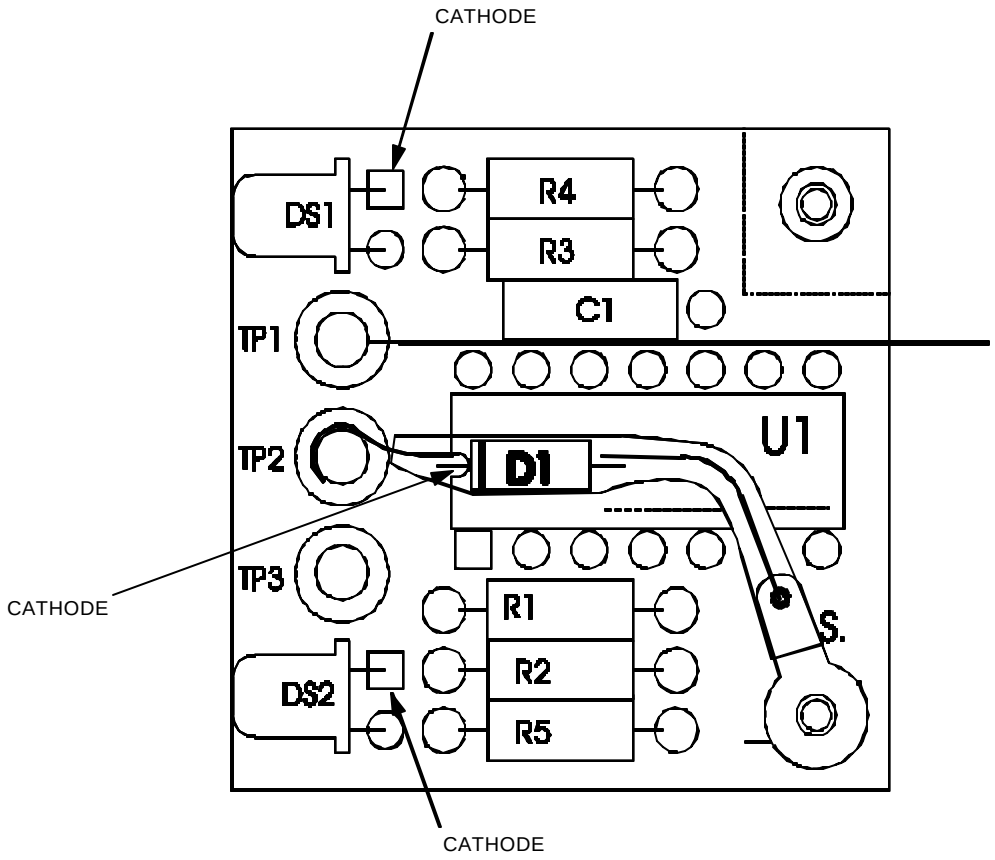

Figure 3-47. Doppler Simulator, P/N AY6706690-0, Component Locations (Sheet 3 of 3)

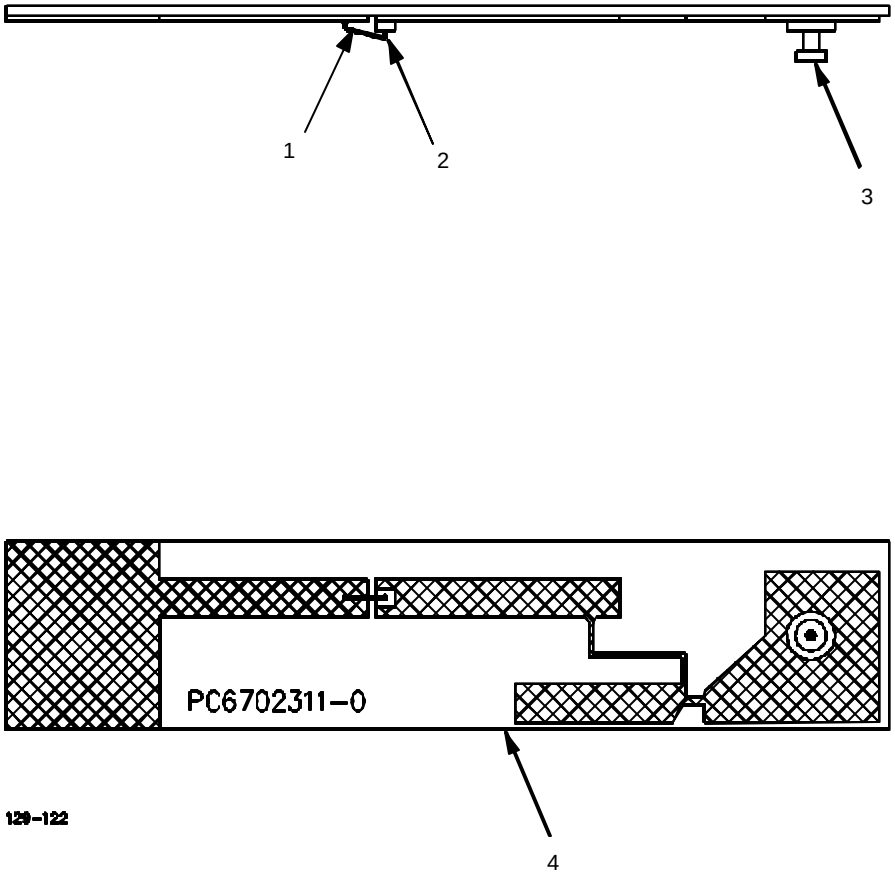

1. GOLD RIBBON
2. RF DIODE
3. TERMINAL
4. PRINTED WIRING BOARD

Figure 3-48. Doppler Simulator, P/N AY6706690-0, RF Diode Location

3.10.7 Assembly

Refer to Figure 3-47. Assemble Doppler Simulator as follows:

CAUTION

The Doppler Simulator contains assemblies subject to damage by electrostatic discharge. Use approved grounding procedures before touching, removing or inserting circuit card assemblies and components.

a. Connect Doppler Simulator CCA to modulator subassembly (2).

b. Fasten two captive screws to modulator subassy.

c. Reconnect brown wire to TP1 on Doppler Simulator CCA.

d. Reconnect red wire to TP3 on Doppler Simulator CCA.

e. Insert modulator subassembly (2) into electronic housing.

f. Fasten four hex socket head screws (4).

g. Insert two batteries (7) into back cover.

h. Screw back cover (3) to Doppler Simulator.

i. Install lens/cover housing (1).

3.10.8 Functional Test

The functional test setup for the Doppler Simulator is as shown in Figure 3-49. Figure 3-50 is the schematic of the Doppler Simulator Tester. Perform functional test of Doppler Simulator as follows:

3.10.8.1 RF Diode Test

Refer to Figure 3-47.

a. Set DMM to diode mode (Figure 3-49).

b. Connect DMM positive lead to antenna horn (5) of Doppler simulator.

c. Connect negative lead to RF diode terminal (6). Verify on DMM resistance of 0.64±0.2 KΩ. Replace RF CCA (4) if necessary by loosening two captive screws from plate.

d. Connect negative lead to antenna horn (5). Connect positive lead to RF diode terminal (6). Verify on DMM high impedance. If not, replace RF CCA as described above.

3.10.8.2 Test Set-up

Refer to Figure 3-49.

a. Connect power supply to Doppler Simulator Tester. Observe correct polarity.

b. Set power supply to minimum voltage.

c. Connect DMM to test set. Observe correct polarity.

d. Connect scope to test set.

e. Set DMM to voltage mode.

f. Set rotary switch to position 1.

g. Turn on power supply.

h. Adjust power supply to 3±0.15 VDC. Turn off power supply.

i. Connect Doppler Simulator CCA to test set as follows:

   1. TP1 on CCA to TP1 on test set
   2. TP2 on CCA to TP2 on test set
   3. TP3 on CCA to TP3 on test set

j. Set rotary switch to position 2 on Doppler Simulator Tester to position 2.

NOTE

The purpose of setting DMM to current mode is to allow current supply to the Doppler Simulator CCA through the low resistance of the DMM at current mode. This setting of DMM is equivalent to disconnecting the DMM and connecting shorting wire instead.

k. Set DMM to current mode.

l. Set DMM to RESISTANCE mode.

m. Turn on power supply.

n. Set DMM to RESISTANCE mode.

o. Verify both LEDs are illuminated (DS1 and DS2).

p. Verify on scope square wave with the following parameters:

   1. High level 1±0.2 V
   2. Low level 0-0.5 V
   3. Cycle time 20±1 µsec

q. End of test.

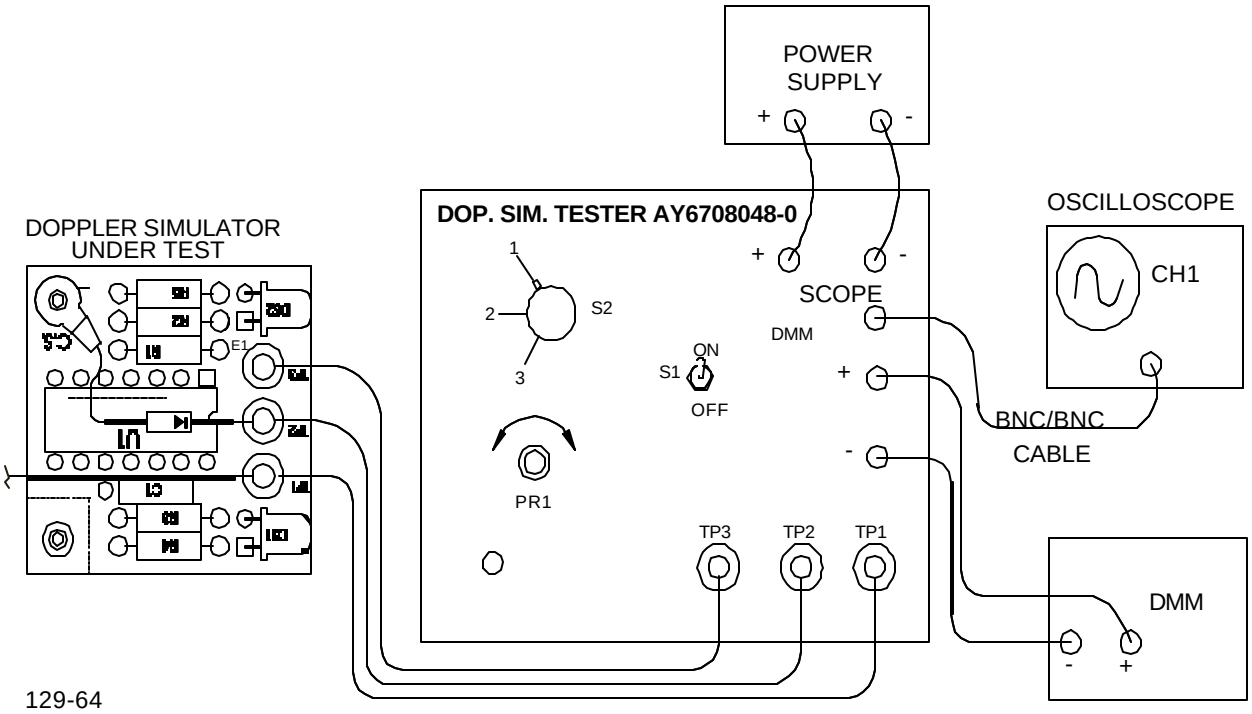

Figure 3-49. Doppler Simulator Test Set-up

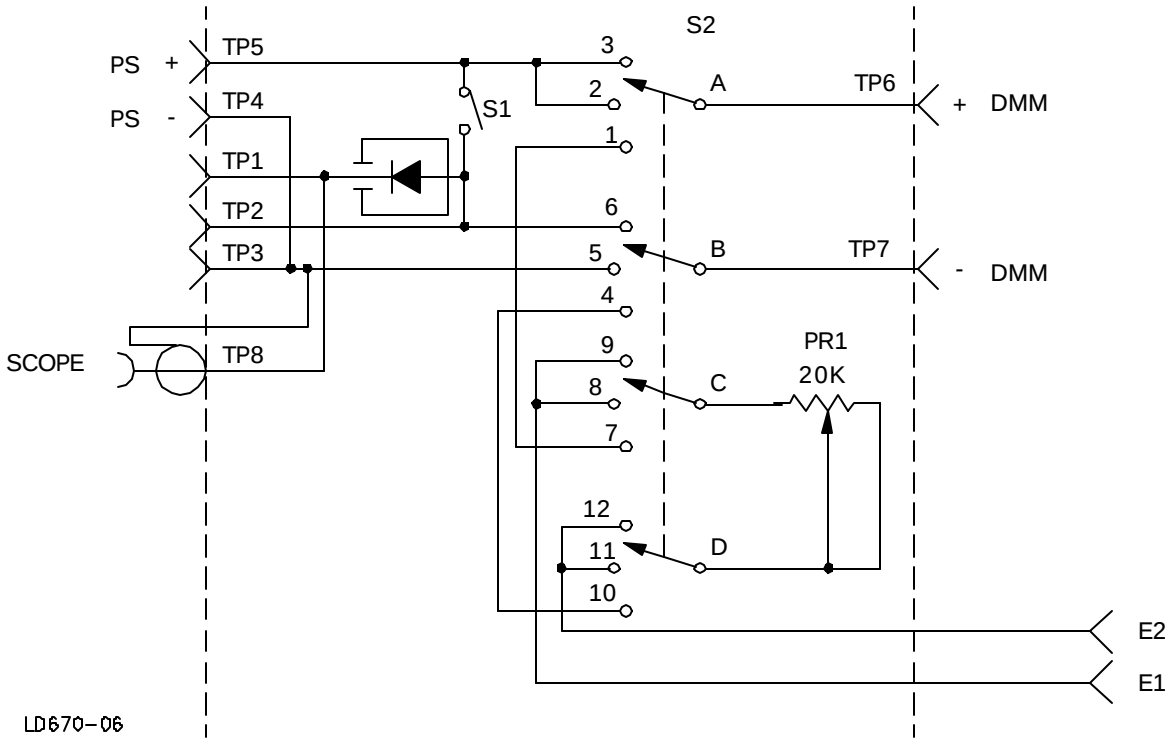

Figure 3-49a. Doppler Simulator Tester Schematic

3.10.9 Troubleshooting

Refer to Figures 3-50 and 3-51. Troubleshoot Doppler Simulator as follows:

3.10.9.1 One LED (DS1 or DS2) does not illuminate.

a. Adjust power supply to 1±0.1 VDC.
b. Connect positive lead to DS1 anode.
c. Connect negative lead to DS1 cathode.
d. Verify DS1 is illuminated. Replace if not illuminated.
e. Connect positive lead to DS2 anode.
f. Connect negative lead to DS2 cathode.
g. Verify DS2 is illuminated. Replace if not illuminated.
h. Replace U1 if required.
i. Repeat Functional Test (para. 3.10.8).

3.10.9.2 High or low level of square wave are out of limits.

a. Replace U1.
b. Repeat Functional Test (para. 3.10.8).

3.10.9.3 Cycle time of square wave is out of limits.

a. Remove R2. Perform adjustment procedure (para. 3.10.10).
b. Repeat Functional Test (para. 3.10.8).

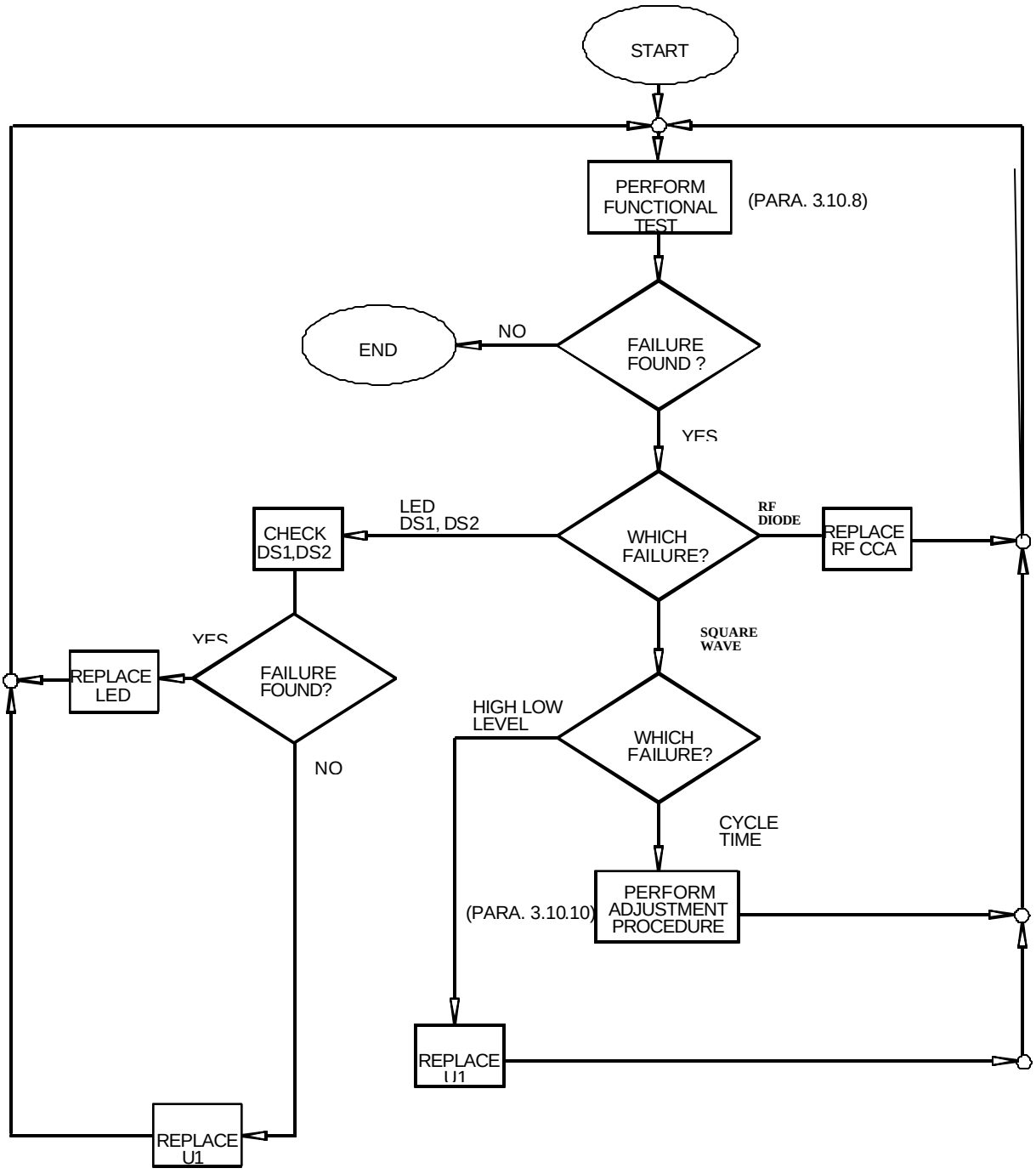

Figure 3-50. Doppler Simulator, P/N AY6706690-0, Troubleshooting Flowchart

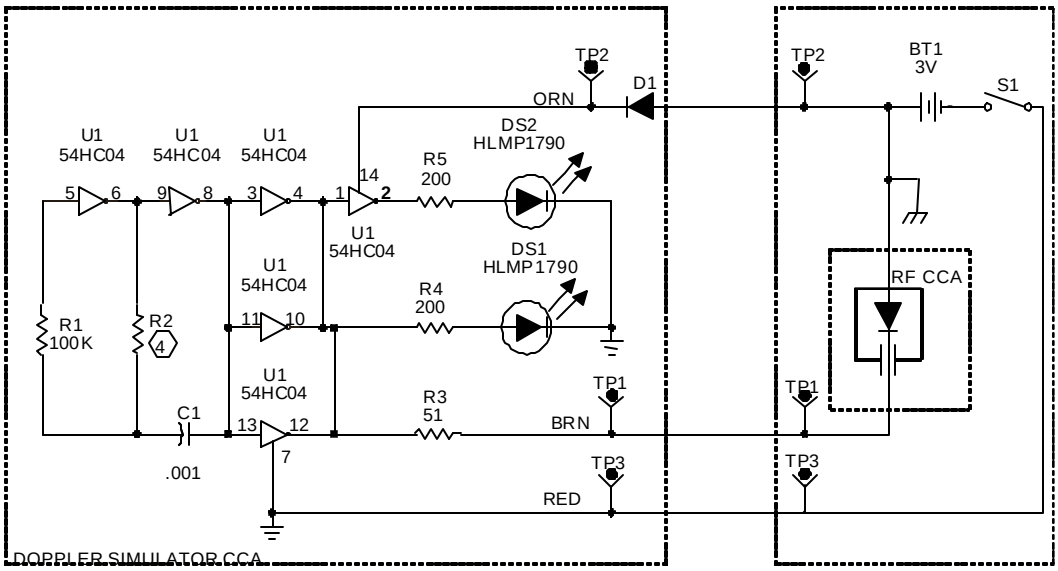

*NOTE: R2 IS A SELECTED RESISTOR WITH THE RANGE OF 3.9 TO 9 KW, 2%.

Figure 3-51. Doppler Simulator, P/N AY6706690-0, Schematic Diagram

3.10.10 Adjustment Procedure

Refer to Figure 3-49.

a. Set rotary switch to position 1.

b. Set DMM to voltage mode.

c. Adjust power supply output to 3±0.1 VDC.

d. Set rotary switch to position 2.

NOTE

The purpose of setting DMM to current mode is to allow current supply to the Doppler Simulator CCA through the low resistance of the DMM at current mode. This setting of DMM is equivalent to disconnecting the DMM and connecting shorting wire instead.

e. Set DMM to current mode.

f. Measure square wave with scope.

g. Adjust square wave to 20±1 μsec.

h. Set rotary switch to position 3.

i. Set DMM to resistance mode.

j. Measure resistance of PR1 and record as RM. Choose resistor R2, with resistance value as close as possible to RM, type RLR05C, 2%, with the range of 3.9 to 9 KΩ.

k. Disconnect E1 and E2 from Doppler Simulator under test.

l. Disconnect Doppler Simulator CCA from test equipment.

m. Install by soldering chosen resistor R2 on the CCA.

n. Set rotary switch to position 2.

o. Set DMM to current mode.

p. Verify on scope square wave with cycle time of 20±1 μsec.

q. End of procedure.

SECTION XI. BRACKET ASSEMBLY, P/N 12922098

SECTION CONTENTS

		Page
3.11	BRACKET ASSEMBLY, P/N 12922098.	3-136
3.11.1	GENERAL.	3-136
3.11.2	SPECIAL TOOLS REQUIRED.	3-136
3.11.3	MATERIALS REQUIRED.	3-137
3.11.4	INSPECTION.	3-137
3.11.5	REMOVAL.	3-137
3.11.6	INSTALLATION.	3-137
3.11.7	DISASSEMBLY.	3-137
3.11.8	ASSEMBLY.	3-138

3.11 BRACKET ASSEMBLY, P/N 12922098

3.11.1 General

The following paragraphs provide repair procedures and maintenance information for the Bracket Assembly, P/N 12922098. Source, maintenance, and recoverability codes are listed below:

U.S. Army	PAOFF
U.S. Marine Corps	PAOOO

3.11.2 Special Tools Required

Special tool requirements are listed in Table 3-32. Unless otherwise specified, the special tools listed below will be used for repairing the Bracket Assembly. Each commercially available tool can be replaced by a tool equivalent to that listed.

Table 3-32. Special Tools Required

Nomenclature	Part/Spec. No.	Appendix C Figure 27 Item No.
Torque Wrench	TS30	6

3.11.3 Materials Required

Repair materials and other consumable item requirements are listed in Table 3-33.

Table 3-33. Materials Required

Nomenclature	Part/Spec. No.	Appendix F Item No.
Cotter Pin	MS24665-302	15
Lock washer	MS35338-137	26

3.11.4 Inspection

Inspect Bracket Assembly as follows:

a. Inspect all components for security of attachment.
b. Inspect all parts for damage, wear, and deterioration.
c. Inspect all parts for nicks, scoring, dents, scratches, and broken welds.
d. Inspect all threaded parts for crossed, stripped, or otherwise damaged threads.
e. Inspect threaded inserts and nut plates for security of attachment.
f. Inspect painted surfaces for cracked, chipped, blistered, or deteriorated paint film.

3.11.5 Removal

Refer to Figure 3-7A. Remove Bracket Assy from Transceiver Assy as follows:

a. Remove four hex socket screw (1) and four lock washers (2).
b. Remove Bracket Assy (3) from Transceiver (4).

3.11.6 Installation

Refer to Figure 3-7A. Install Bracket Assy to Transceiver Assy as follows:

a. Attach Bracket Assy (3) and Transceiver (4).
b. Install four hex socket screw (1) and four lock washers (2).

3.11.7 Disassembly

Refer to Figure 3-52. Disassemble Bracket Assembly as follows:

a. Remove four screws (8), four lock washers (9), and four flat washers (10) on each of the four resilient mounts (7) from machined bracket (6). Discard lock washers (9).
b. Unscrew and remove externally relieved bolt (4) and round plain nut (5) from machined bracket (6).
c. Remove cotter pin (2) and straight pin (1) from machined handle (3). Discard cotter pin (2).
d. Remove machined handle (3) from externally relieved bolt (4).

3.11.8 Assembly

Refer to Figure 3-52. Assemble Bracket Assembly as follows:

a. Screw round plain nut (5) on externally relieved bolt (4).

b. Install machined handle (3) on externally relieved bolt (4).

c. Install straight pin (1) and new cotter pin (2) in machined handle (3).

d. Screw externally relieved bolt (4) into machined bracket (6).

NOTE

Steel lips on resilient mounts must face away from machined bracket (6) when installed.

e. Position four resilient mounts (7) on machined bracket (6) and secure each with four flat washers (10), four new lock washers (9), and four screws (8). Torque 16 machine screws (8) to 9.8-10.8 in. lb (1.11-1.22 N.m).

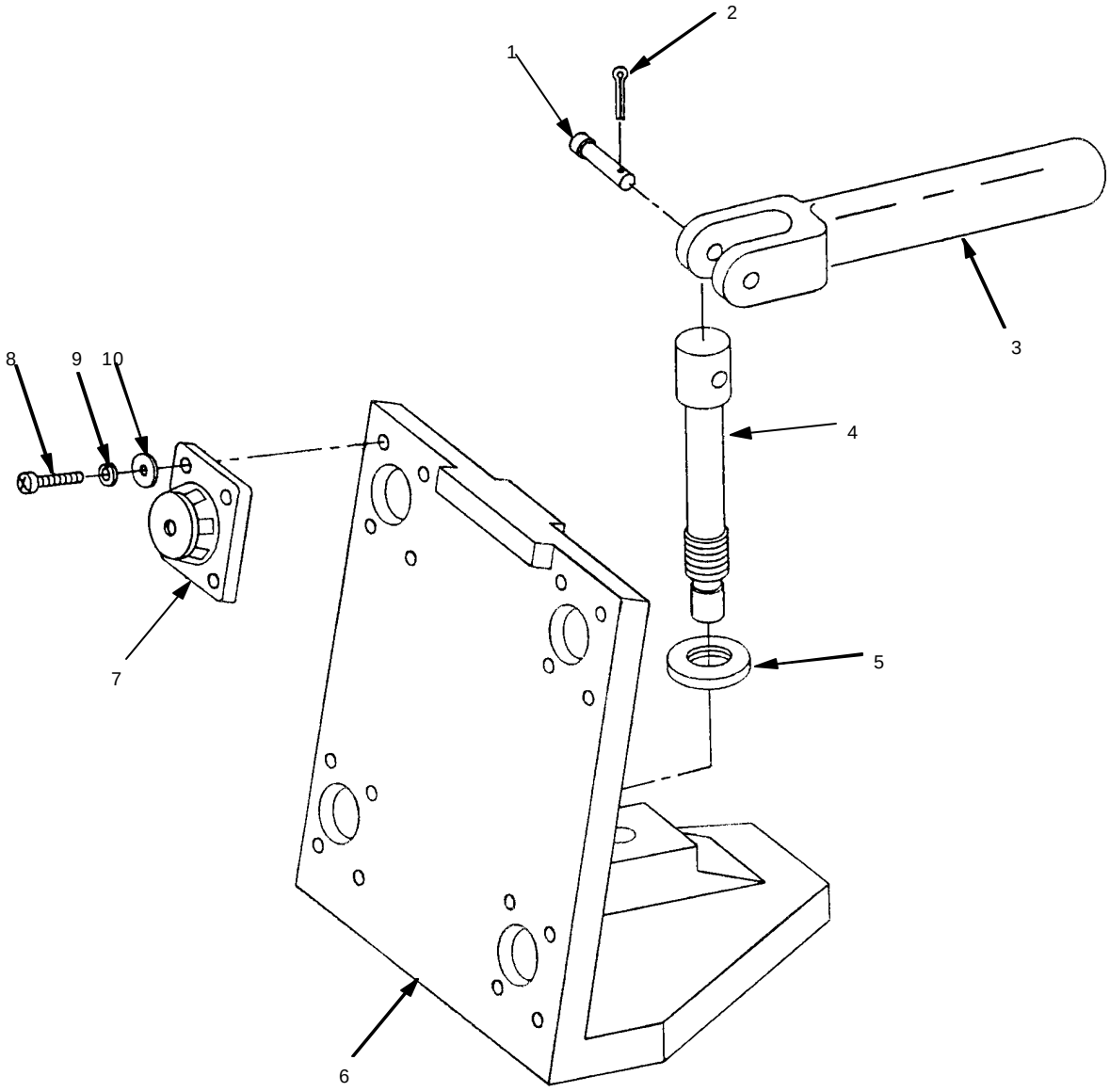

Figure 3-52. Bracket Assembly, P/N 12922098

SECTION XII. INTERCONNECTION CABLE (30-METER), P/N WA6706719-0

SECTION CONTENTS

		Page
3.12	INTERCONNECTION CABLE (30-METER), P/N WA6706719-0.	3-140
3.12.1	GENERAL.	3-140
3.12.2	TEST EQUIPMENT AND SPECIAL TOOLS REQUIRED.	3-140
3.12.3	MATERIALS REQUIRED.	3-141
3.12.4	GENERAL REPAIR REQUIREMENTS.	3-141
3.12.5	INSPECTION.	3-143
3.12.6	CONTINUITY TEST.	3-144

3.12 INTERCONNECTION CABLE (30-METER), P/N WA6706719-0

3.12.1 General

The following paragraphs provide repair procedures and maintenance information for the Interconnection Cable (30-Meter), P/N WA6706719-0. Source, maintenance, and recoverability codes are listed below:

U.S. Army	PAFFF
U.S. Marine Corps	PAFFF

3.12.2 Test Equipment and Special Tools Required

Test equipment and special tool requirements are listed in Table 3-34. Unless otherwise specified, the test equipment and special tools listed below will be used for testing the Interconnection Cable (30-Meter). Each commercially available item of test equipment can be replaced by equipment equivalent to that listed.

Table 3-34. Test Equipment and Special Tools Required

Nomenclature	Part/Spec. No.	Appendix C Figure 27 Item No.
Belt Wrench	Bertsch Co. No. 1, Model 31335	48
Crimping Tool	Daniels, Model M22520/1-01	7
Contact Positioner	Daniels, Model M22520/1-02	10
Digital Multimeter	Fluke, Model 77-2	5
Electronic Equipment Tool Kit	PPL863	11
Heat Gun	Master-Mite, Model 10008	4
Insertion/ExtractionTool	M81969/14-02	2

3.12.3 Materials Required

Repair materials and other consumable item requirements are listed in Table 3-35.

Table 3-35. Materials Required

Nomenclature	Part/Spec. No.	Appendix F Item No.
Adhesive	S1184	3
Adhesive	S1125	2
Label	43-143	10
Primer	747-55	17
Sealing Compound	MIL-S-22473, Grade AA	20

3.12.4 General Repair Requirements

Refer to Figure 3-53. Repair or replace cable connectors as follows:

NOTE

The following procedure applies to connector P1 or P2.

NOTE

Before replacing a connector, ensure that the replacement connector matches exactly the connector to be replaced.

a. Remove dust cap (1) from connector (2).

b. Remove screw (11), two washers (7/10), insulator (8), and nut (6) securing clamp (9) and dust cap assembly (12) to cable (5).

CAUTION

Using excess force when cutting boot may cause damage to wiring inside boot.

c. Using sharp knife, carefully cut boot (4) from end to end.

d. Pry boot (4) off of back shell (3) and cable (5).

e. Using connector pliers (soft jaw), remove back shell (3) from connector body (2) and slide away from connector (2).

f. Tag and label wires.

g. Using pin extraction tool, remove damaged pin and wire from connector body (2). Remove serviceable pins and wires also to facilitate installation of new boot (4).

h. Remove connector (2) from cable (5).

i. Move back shell (3) away from end of cable (5).

j. Cut wire as close as possible to end of damaged pin.

k. Strip insulation from wire as required ensuring that wire will seat properly in pin.

l. Using crimping tool, crimp pin to wire.

NOTE

Failure to place heat shrink boot and back shell on cable at this point and in correct sequence will require later removal of connector from cable to facilitate installation of boot and back shell.

m. Slide new boot (4) on cable (5).

n. Using insertion tool, insert pins into connector body (2).

NOTE

Failure to perform continuity check at this point may require complete disassembly of connector to correct improperly terminated connector pins.

o. Perform continuity test of cable IAW para. 3.12.6 and Table 3-36. If cable checks good, proceed to step p.

p. Using small wire brush, clean sealing compound residue from threads of connector body (2) and back shell (3).

q. Apply primer to threads of connector body (2) and back shell (3).

r. Apply sealing compound to threads of connector body (2) and back shell (3).

s. Screw back shell (3) on connector body (2) and torque to 3.7 ft lb (5 N.m).

t. Apply S1184 adhesive to inside of boot (4) to bond with cable shield and back shell (3).

u. Apply S1125 adhesive outside boot (4) for bonding to cable jacket (5) and back shell (3).

v. Place boot (4) on back shell (3).

w. Using heat gun, apply heat uniformly to boot (4) until boot shrinks to form secure seal around back shell (3) and cable (5).

x. Install clamp (9) and dust cap assembly (12) on cable with screw (11), two washers (7/10), insulator (8), and nut (6).

y. Install dust cap (1) on connector (2).

3.12.5 Inspection

Refer to Figure 3-53. Inspect Interconnection Cable (30-Meter) as follows:

a. Inspect all parts for damage, wear, and deterioration.

b. Inspect all wiring for bent or broken leads; cracked, frayed, deteriorated, worn, overheated, or burned insulation, and security of attachment.

c. Inspect connectors (2/13) for broken, bent, recessed, loose, damaged, or missing pins.

d. Inspect protective caps (1/14) for security of attachment.

3.12.6 Continuity Test

Refer to Table 3-36, Figures 3-54 and 3-55. Check wiring continuity as follows:

a. Set DMM to RESISTANCE mode.

b. Set DMM to OHMS X 1 mode.

c. Zero DMM to eliminate internal resistance of meter and resistance of test leads.

d. Measure continuity between connector plugs P1 and P2 in accordance with Table 3-36 Resistance should not exceed 0.5 ohm.

e. Set DMM to OHMS X 10K mode.

f. Measure resistance between each connector pin and adjacent pins. Resistance should be infinite.

g. If incorrect readings are noted in step d. or f., repair wire or connector.

Table 3-36. Interconnection Cable (30-Meter) Wiring

From Connector - Pin	To Connector - Pin
P1 - A	P2 - A
P1 - B	P2 - B
P1 - C	P2 - C
P1 - D	P2 - D
P1 - E	P2 - E
P1 - F	P2 - F
P1 - G	P2 - G
P1 - H	P2 - H
P1 - J	P2 - J
P1 - K	P2 - K

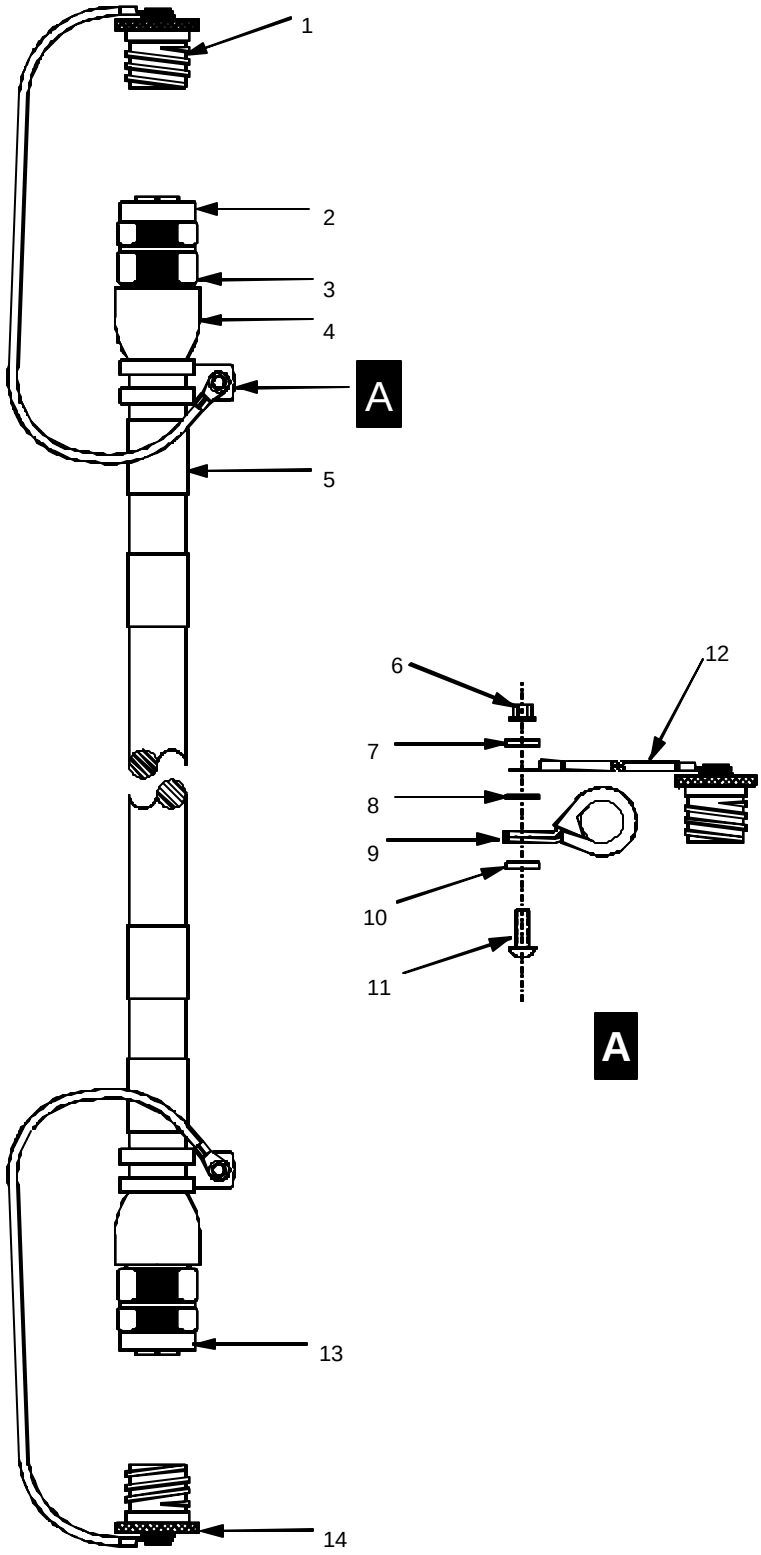

Figure 3-53. Interconnection Cable (30-Meter), P/N WA6706719-0

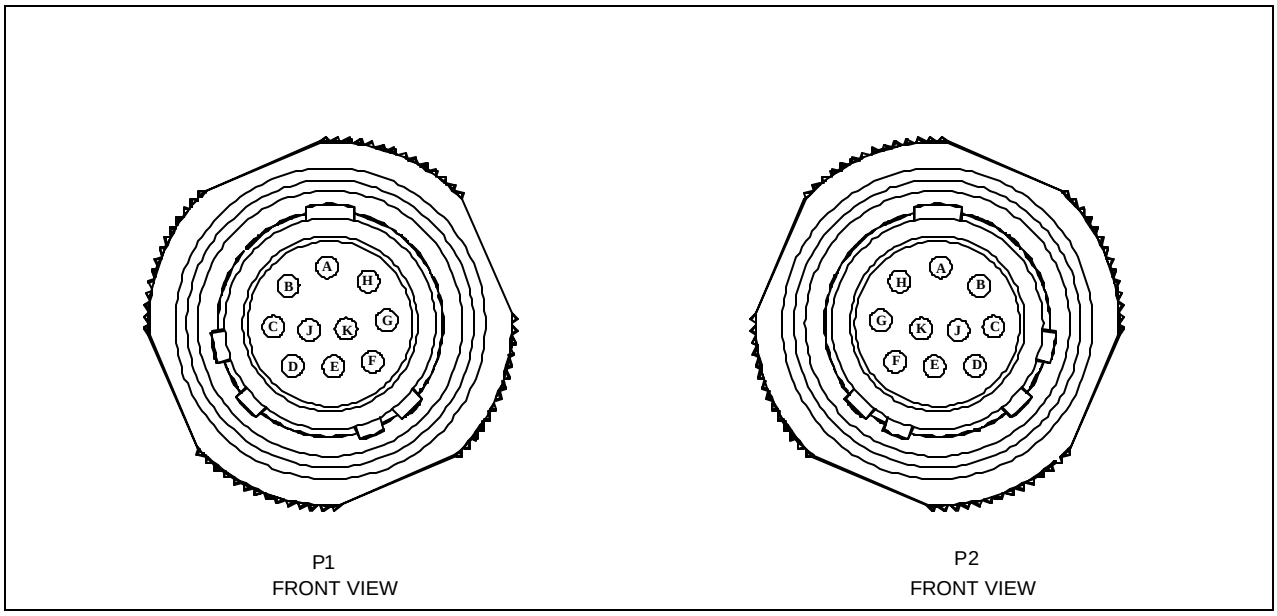

Figure 3-54. Interconnection Cable (30-Meter), P/N WA6706719-0, Connector Pin Locations

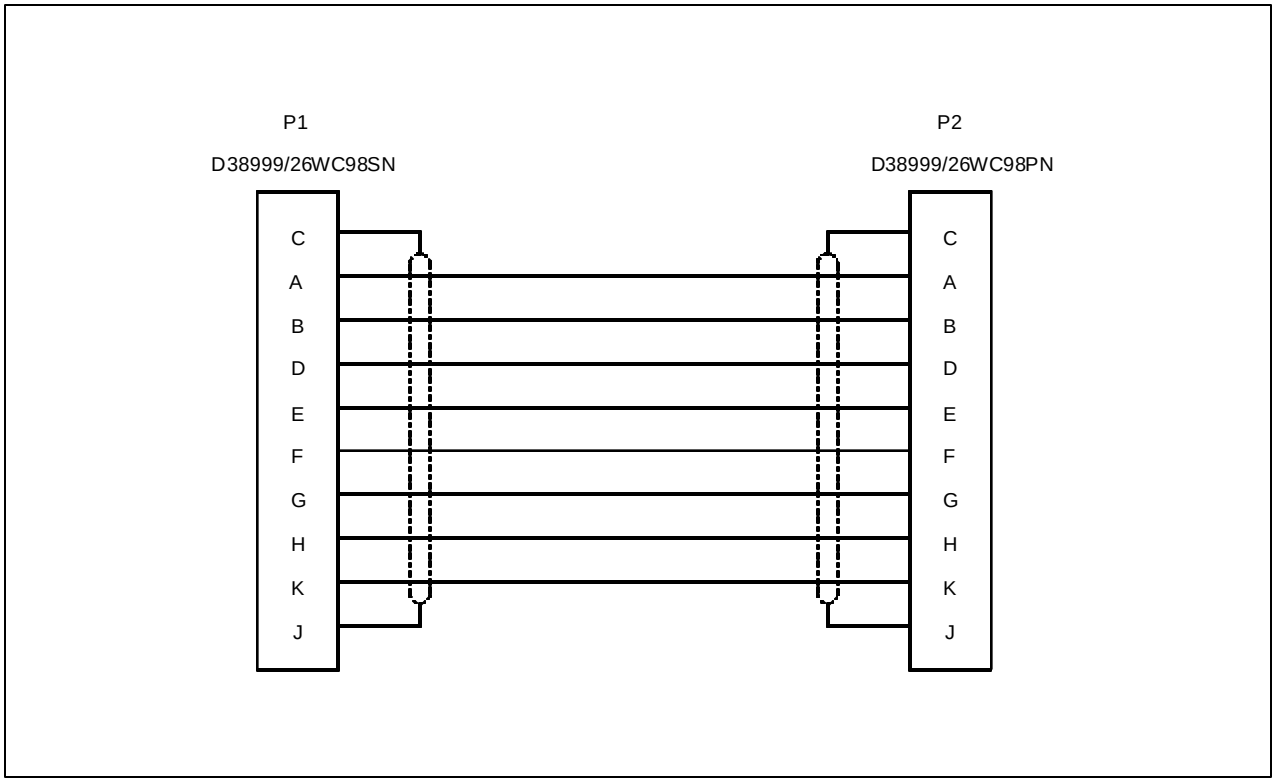

Figure 3-55. Interconnection Cable (30-Meter), P/N WA6706719-0, Wiring Diagram

SECTION XIII. POWER CABLE (50-METER), P/N WA6706717-0

SECTION CONTENTS

		Page
3.13	POWER CABLE (50-METER), P/N WA6706717-0.	3-146
3.13.1	GENERAL.	3-146
3.13.2	TEST EQUIPMENT AND SPECIAL TOOLS REQUIRED.	3-146
3.13.3	MATERIALS REQUIRED.	3-147
3.13.4	GENERAL REPAIR REQUIREMENTS.	3-147
3.13.5	INSPECTION.	3-149
3.13.6	CONTINUITY TEST.	3-150

3.13 POWER CABLE (50-METER), P/N WA6706717-0

3.13.1 General

The following paragraphs provide repair procedures and maintenance information for the Power Cable (50-Meter), P/N WA6706717-0. Source, maintenance, and recoverability codes are listed below:

U.S. Army	PAOFF
U.S. Marine Corps	PAOFF

3.13.2 Test Equipment and Special Tools Required

Test equipment and special tool requirements are listed in Table 3-37. Unless otherwise specified, the test equipment and special tools listed below will be used for testing the Power Cable (50-Meter). Each commercially available item of test equipment can be replaced by equipment equivalent to that listed.

Table 3-37. Test Equipment and Special Tools Required

Nomenclature	Part/Spec. No.	Appendix C Figure 27 Item No.
Belt Wrench	Bertsch Co. No. 1, Model 31335	48
Crimping Tool	Daniels, Model M22520/1-01	7
Contact Positioner	Daniels, Model M22520/1-02	10
Digital Multimeter	Fluke, Model 77-2	5
Electronic Equipment Tool Kit	PPL863	11
Heat Gun	Master-Mite, Model 10008	4
Insertion/Extraction Tool	M81969/14-02	2

3.13.3 Materials Required

Repair materials and other consumable item requirements are listed in Table 3-38.

Table 3-38. Materials Required

Nomenclature	Part/Spec. No.	Appendix F Item No.
Adhesive	S1184	3
Adhesive	S1125	2
Label	43-143	10
Primer	747-55	17
Sealing Compound	MIL-S-22473, Grade AA	20

3.13.4 General Repair Requirements

Refer to Figure 3-56. Repair or replace cable connectors as follows:

NOTE

The following procedure applies to connector P1 or P2.

NOTE

Before replacing a connector, ensure that the replacement connector matches exactly the connector to be replaced.

a. Remove dust cap (1) from connector (2).

b. Remove screw (11), two washers (7/10), insulator (8), and nut (6) securing clamp (9) and dust cap assembly (12) to cable (5).

CAUTION

Using excess force when cutting boot may cause damage to wiring inside boot.

c. Using sharp knife, carefully cut boot (4) from end to end.

d. Pry boot (4) off of back shell (3) and cable (5).

e. Using connector pliers (soft jaw), remove back shell (3) from connector body (2) and slide away from connector (2).

f. Tag and label wires.

g. Using pin extraction tool, remove damaged pin and wire from connector body (2). Remove serviceable pins and wires also to facilitate installation of new boot (4).

h. Remove connector (2) from cable (5).

i. Move back shell (3) away from end of cable (5).

j. Cut wire as close as possible to end of damaged pin.

k. Strip insulation from wire as required ensuring that wire will seat properly in pin.

l. Using crimping tool, crimp pin to wire.

NOTE

Failure to place heat shrink boot and back shell on cable at this point and in correct sequence will require later removal of connector from cable to facilitate installation of boot and back shell.

m. Slide new boot (4) on cable (5).

n. Using insertion tool, insert pins into connector body (2).

NOTE

Failure to perform continuity check at this point may require complete disassembly of connector to correct improperly terminated connector pins.

o. Perform continuity test of cable in accordance with para. 3.13.6 and Table 3-39. If cable checks good, proceed to step p.

p. Using small wire brush, clean sealing compound residue from threads of connector body (2) and back shell (3).

q. Apply primer to threads of connector body (2) and back shell (3).

r. Apply sealing compound to threads of connector body (2) and back shell (3).

s. Screw back shell (3) on connector body (2) and torque to 3.7 ft lb (5 N.m).

t. Apply S1184 adhesive to inside of boot (4) to bond with cable shield and back shell (3).

u. Apply S1125 adhesive outside boot (4) for bonding to cable jacket (5) and back shell (3).

v. Place boot (4) on back shell (3).

w. Using heat gun, apply heat uniformly to boot (4) until boot shrinks to form secure seal around back shell (3) and cable (5).

x. Install clamp (9) and dust cap assembly (12) on cable with screw (11), two washers (7/10), insulator (8), and nut (6).

y. Install dust cap (1) on connector (2).

3.13.5 Inspection

Refer to Figure 3-56. Inspect Power Cable (50-Meter) as follows:

a. Inspect all parts for damage, wear, and deterioration.

b. Inspect all wiring for bent or broken leads; cracked, frayed, deteriorated, worn, overheated, or burned insulation, and security of attachment.

c. Inspect connectors (2/13) for broken, bent, recessed, loose, damaged, or missing pins.

d. Inspect protective caps (1/14) for security of attachment.

3.13.6 Continuity Test

Refer to Table 3-39, Figures 3-57 and 3-58. Check wiring continuity as follows:

a. Set DMM to RESISTANCE mode.

b. Set DMM to OHMS X 1 mode.

c. Zero DMM to eliminate internal resistance of meter and resistance of test leads.

d. Measure continuity between connector plugs P1 and P2 in accordance with Table 3-39. Resistance should not exceed 0.5 ohm.

e. Set DMM to OHMS X 10K mode.

f. Measure resistance between each connector pin and adjacent pins. Resistance should be infinite.

g. If incorrect readings are noted in step d. or f., repair wire or connector.

Table 3-39. Power Cable (50-Meter) Wiring

From Connector - Pin	To Connector - Pin
P1 - A	P2 - A
P1 - B	P2 - B
P1 - C	P2 - C

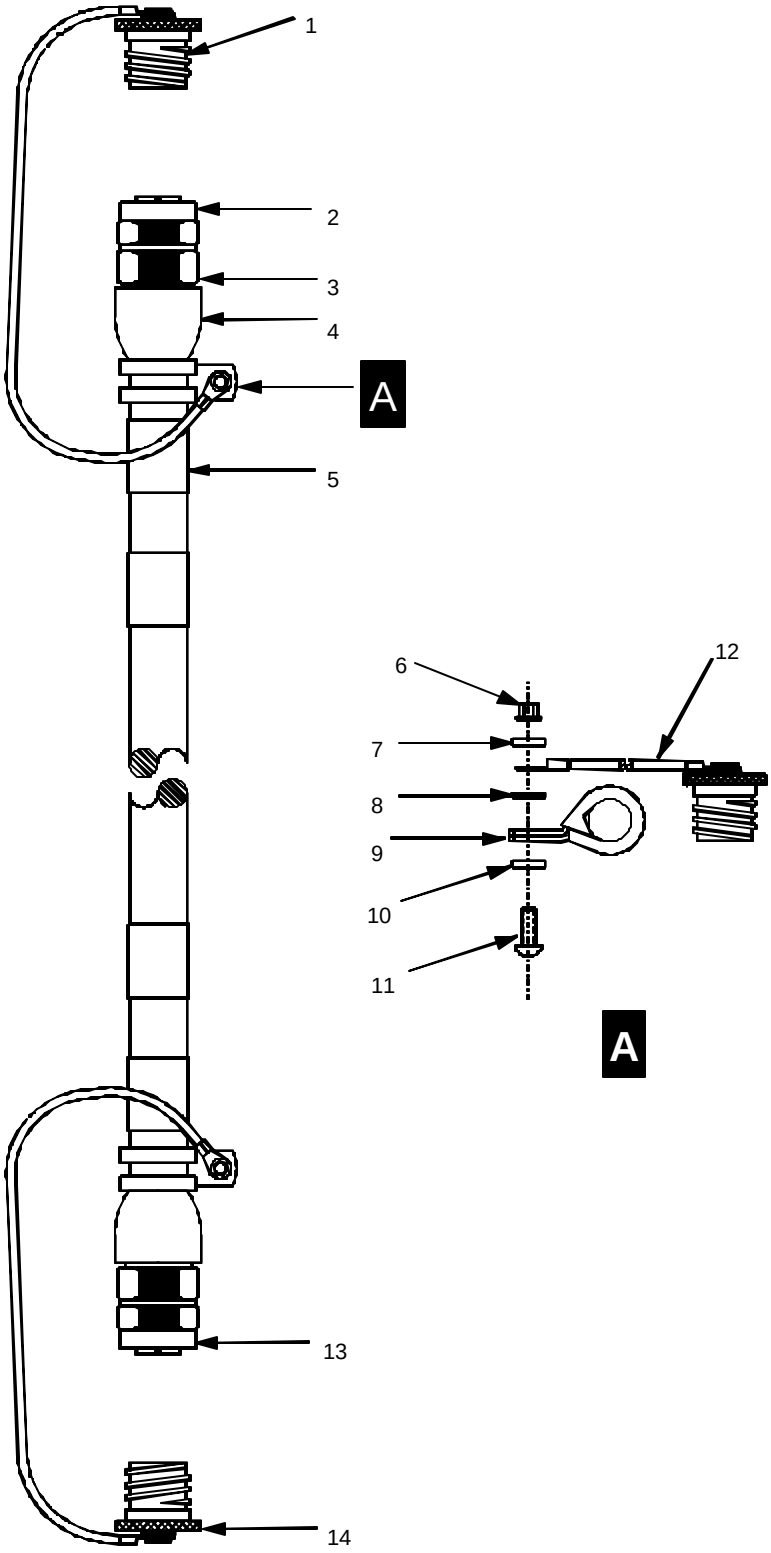

Figure 3-56. Power Cable (50-Meter), P/N WA6706717-0

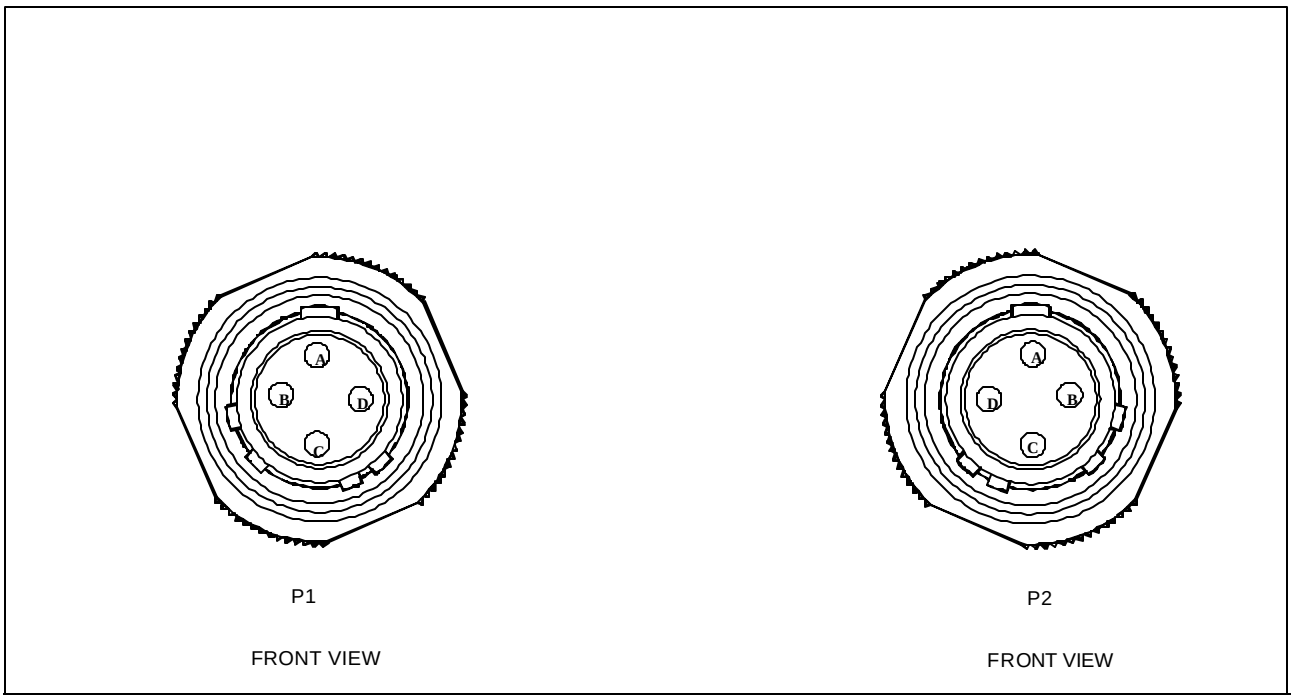

Figure 3-57. Power Cable (50-Meter), P/N WA6706717-0, Connector Pin Locations

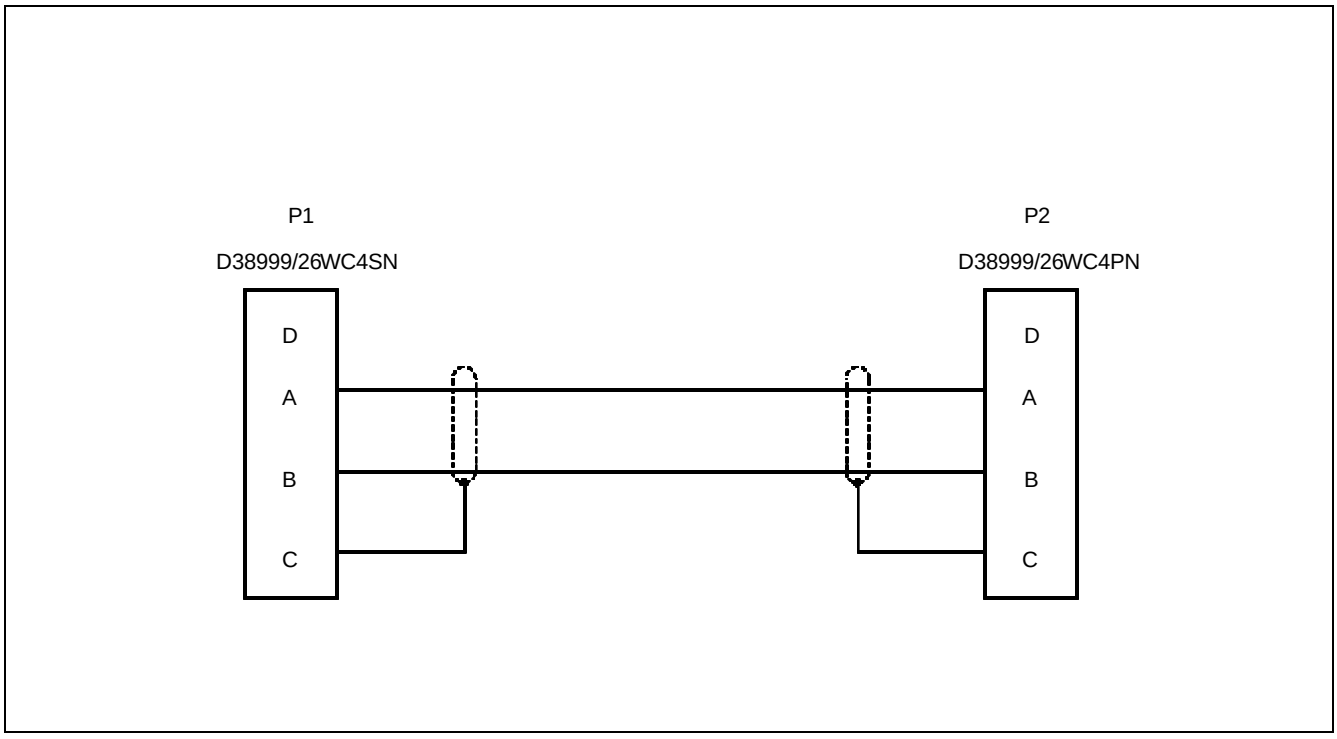

Figure 3-58. Power Cable (50-Meter), P/N WA6706717-0, Wiring Diagram

SECTION XIV. SECONDARY POWER SOURCE CABLE, P/N WA6708023-0

SECTION CONTENTS

		Page
3.14	SECONDARY POWER SOURCE CABLE, P/N WA6708023-0	3-152
3.14.1	GENERAL	3-152
3.14.2	TEST EQUIPMENT AND SPECIAL TOOLS REQUIRED	3-152
3.14.3	MATERIALS REQUIRED	3-153
3.14.4	GENERAL REPAIR REQUIREMENTS	3-153
3.14.5	INSPECTION	3-155
3.14.6	CONTINUITY TEST	3-155

3.14 SECONDARY POWER SOURCE CABLE, P/N WA6708023-0

3.14.1 General

The following paragraphs provide repair procedures and maintenance information for the Secondary Power Source Cable, P/N WA6708023-0. Source, maintenance, and recoverability codes are listed below:

U.S. Army	PAOFF
U.S. Marine Corps	PAOFF

3.14.2 Test Equipment and Special Tools Required

Test equipment and special tool requirements are listed in Table 3-40. Unless otherwise specified, the test equipment and special tools listed below will be used for testing the Secondary Power Source Cable. Each commercially available item of test equipment can be replaced by equipment equivalent to that listed.

Table 3-40. Test Equipment and Special Tools Required

Nomenclature	Part/Spec. No.	Appendix C Figure 27 Item No.
Belt Wrench	Bertsch Co. No. 1, Model 31335	48
Crimping Tool	Daniels, Model M22520/1-01	7
Contact Positioner	Daniels, Model M22520/1-02	10
Digital Multimeter	Fluke, Model 77-2	5
Electronic Equipment Tool Kit	PPL863	11
Heat Gun	Master-Mite, Model 10008	4
Insertion/ExtractionTool	M81969/14-02	2

3.14.3 Materials Required

Repair materials and other consumable item requirements are listed in Table 3-41.

Table 3-41. Materials Required

Nomenclature	Part/Spec. No.	Appendix F Item No.
Adhesive	S1184	3
Adhesive	S1125	2
Label	43-143	10
Primer	747-55	17
Sealing Compound	MIL-S-22473, Grade AA	20

3.14.4 General Repair Requirements

Refer to Figure 3-59. Repair or replace cable connectors as follows:

NOTE

Before replacing a connector, ensure that the replacement connector matches exactly the connector to be replaced.

NOTE

The following procedure applies to connector P1 or P2.

a. Remove dust cap (1) from connector (2).

b. Remove screw (11), two washers (7/10), insulator (8), and nut (6) securing clamp (9) and dust cap assembly (12) to cable (5).

CAUTION

Using excess force when cutting boot may cause damage to wiring inside boot.

c. Using sharp knife, carefully cut boot (4) from end to end.

d. Pry boot (4) off of back shell (3) and cable (5).

e. Using connector pliers (soft jaw), remove back shell (3) from connector body (2) and slide away from connector (2).

f. Tag and label wires.

g. Using pin extraction tool, remove damaged pin and wire from connector body (2).

Remove serviceable pins and wires also to facilitate installation of new boot (4).

h. Move back shell (3) away from end of cable (5).

i. Cut wire as close as possible to end of damaged pin.

j. Strip insulation from wire as required ensuring that wire will seat properly in pin.

k. Using crimping tool, crimp pin to wire.

NOTE

Failure to place heat shrink boot and back shell on cable at this point and in correct sequence will require later removal of connector from cable to facilitate installation of boot and back shell.

l. Slide new boot (4) on cable (5).

m. Using insertion tool, insert pins into connector body (2).

NOTE

Failure to perform continuity check at this point may require complete disassembly of connector to correct improperly terminated connector pins.

n. Perform continuity test of cable in accordance with para. 3.14.6 and Table 3-42. If cable checks good, proceed to step p.

o. Using small wire brush, clean sealing compound residue from threads of connector body (2) and back shell (3).

p. Apply primer to threads of connector body (2) and back shell (3).

q. Apply sealing compound to threads of connector body (2) and back shell (3).

r. Screw back shell (3) on connector body (2) and torque to 3.7 ft lb (5 N.m).

s. Apply S1184 adhesive to inside of boot (4) to bond with cable shield and back shell (3).

t. Apply S1125 adhesive outside boot (4) for bonding to cable jacket (5) and back shell (3).

u. Place boot (4) on back shell (3).

v. Using heat gun, apply heat uniformly to boot (4) until boot shrinks to form secure seal around back shell (3) and cable (5).

w. Install clamp (9) and dust cap assembly (12) on cable with screw (11), two washers (7/10), insulator (8), and nut (6).

x. Install dust cap (1) on connector (2).

3.14.5 Inspection

Refer to Figure 3-59. Inspect Secondary Power Source Cable as follows:

a. Inspect all parts for damage, wear, and deterioration.

b. Inspect all wiring for bent or broken leads; cracked, frayed, deteriorated, worn, overheated, or burned insulation, and security of attachment.

c. Inspect connectors (2/13) for broken, bent, recessed, loose, damaged, or missing pins.

d. Inspect protective cap (1) for security of attachment.

3.14.6 Continuity Test

Refer to Table 3-42, Figures 3-60 and 3-61. Check wiring continuity as follows:

a. Set DMM to RESISTANCE mode.

b. Set DMM to OHMS X 1 mode.

c. Zero DMM to eliminate internal resistance of meter and resistance of test leads.

d. Measure continuity between connector plugs P1 and P2 IAW Table 3-42. Resistance should not exceed 0.5 ohm.

e. Set DMM to OHMS X 10K mode.

f. Measure resistance between each connector pin and adjacent pins. Resistance should be infinite.

g. If incorrect readings are noted in step d. or f., repair wire or connector.

h. Remove connector (2) from cable (5).

Table 3-42. Secondary Power Source Cable Wiring

From Connector - Pin	To Connector - Pin
P1 - A	P2 - 5
P1 - B	P2 - 1
P1 - C	P1 Shield
P2 - 2	P2 - 4

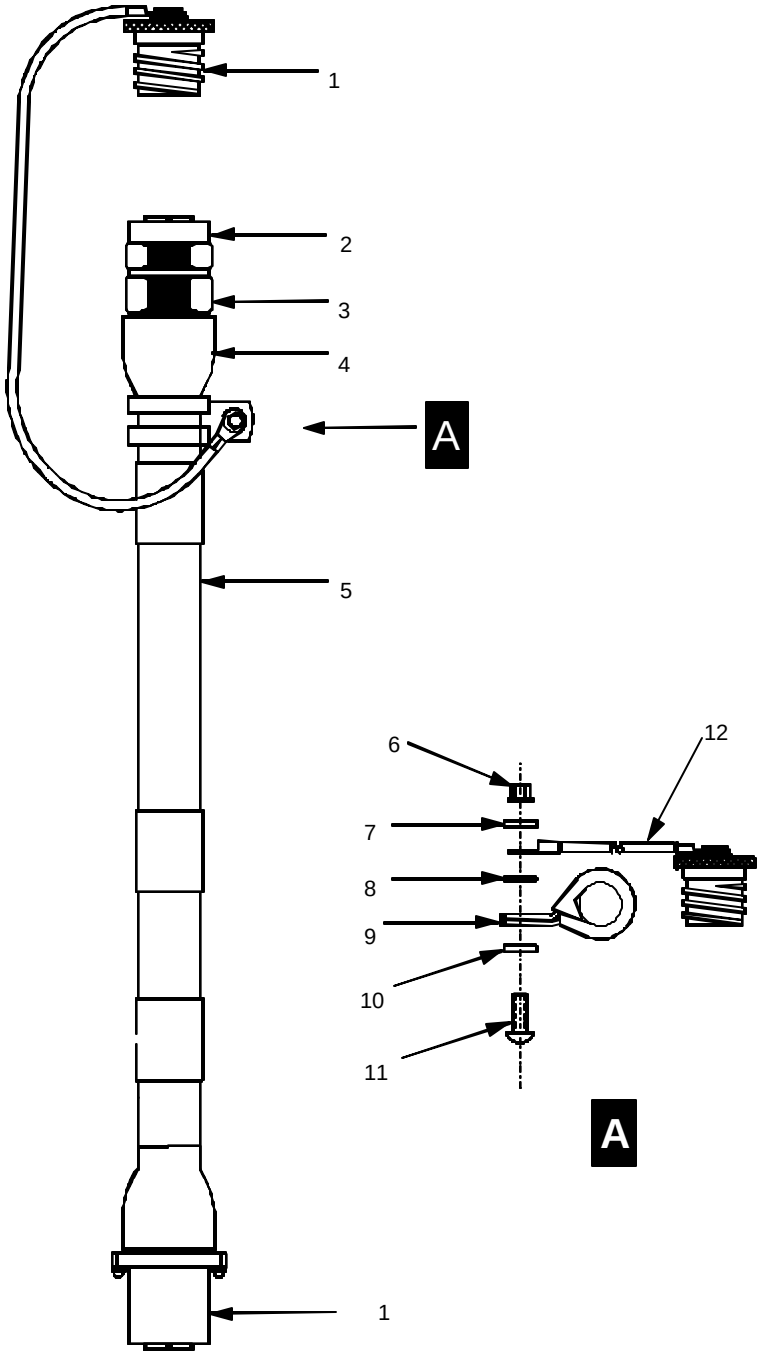

Figure 3-59. Secondary Power Source Cable, P/N WA6708023-0

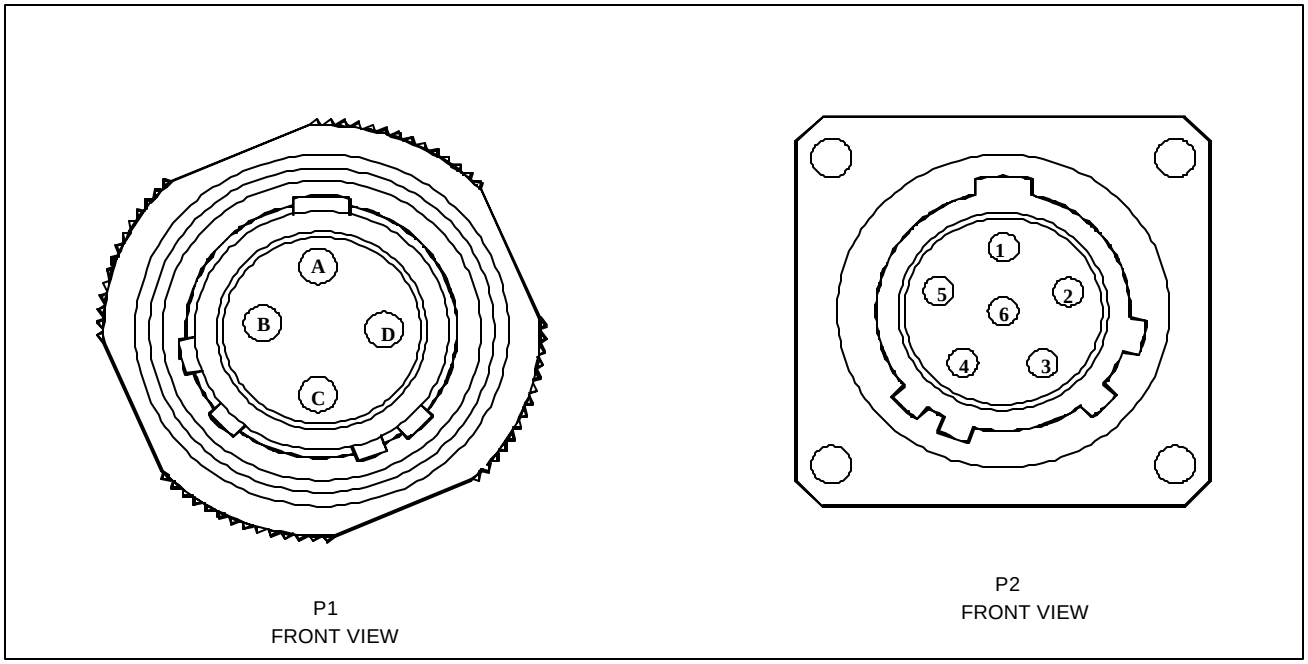

Figure 3-60. Secondary Power Source Cable, P/N WA6708023-0, Connector Pin Locations

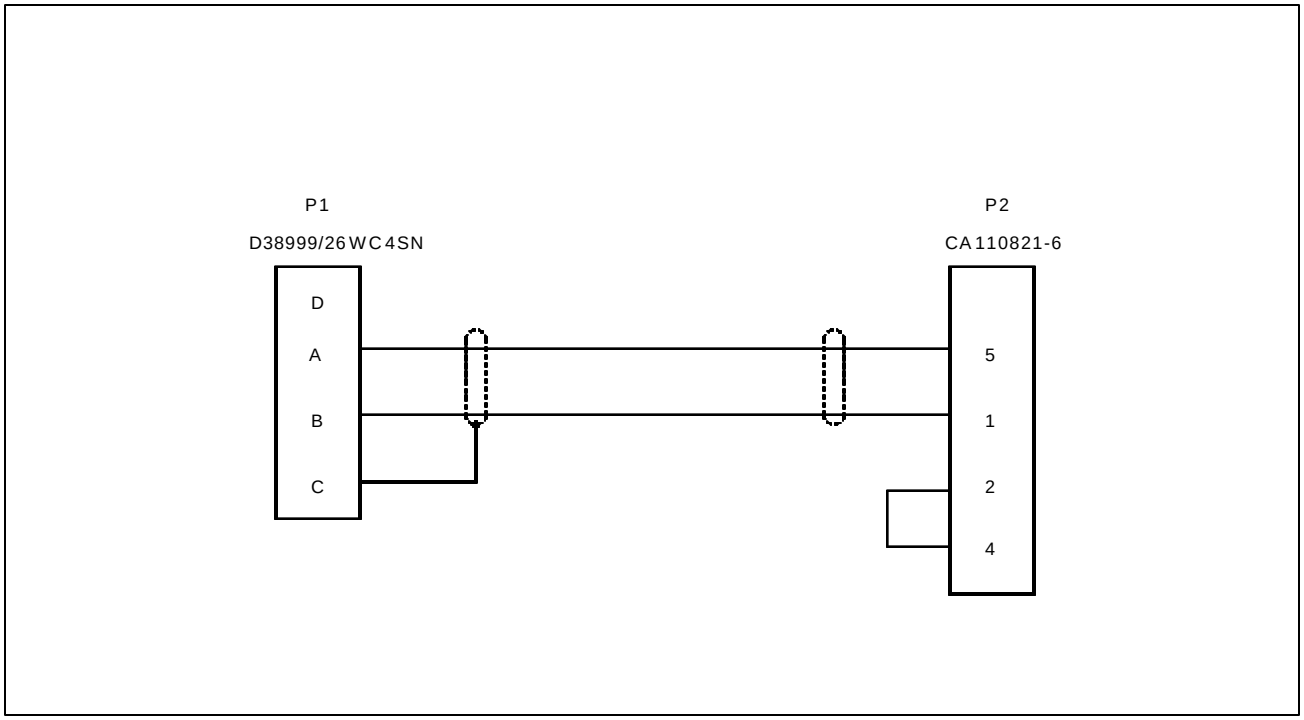

Figure 3-61. Secondary Power Source Cable Wiring Diagram

SECTION XV. POWER ADAPTER, P/N WA6706718-0

SECTION CONTENTS

		Page
3.15	POWER ADAPTER, P/N WA6706718-0	3-158
3.15.1	GENERAL	3-158
3.15.2	TEST EQUIPMENT AND SPECIAL TOOLS REQUIRED	3-158
3.15.3	MATERIALS REQUIRED	3-159
3.15.4	GENERAL REPAIR REQUIREMENTS	3-159
3.15.5	DISASSEMBLY	3-160
3.15.6	ASSEMBLY	3-160
3.15.7	INSPECTION	3-160
3.15.8	CONTINUITY TEST	3-160

3.15 POWER ADAPTER, P/N WA6706718-0

3.15.1 General

The following paragraphs provide repair procedures and maintenance information for the Power Adapter, P/N WA6706718-0. Source, maintenance, and recoverability codes are listed below:

U.S. Army	PAOFF
U.S. Marine Corps	PAOFF

3.15.2 Test Equipment and Special Tools Required

Test equipment and special tool requirements are listed in Table 3-43. Unless otherwise specified, the test equipment and special tools listed below will be used for testing the Power Adapter. Each commercially available item of test equipment can be replaced by equipment equivalent to that listed.

Table 3-43. Test Equipment and Special Tools Required

Nomenclature	Part/Spec. No.	Appendix C Figure 27 Item No.
Crimping Tool	M22920/1-01	7
Crimping Tool Die	M22520/1-02	10
Digital Multimeter	Fluke, Model 77-2	5
Electronic Equipment Tool Kit	PPL863	11
Heat Gun	Master-Mite, Model 10008	4
Insertion/ExtractionTool	M81969/14-02	2

3.15.3 Materials Required

Repair materials and other consumable item requirements are listed in Table 3-44.

Table 3-44. Materials Required

Nomenclature	Part/Spec. No.	Appendix F Item No.
Label	43-143	10
Wire	M16878/4-18-9	30
Solder	SN63WRMAP3	23
Primer	747-55	17
Sealing Compound	83-31	16
Methylethylketone	ASTM-D-740	14

3.15.4 General Repair Requirements

Refer to Table 3-45 and Figure 3-62. Repair Power Adapter as follows:

NOTE

The following procedure applies to connector P1 (1). In case of damage to connector P2 (2) the Power Adapter is unrepairable.

NOTE

Before replacing a connector ensure that the replacement matches the one to be replaced.

a. Tag and label wires prior to pins removal.

b. Using pin extraction tool, remove damaged pins and wires from connector body.

c. Cut wire as close as possible to end of damaged pin.

d. Strip insulation from wire as required ensuring that wire will fit properly in pin.

e. Use crimping tool to crimp pin to wire.

f. Use insertion tool to insert pins into connector body.

g. Perform continuity test of cable IAW Table 3-45.

3.15.5 Disassembly

Refer to Figure 3-62.

a. Unscrew six screws (6) from cover.

b. Carefully detached Power Adapter into two halves. Do not strain wires.

c. Remove broken pin(s) or faulty wire(s) by carefully extracting the applicable pin(s) from connector P1 (1) using extraction tool.

d. Disassemble broken connector P1 by first labeling all wires and extracting pins from connector P1 using extraction tool. Remove four screws (3), four washers (4), and four nuts (5) to remove connector (1).

e. Replace the entire Power Adapter Assy if connector P2 (2) is defective or housing is broken.

3.15.6 Assembly

Refer to Figure 3-62.

a. Assemble connector P1 (1) using four screws (3), four washers (4), and four nuts (5). Make sure to place P2 shield wire terminal on one of the screw retaining P1.

b. Assemble the halves of Power Adapter.

c. Clean connector body and threads.

d. Apply primer and locking compound to six screws (6) to secure two halves of Power Adapter.

3.15.7 Inspection

Refer to Figure 3-62. Inspect Power Adapter as follows:

a. Inspect all parts for damage, wear, and deterioration.

b. Inspect all wiring for bent or broken leads; cracked, frayed, deteriorated, worn, overheated, or burned insulation, and security of attachment.

c. Inspect connectors (P1 and P2) for broken, bent, recessed, loose, damaged, or missing pins.

3.15.8 Continuity Test

Refer to Table 3-45, Figures 3-63 and 3-64. Check wiring continuity as follows:

a. Set DMM to RESISTANCE mode.

b. Set DMM to OHMS X 1 mode.

c. Zero DMM to eliminate internal resistance of meter and resistance of test leads.

d. Measure continuity between connector plugs P1 and P2 in accordance with Table 3-45. Resistance should not exceed 0.1 ohm.

e. Set DMM to OHMS X 10K mode.

f. Measure resistance between each connector pin and adjacent pins. Resistance should be infinite.

g. If incorrect readings are noted in step d. or f., repair wire(s) or connector.

Table 3-45. Power Adapter Wiring

From Connector - Pin	To connector - Pin
P1 -A	P2 +
P1 - B	P2 -
P1 - C	P2 Shield
P1 - C	P1 - B

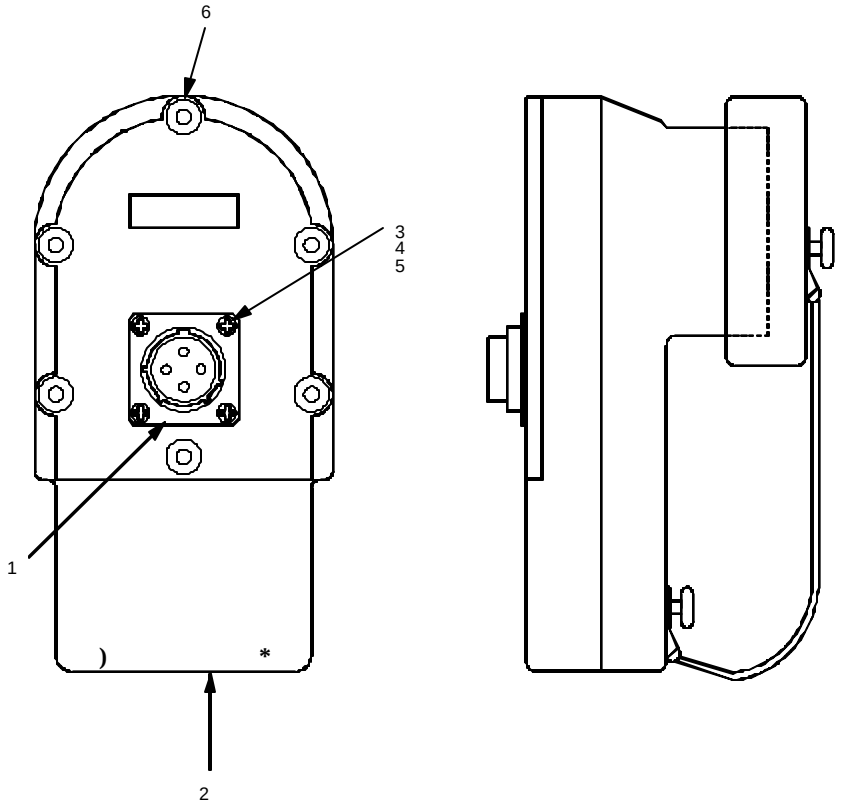

1. CONNECTOR P1
2. CONNECTOR P2

CMVS011/WA67067

Figure 3-62. Power Adapter, P/N WA6706718-0

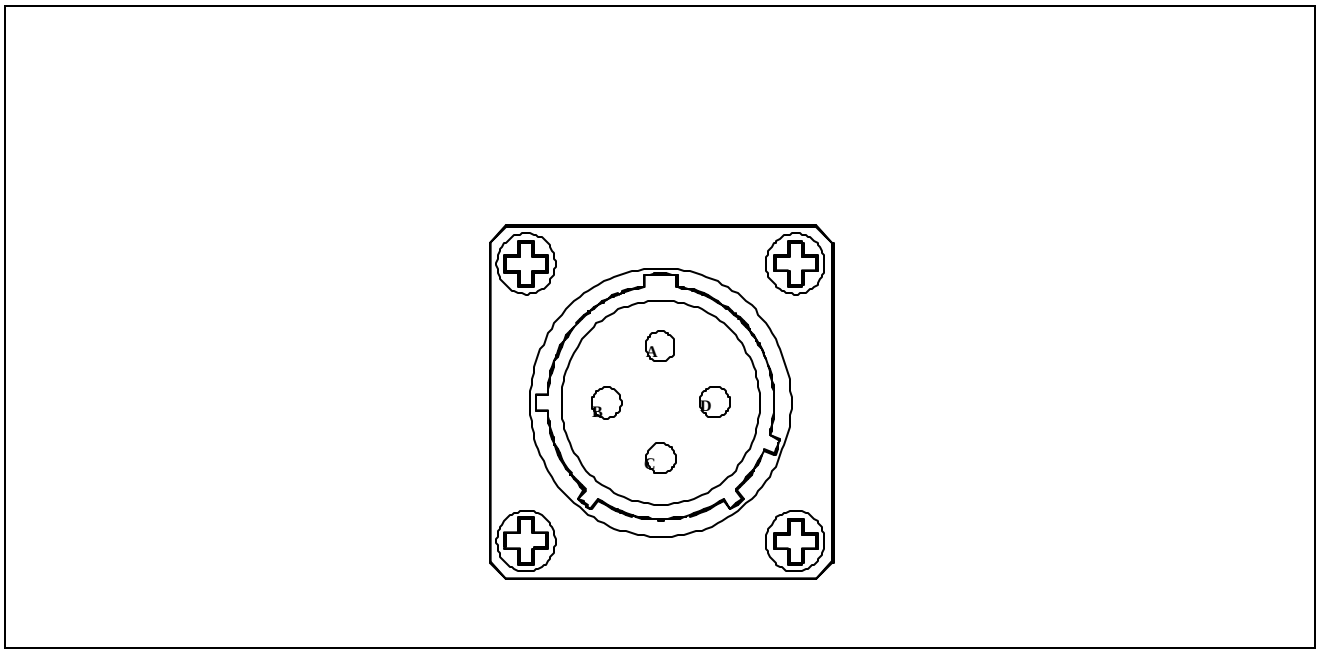

Figure 3-63. Power Adapter, P/N WA6706718-0, Connector Pin Locations

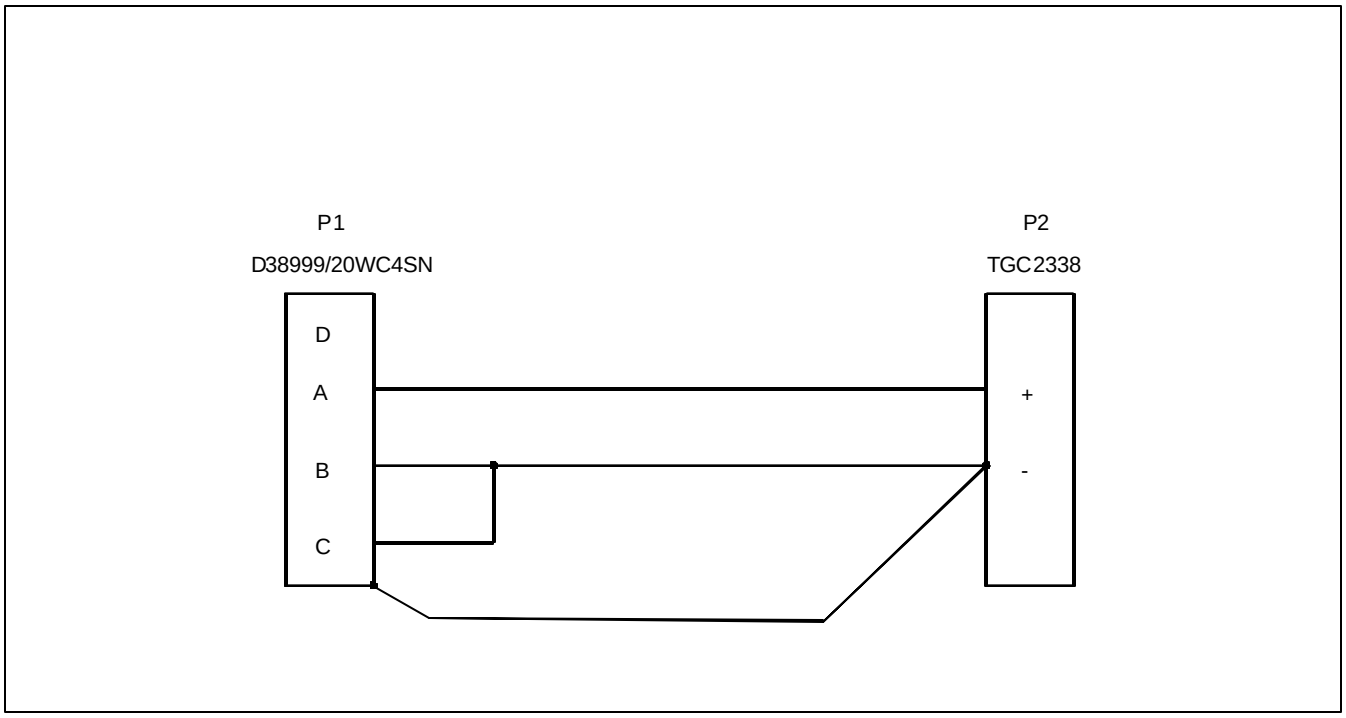

Figure 3-64. Power Adapter, P/N WA6706718-0, Wiring Diagram

SECTION XVI. FRONT PANEL ASSEMBLY, P/N AY6706708-0

SECTION CONTENTS

		Page
3.16	FRONT PANEL ASSEMBLY, P/N AY6706708-0	3-163
3.16.1	GENERAL	3-163
3.16.2	TEST EQUIPMENT AND SPECIAL TOOLS REQUIRED	3-164
3.16.3	MATERIALS REQUIRED	3-164
3.16.4	GENERAL REPAIR REQUIREMENTS	3-164
3.16.5	REMOVAL	3-165
3.16.6	INSTALLATION	3-165
3.16.7	REPLACEMENT OF ADHESIVE-MOUNTED EMI GLASS (WINDOW)	3-170

3.16 FRONT PANEL ASSEMBLY, P/N AY6706708-0

3.16.1 General

The following paragraphs provide repair procedures and maintenance information for the Front Panel Assembly, P/N AY6706708-0. Only some components of the assembly are covered in this section because most of the major components have their own sections in this chapter. Refer to the appropriate sections for repair procedures and maintenance instructions of components not listed in the source, maintenance and recoverability table below.

Description	Part No.	U.S. Army	U.S. Marine Corps
Front Panel Assembly	AY6706708-0	PAFDD	PAFHH
Card Cage:			
* Cover Cage	MP6706561-0	PAFZZ	XBFZZ
* Wall, Left	AM6706554-0	XAFZZ	XBFFF
* Wall, Right	AM6706555-0	XAFZZ	XBFFF
* Motherboard	AY6706706-0	PADDD	PAFFF
EMI Glass	MP6706701-0	PAFZZ	PAFZZ

3.16.2 Test Equipment and Special Tools Required

Test equipment and special tools requirements are listed in Table 3-46. Unless otherwise specified, the test equipment and special tools listed below will be used for testing the Front Panel Assy. Each commercially available item of test equipment can be replaced by equipment equivalent to that listed.

Table 3-46. Test Equipment and Special Tools Required

Nomenclature	Part/Spec. No.	Appendix C Figure 27 Item No.
ESD Work Station Kit	M87893-02	13
Electronic Equipment Tool Kit	PPL863	11

3.16.3 Materials Required

Repair materials and other consumable items required are listed in Table 3-47.

Table 3-47. Materials Required

Nomenclature	Part/Spec. No.	Appendix F Item No.
Adhesive	RTV732	34
Acetone	OA51	1
Bus Wire	QQ-W-343/S-22-S1T	29
Methylethylketone (MEK)	ASTM-D-740	14
Adhesive	Cho Bond: 1038	36
Primer	Cho Bond: 1086	37

3.16.4 General Repair Requirements

Refer to Figure 3-65. The following general requirements apply to repair of the Front Panel Assy.

CAUTION

The Front Panel Assy contains components subject to damage by electrostatic discharge. Use approved grounding procedures before touching or inserting subassemblies.

a. Disassemble Front Panel sub-assemblies only to the level required for repair.
b. Exercise caution when removing or installing hardware inside the Front Panel Assy to avoid any wires or harness damage by pinching, cutting and insulation damage.
c. Protect EMI glass while handling the Front Panel Assy to avoid accidental scratches or other damage to the glass.
d. Repair Mother Board and Card Cage as required IAW TM 9-254 and Section VII of this Chapter.

3.16.5 Removal

Refer to Figure 3-65.

NOTE

The following removal procedure is intended to remove the Card Cage in order to gain access to Display Module, Keyboard CCA, EMI Module and other panel accessories such as ON/OFF switch, potentiometer, LED, EMI glass.

a. Loosen 10 captive screws and separate the back cover from the front panel. Refer to para. 3.2.5, (Fig 3-1 Item 1)

b. Remove eight screws (1) and eight washers (2) securing Card Cage (3) to Front Panel Assy (4).

c. Carefully separate Card Cage from Front Panel Assy. Do not strain Harness Assy (5).

d. Loosen connector screws (14) securing connectors P4 (6) and P5 (7) to Motherboard (8).

e. Disconnect connectors P4 and P5 from Motherboard.

f. Remove Card Cage.

3.16.6 Installation

Refer to Figure 3-65.

NOTE

The following installation procedure is used after the troubleshooting and installation of the Front Panel sub-assemblies are completed.

a. Visually inspect that the following sub-assemblies are securely fastened using all attaching hardware:

1. Harness Assy including all P-clamps.
2. Display Module.
3. Keyboard Assy.
4. ON/OFF SW, LED, potentiometer.
5. EMI Module (output pins are not bent or broken).

b. Install connectors P4 (6) and P5 (7) to Motherboard (8) using connector screws (14). Do not strain Harness Assy (5).

c. Position Card Cage (3) on Front Panel Assy.

d. Secure Card Cage using 8 screws (1) and 8 washers (2).

Attach back cover to front panel and tighten 10 captive screws. Refer to para. 3.2.6.

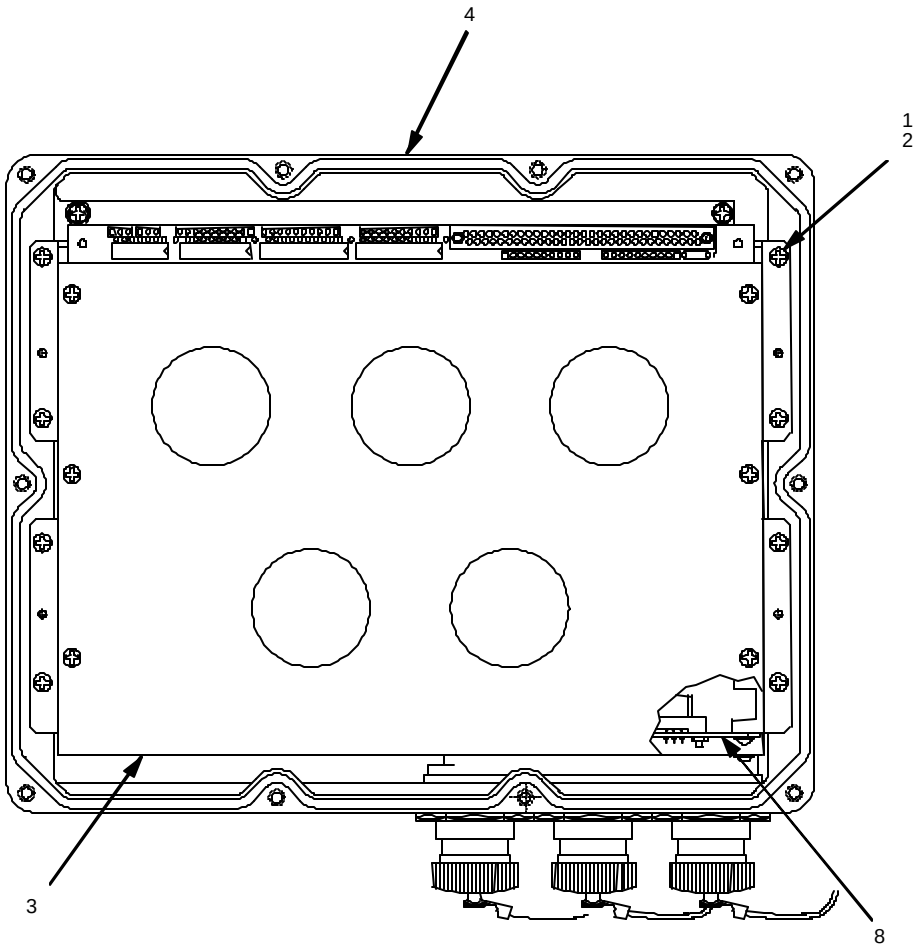

VIEW WITHOUT COVER

Figure 3-65. Front Panel Assy, P/N AY6706708-0 (Sheet 1 of 4)

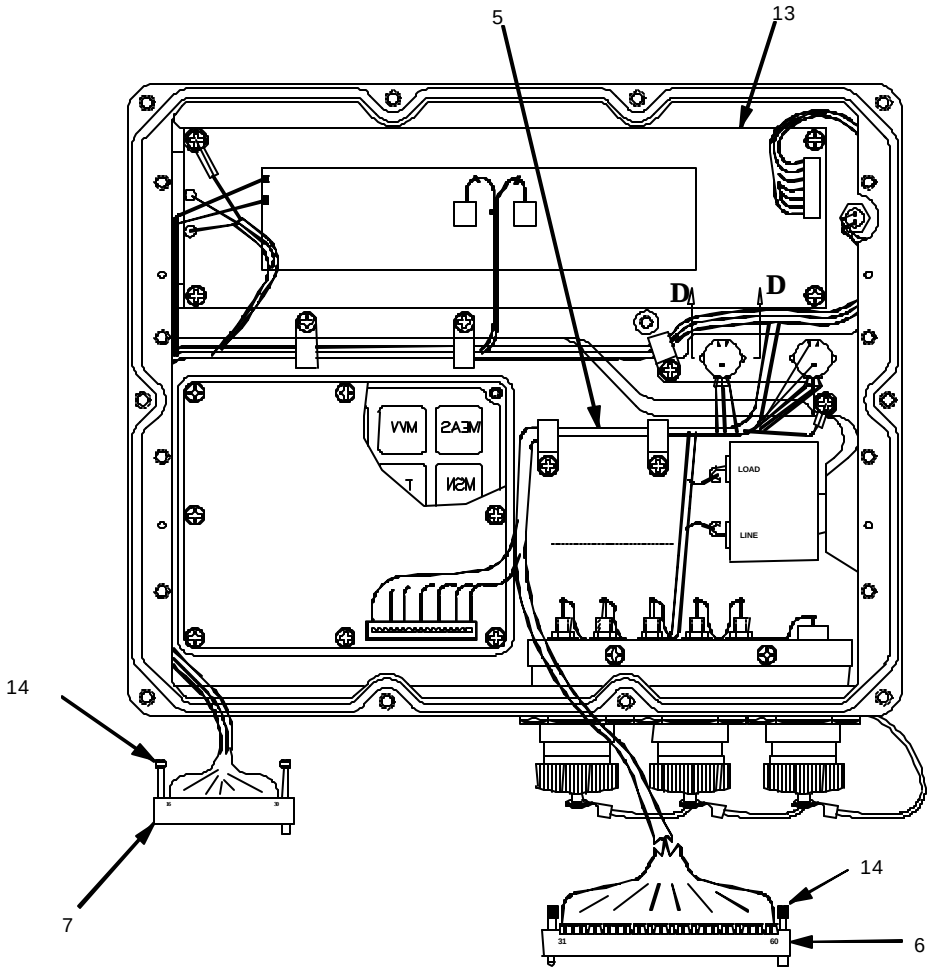

Figure 3-65. Front Panel Assy, P/N AY6706708-0 (Sheet 2 of 4)

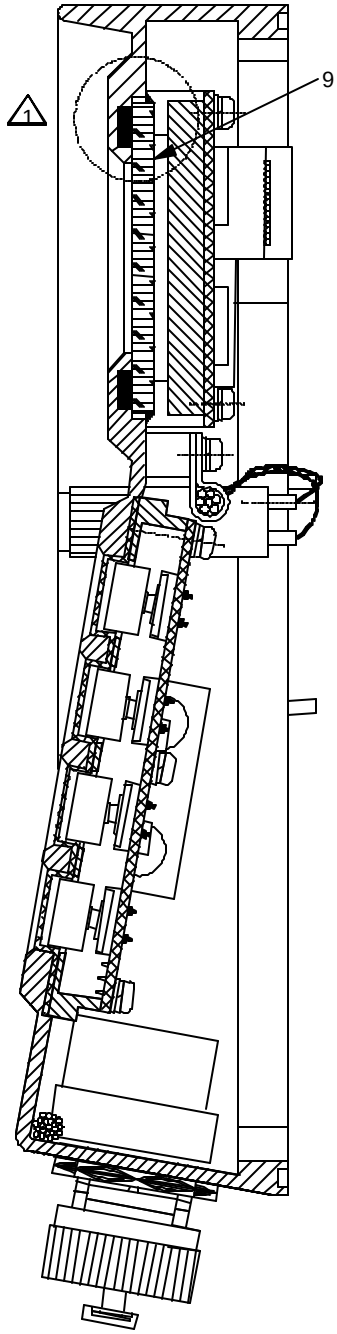

1 DETAIL VIEW OF EMI GLASS (WINDOW) ON SHEET 4

CROSS SECTION VIEW

Figure 3-65. Front Panel Assy, P/N AY6706708-0 (Sheet 3 of 4)

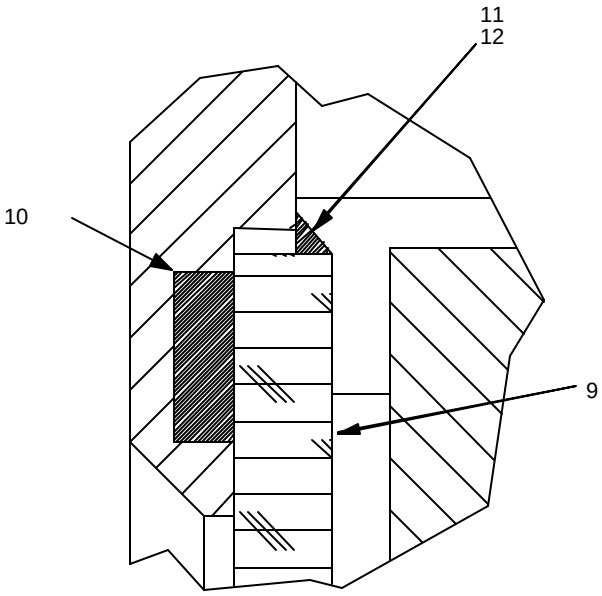

DETAIL VIEW OF EMI GLASS (WINDOW)

Figure 3-65. Front Panel Assy, P/N AY6706708-0 (Sheet 4 of 4)

3.16.7 Replacement of Adhesive-Mounted EMI Glass (Window)

Refer to Figure 3-65. Replace broken or severely scratched window as follows:

a. Perform Card Cage removal procedures IAW para. 3.16.5.
b. Remove Display Module (13) IAW removal procedure of para. 3.4.5.
c. Remove broken adhesive-mounted EMI glass (9) from panel by carefully prying it off.

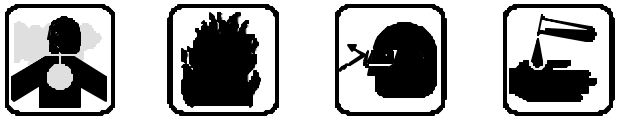

WARNING

Use methylethylketone in a well-ventilated area. Avoid breathing vapors. Keep away from flame.

d. Remove adhesive residue from panel using acid brush and clean, lint-free cloth moistened with methylethylketone solvent. Refer to para. 3.1.4 for cleaning instructions.
e. Clean mounting area using clean, lint-free cloth dampened with acetone and allow panel to dry thoroughly.

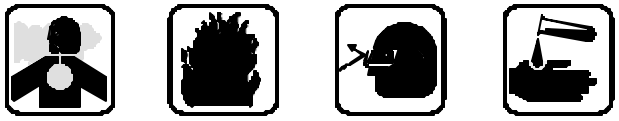

WARNING

Use RTV732 in well-ventilated area. Prevent eye and skin contact. Avoid breathing vapors.

f. Apply RTV732 (clear) adhesive all around adhesive groove (10) in uniform thickness. Position EMI glass using sufficient pressure to displace air but not adhesive. Remove excess adhesive.

CAUTION

Do not accelerate RTV curing by heating.

g. Allow bonded surface to air dry for at least 4 hours at room temperature.
h. Apply CHO BOND 1086 primer (11) and CHO BOND 1038 adhesive (12) all around EMI glass as shown in Figure 3-65.

CAUTION

Do not accelerate RTV curing by heating.

i. Allow bonded surface to air dry for at least 24 hours at room temperature.
j. Install Display Module IAW installation procedure of para. 3.4.6.

SECTION XVII. CPDU COVER ASSEMBLY, P/N AM6706693-0

SECTION CONTENTS

		Page
3.17	CPDU COVER ASSEMBLY, P/N AM6706693-0	3-171
3.17.1	GENERAL	3-171
3.17.2	SPECIAL TOOLS REQUIRED	3-171
3.17.3	MATERIALS REQUIRED	3-171
3.17.4	GENERAL REPAIR REQUIREMENTS	3-172
3.17.5	INSPECTION	3-172
3.17.6	DISASSEMBLY	3-172
3.17.7	ASSEMBLY	3-172

3.17 CPDU COVER ASSEMBLY, P/N AM6706693-0

3.17.1 General

The following paragraphs provide repair procedures and maintenance information for the CPDU Cover Assy, P/N AM6706693-0. Source, maintenance and recoverability codes are listed below.

U.S. Army	PBFFF
U.S. Marine Corps	PAFFF

3.17.2 Special Tools Required

There are no special tools required for the repair of CPDU Cover Assy.

3.17.3 Materials Required

Repair materials and other consumable item requirements are listed in Table 3-48.

Table 3-48. Materials Required

Nomenclature	Part/Spec. No.	Appendix F Item No.
Acetone	0A51	1
Acid Brush	H-B-643	6
Lint-Free Cloth	8722-0088	7
Methylethylketone (MEK)	ASTM-D-740	14
Alcohol	TT-I-735A	4 and 24

3.17.4 General Repair Requirements

Refer to Figure 3-66. The following general repair requirements apply to the repair of the CPDU Cover Assy.

a. Repair helicoils IAW general metal shop repair procedures.

b. Repair Cover Assy as required IAW TM 9-254 and Section VII of this Chapter.

3.17.5 Inspection

Inspect CPDU Cover Assy as follows:

a. Inspect all components for security of attachment.

b. Inspect all parts for damage, wear and deterioration.

c. Inspect all threaded parts for crossed, stripped or otherwise damaged threads.

d. Inspect painted surfaces for cracked, chipped, blistered or deteriorated paint.

3.17.6 Disassembly

a. Refer to Figure 3-1. Loosen 10 captive screws (1) on CPDU.

b. Reference Figure 3-1. Separate CPDU Cover Assy from front panel assy.

c. Refer to Figure 3-66. Disassemble CPDU Cover Assy as follows:

d. Loosen two screws (2) securing each of the two strap holders (3).

e. Remove two strap holders (3) and strap (4) from CPDU Cover.

3.17.7 Assembly

Refer to Figure 3-66. Assemble CPDU Cover Assy as follows:

NOTE

Before assembly, clean screw surface and screw thread with alcohol and MEK to avoid dirt or any other contamination and metal fragments.

a. Install strap (4) and two strap holders (3) to CPDU Cover using the four screws (2).

b. Attached CPDU Cover to front panel.

c. Reference Figure 3-1. Tighten 10 captive screws (1) on CPDU Cover.

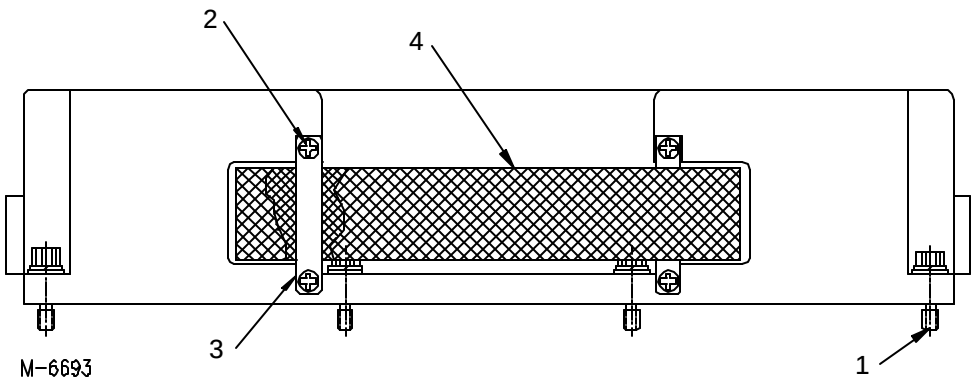

Figure 3-66. CPDU Cover Assembly, P/N AM6706693-0

SECTION XVIII. HARNESS ASSY, P/N WA6706707-0

SECTION CONTENTS

		Page
3.18	HARNESS ASSY, P/N WA6706707-0	3-174
3.18.1	GENERAL	3-174
3.18.2	TEST EQUIPMENT AND SPECIAL TOOLS REQUIRED	3-174
3.18.3	MATERIALS REQUIRED	3-175
3.18.4	GENERAL REPAIR REQUIREMENTS	3-175
3.18.5	REMOVAL	3-176
3.18.6	INSTALLATION	3-179
3.18.7	REPLACEMENT	3-179
3.18.8	INSPECTION	3-180
3.18.9	FAULT ISOLATION	3-181

3.18 HARNESS ASSY, P/N WA6706707-0

3.18.1 General

The following paragraphs provide repair procedures and maintenance information for the CPDU Harness Assy, P/N WA6706707-0. Source, maintenance and recoverability codes are listed below:

U.S. Army	PAFFF
U.S. Marine Corps	PAFFF

3.18.2 Test Equipment and Special Tools Required

Test equipment and special tools requirements are listed in Table 3-49. Unless otherwise specified, the test equipment and special tools listed below will be used for testing the Harness Assy. Each commercially available item of test equipment can be replaced by equipment equivalent to that listed.

Table 3-49. Test Equipment and Special Tools Required

Nomenclature	Part/Spec. No.	Appendix C Figure 27 Item No.
Digital Multimeter	Fluke, Model 77-2	5
Electronic Equipment Tool Kit	PPL863	11
Heat Gun	Master Mite, Model 10008	4

3.18.3 Materials Required

Repair materials and other consumable items required are listed in Table 3-50.

Table 3-50. Materials Required

Nomenclature	Part/Spec. No.	Appendix F Item No.
Adhesive	MIL-A-46146, Type III	19
Insulation Compound	MILI46058TYPE1B31	9
Solder	SN63WRMAP3	23
Label	43-143	10
Tubing Insulation	M22129-22-N	25
Wire	M16878/4-22-9	27
Lacing wire	MIL-T-43435	11
Heat Shrink Sleeve	M23053/5-107-9	31
Safety Wire	MS20995-C22	13
Heat shrink sleeve	M23053/18-202-C	32
Tape, Glass Cloth, .5" Wide	MIL-I-19166	38

3.18.4 General Repair Requirements

The following general repair requirements apply to repair of the Harness Assy.

a. Refer to para. 3.2.5 for disassembly of CPDU.
b. Tag and label wires.
c. Cut wire as close as possible to end of damaged pin.
d. Refer to Figure 3-67 for potentiometer mounting.
e. Wrap harness using tape MIL-I-19166. Overlap will be 0.1 to 0.3 in.

3.18.5 Removal

Refer to Figure 3-67. Remove Harness Assy as follows:

NOTE

Remove Harness Assy only if necessary.

a. From the front of CPDU Assy (1), remove two knobs (20) of DIM potentiometer (2) and CONT potentiometer (3) by loosening two hex key screws (21)
b. Remove two nuts (19) from two potentiometers (2 and 3).
c. Separate DIM potentiometer (2) and CONT potentiometer (3) from Front Panel Assy.
d. Tag wire before unsoldering. Unsolder Harness from LED (5).
e. Remove shield terminal screw (6) from Front Panel Assy.
f. Remove two screws (7) holding P clamps (8).
g. Carefully remove Keyboard connector (9).
h. Remove nut (10) at ON/OFF switch (11) and separate switch from Front Panel Assy (1).
i. Cut safety wire (12) from connectors J1 (13), J2 (14), and J3 (15) at EMI Module (16).
j. Remove dust cap (18) from connector J1, J2, and J3.
k. Loosen three nuts (17) at connectors J1, J2, and J3.
l. Remove nuts from connector J1, J2, and J3.
m. Separate EMI Module (16) from Front Panel Assy.
n. Remove Harness Assy (4) from Front Panel Assy.

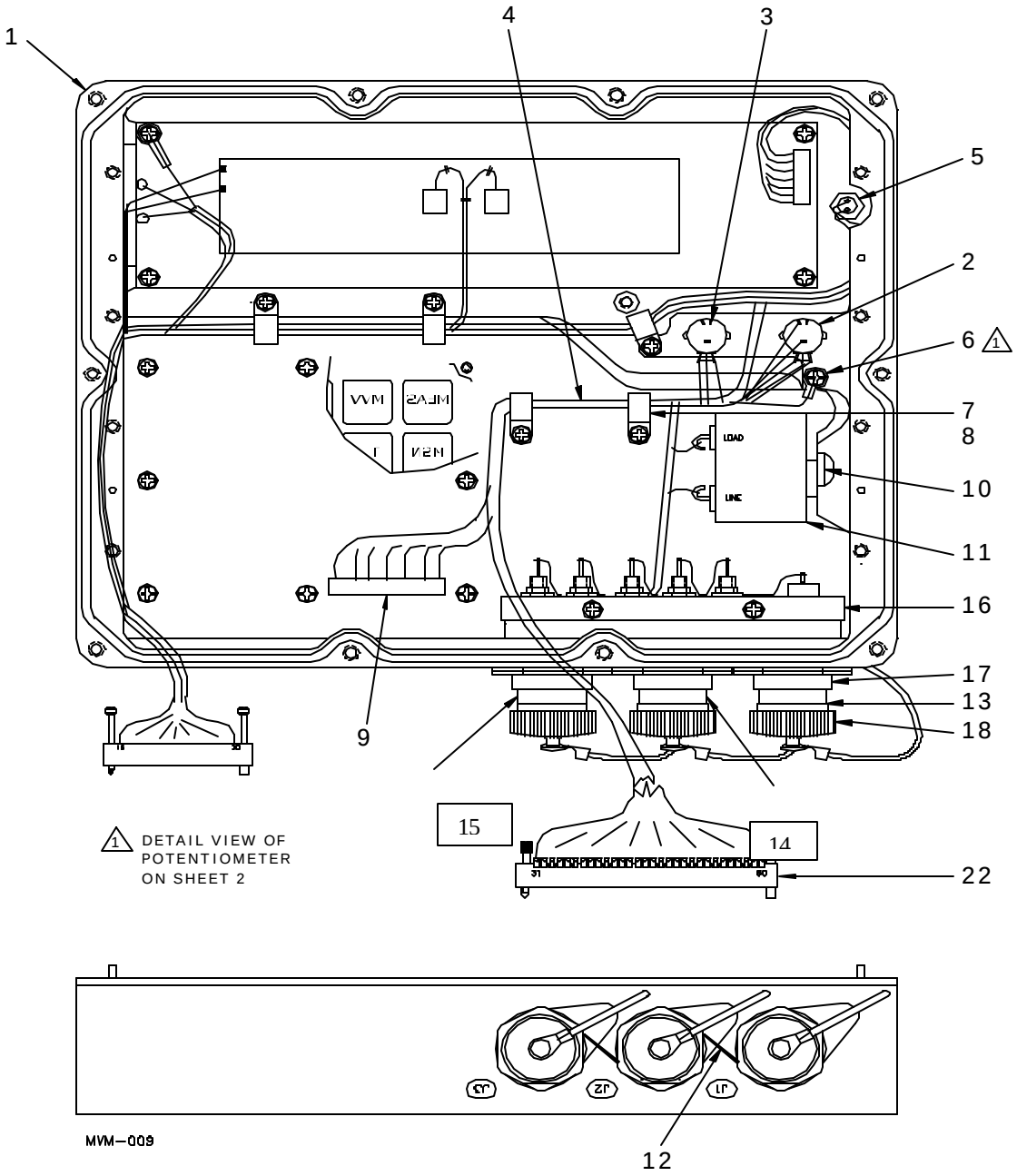

Figure 3-67. CPDU Front Panel Assy, P/N AY6706708-0 (Sheet 1 of 2)

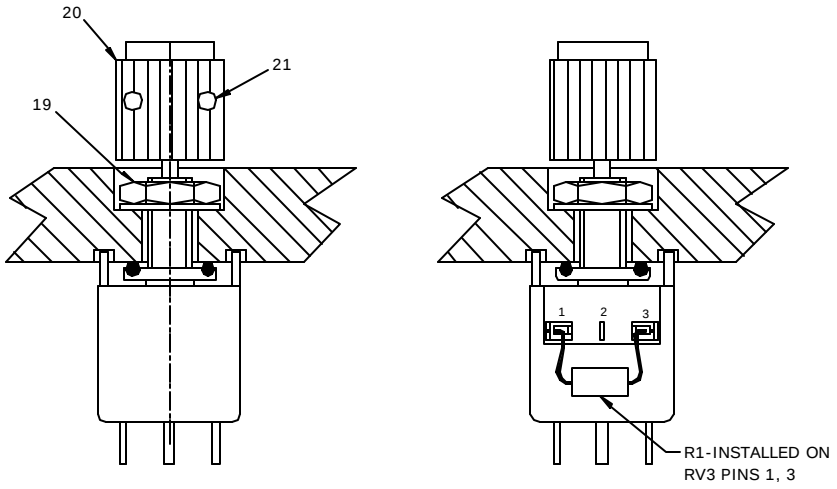

Figure 3-67. CPDU Front Panel Assy, P/N AY6706708-0 (Sheet 2 of 2)

3.18.6 Installation

Refer to Figure 3-67. Install Harness Assy as follows:

a. Insert EMI Module (16) to Front Panel Assy (1).
b. Install connectors J1 (13), J2 (14), and J3 (15) using three nuts (17).
c. Install dust cap (18) on connectors J1, J2, and J3.
d. Install ON/OFF switch (11) to Front Panel Assy using nut (10).
e. Connect Keyboard connector (9).
f. Install P clamps (8) using screws (7).
g. Fasten shield terminal screw (6) to Front Panel Assy.
h. Solder Harness to LED (5). Make sure to connect in the right polarity.
i. Install DIM potentiometer (2) and CONT potentiometer (3).
j. Fasten DIM and CONT potentiometer nuts (19).
k. Fasten DIM and CONT potentiometer knobs (20) using two hex key screws (21).
l. Apply safety wire (12) to three nuts (17) at connectors J1 (13), J2 (14), and J3 (15).

3.18.7 Replacement

Refer to Figure 3-67. Replace components of Harness Assy as follows:

3.18.7.1 Keyboard Connector

a. Carefully cut heat shrink sleeve.
b. Tag all wires.
c. Cut all wires.
d. Slide new heat shrink sleeve on wires.
e. Replace keyboard connector (9).
f. Solder wires to connector.
g. Remove tags.
h. Shrink heat shrink sleeve using heat gun.

3.18.7.2 EMI Module

a. Tag all wires.
b. Unsolder wire from EMI Module (16).
c. Replace EMI Module.
d. Solder wires to EMI Module according to labels.

3.18.7.3 Connector P4.

a. Tag all wires.
b. Cut insulating sleeve.
c. Unsolder wires from connector P4 (22).
d. Slide new insulating sleeve on wires.
e. Replace connector P4.
f. Solder wires to connector P4.
g. Remove tags.
h. Shrink insulating sleeve using heat gun.

3.18.7.4 Circuit Breaker SW1

a. Remove insulating sleeve from switch terminals.
b. Unsolder wires from ON/OFF switch (11).
c. Slide new insulating sleeve on wires.
d. Replace switch.
e. Solder wires to switch.
f. Shrink insulating sleeve using heat gun.

3.18.7.5 DIM Potentiometer/CONT Potentiometer

a. Tag all wires.
b. Cut insulating sleeve.
c. Unsolder wires from potentiometer (2/3).
d. Slide new insulating sleeve on wires.
e. Replace potentiometer.
f. Solder wires to potentiometer.

NOTE

For DIM Potentiometer, install R1 between pins 1-3.

g. Remove tags.
h. Shrink insulating sleeve using heat gun.

3.18.8 Inspection

a. Inspect all parts for damage, wear, and deterioration.
b. Inspect all wiring for bent or broken leads; cracked, frayed, deteriorated, worn, overheated, or burned insulation and security of attachment.
c. Inspect connectors for broken, bent, recessed, loose, damaged or missing pins.
d. Inspect all panel-mounted parts for damage, wear and deterioration.

3.18.9 Fault Isolation

Refer to Figure 3-68.

3.18.9.1 Keyboard Connector

a. Inspect wiring resistance according to Table 3-51.
b. If continuity test failed, cut insulating sleeve and check continuity at the fault wiring.
c. If wiring is faulty, replace wire.
d. If wiring is ok, replace keyboard connector.

Table 3-51. Keyboard Connector Resistance Test

From	To	Accepted Resistance
J4/1	J1/5	Less than 0.5 Ω
J4/9	J1/2	Less than 0.5 Ω
J4/25	J1/14	Less than 0.5 Ω
J4/34	J1/3	Less than 0.5 Ω
J4/39	J1/4	Less than 0.5 Ω
J4/40	J1/10	Less than 0.5 Ω
J4/42	J1/9	Less than 0.5 Ω
J4/47	J1/15	Less than 0.5 Ω
J4/51	J1/1	Less than 0.5 Ω
J4/52	J1/12	Less than 0.5 Ω
J4/53	J1/13	Less than 0.5 Ω

3.18.9.2 LED

Check LED on panel using DMM diode mode.

a. Connect J4/38 to (+) of DMM and J4 (19) to (-) of DMM.
b. Verify measured resistance is 0.4 - 0.8 KΩ.
c. If not, replace LED.
d. Test wiring continuity as follows:
    1. From anode wire to J4/38.
    2. From cathode wire to J4/19.
e. If measured resistance of steps d1. and d2. is above 0.5 Ω, the replace wire.

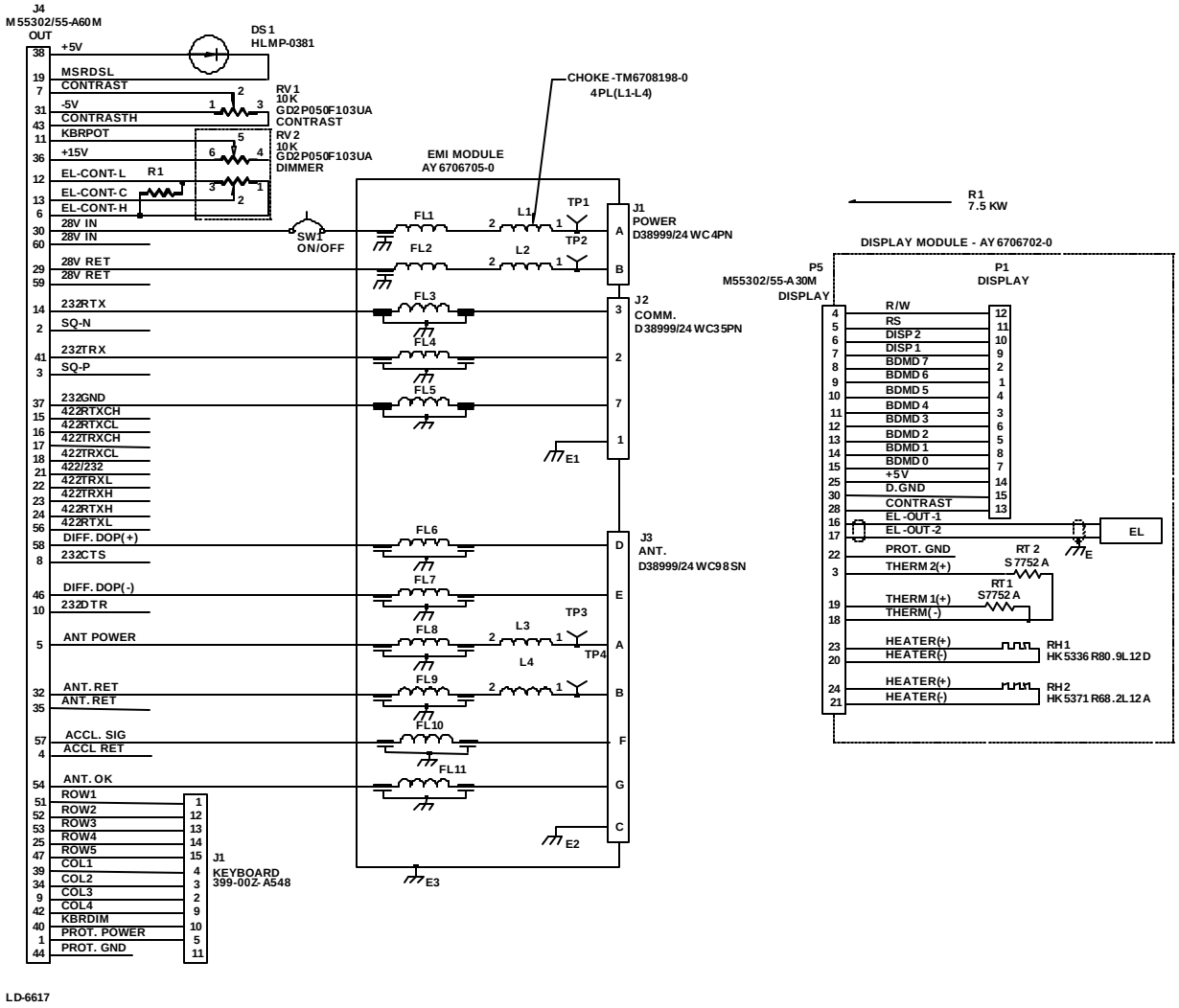

Figure 3-68. Harness, P/N WA6706707-0, Schematic Diagram

3.18.9.3 CONT Potentiometer

a. Check resistance between J4/31 and J4/43.

b. Verify measured resistance is 10 KΩ±1 KΩ.

c. If not, replace potentiometer.

d. Check resistance between J4/31 and J4/7. Rotate potentiometer fully CW and fully CCW.

e. Verify resistance is varied between 0 +1 KΩ to 10 KΩ±1 KΩ.

f. If not, replace potentiometer.

g. Check wiring continuity from potentiometer pins to J4 pins according to **Figure 3-68.** Replace wire if necessary.

3.18.9.4 DIM Potentiometer

a. Check wiring resistance IAW Table 3-52.

b. If continuity test fails, replace faulty wiring.

c. Check resistance between J4/12 and J4/6.

d. Verify measured resistance is 4.29 KΩ±0.5 KΩ.

e. If not, replace R1 or potentiometer.

f. Check resistance between J4/11 and J4/36. Rotate potentiometer fully CW and fully CCW.

g. Verify resistance varies between 0 +0.5 KΩ to 10 K±1 KΩ.

h. If not, replace potentiometer.

i. Check resistance between J4/13 and J4/6. Rotate potentiometer fully CΩ and fully CCW.

j. Verify resistance varies between 0 +0.5 KΩ to 4.29 KΩ±0.5 KΩ.

k. If not, replace potentiometer.

Table 3-52. DIM Potentiometer Continuity Test

From	To	Accepted Resistance
J4/6	RV2/3	Less than 0.5 Ω
J4/11	RV2/5	Less than 0.5 Ω
J4/12	RV2/1	Less than 0.5 Ω
J4/13	RV2/2	Less than 0.5 Ω
J4/36	RV2/6	Less than 0.5 Ω

3.18.9.5 EMI Module

a. Check wiring IAW Table 3-53.

b. If failure is found, check specific wire from the filter to the correct pin in J4.

c. If failure is found, replace wire.

d. If not, troubleshoot EMI Module IAW procedures in Section VI of this Chapter.

Table 3-53. EMI Module Continuity Test

From	To	Accepted Resistance
J1/A	J4/30	Less than 0.5 Ω
J1/B	J4/29	Less than 0.5 Ω
J2/2	J4/41	Less than 0.5 Ω
J2/3	J4/14	Less than 0.5 Ω
J2/7	J4/37	Less than 0.5 Ω
J3/A	J4/5	Less than 0.5 Ω
J3/B	J4/32	Less than 0.5 Ω
J3/D	J4/58	Less than 0.5 Ω
J3/E	J4/46	Less than 0.5 Ω
J3/F	J4/57	Less than 0.5 Ω
J3/G	J4/54	Less than 0.5 Ω

SECTION XIX. CABLE DRUM, P/N AM6707950-0

SECTION CONTENTS

		Page
3.19	CABLE DRUM, P/N AM6707950-0	3-185
3.19.1	GENERAL	3-185
3.19.2	TEST EQUIPMENT AND SPECIAL TOOLS REQUIRED	3-185
3.19.3	MATERIALS REQUIRED	3-186
3.19.4	GENERAL REPAIR PROCEDURES	3-186
3.19.5	DISASSEMBLY	3-186
3.19.6	ASSEMBLY	3-186
3.19.7	INSPECTION	3-188

3.19 CABLE DRUM, P/N AM6707950-0

3.19.1 General

The following paragraphs provide repair procedures and maintenance information for the Cable Drum, P/N AM6707950-0. Source, maintenance and recoverability codes are listed below:

U.S. Army	PAOOO
U.S. Marine Corps	PAOOO

3.19.2 Test Equipment and Special Tools Required

Special tools required are listed in Table 3-54. Unless otherwise specified, the special tools listed below will be used for repairing the Cable Drum. Each commercially available tool can be replaced by a tool equivalent to the one listed.

Table 3-54. Test Equipment and Special Tools Required

Nomenclature	Part/Spec. No.	Appendix C Figure 27 Item No.
Torque Wrench	TS30	6

3.19.3 Materials Required

Repair materials and other consumable item requirements are listed in Table 3-55.

Table 3-55. Materials Required

Nomenclature	Part/Spec. No.	Appendix F Item No.
Primer	747-55	17
Sealing Compound	83-31	16
Lint-Free Cloth	8722-0088	7

3.19.4 General Repair Procedures

Refer to Figure 3-69. The following general requirements apply to the repair of the Cable Drum.

a. Disassemble the Cable Drum only to the level required.
b. Welded parts shall be replaced as a complete assy.
c. Apply primer and locking compound to thread of screw.
d. Replace identification plate IAW procedure of para. 3.1.10.
e. Refinish damage painted surfaces IAW TM 43-0139 using forest green CARC color IAW FED-STD-595. For the U.S. Marine Corps, refer to TM 4750-15/1.
f. Do not use any cleaning solvent when cleaning the Drum bushing.

3.19.5 Disassembly

Refer to Figure 3-69.

3.19.5.1 Handle

a. Remove screw (1) washer (2) and handle (3).

3.19.5.2 Cable Reel Assy

a. Loosen screw (4).
b. Remove collar (5) and wavy washer (6).
c. Remove cable reel (7).
d. Remove brake lining (8).

3.19.6 Assembly

3.19.6.1 Handle

a. Insert screw (1) and washer (2) into handle (3).
b. Apply locking compound to thread.
c. Fasten screw (1) to cable reel (7).

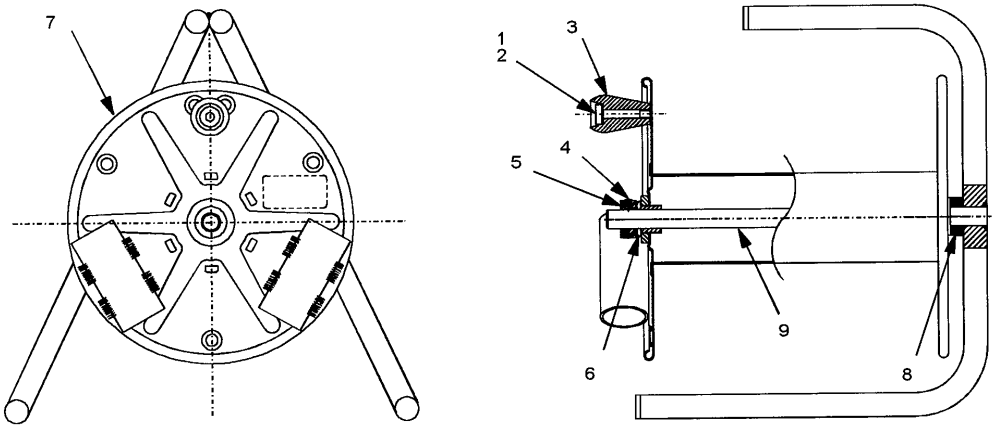

Figure 3-69. Cable Drum Assy, P/N AM6707950-0

3.19.6.2 Cable Reel Assy

a. Clean chassis shaft (9) using dry lint-free cloth.

b. Install brake lining (8) on chassis shaft (9).

c. Install cable reel (7) on chassis shaft (9).

d. Install wavy washer (6) and collar (5) on chassis shaft (9).

e. Apply locking compound to screw (4).

f. Slightly press collar (5) to compress wavy washer (11) approx. half way and tighten screw (4). Remove residue of locking compound.

3.19.7 Inspection

a. Verify that the cable reel is rotating smoothly and that brake lining prevents it from running freely.

b. Inspect all parts for security of attachment.

c. Inspect all parts for damage, wear and deterioration.

d. Inspect all parts for nicks, cracks, soaring, corrosion and broken welds.

e. Inspect painted surfaces for cracked, chipped, blistered or deteriorated paint film.

f. Inspect that identification label is secured to Cable Reel Assy.

SECTION XX. CARRYING CASE, P/N AM6706714-0

SECTION CONTENTS

		Page
3.20	CARRYING CASE, P/N AM6706714-0	3-189
3.20.1	GENERAL	3-189
3.20.2	TEST EQUIPMENT AND SPECIAL TOOLS REQUIRED	3-189
3.20.3	MATERIALS REQUIRED	3-190
3.20.4	GENERAL REPAIR REQUIREMENTS	3-190
3.20.5	DISASSEMBLY	3-190
3.20.6	ASSEMBLY	3-192

3.20 CARRYING CASE, P/N AM6706714-0

3.20.1 General

The following paragraphs provide repair procedures and maintenance information for the Carrying Case, P/N AM6706714-0. Source, maintenance and recoverability codes are listed below:

U.S. Army	PAOFF
U.S. Marine Corps	PAOFF

3.20.2 Test Equipment and Special Tools Required

Special tools required are listed in Table 3-56. Each commercially available tool can be replaced by a tool equivalent to the one listed.

Table 3-56. Test Equipment and Special Tools Required

Nomenclature	Part/Spec. No.	Appendix C Figure 27 Item No.
Electric Drill	Black & Decker, T1	16
Drill bits	Black & Decker, High Speed	17
Riveting Tool	Rivetek, Model K	20

3.20.3 Materials Required

Repair materials and other consumable item requirements are listed in Table 3-57.

Table 3-57. Materials Required

Nomenclature	Part/Spec. No.	Appendix F Item No.
Adhesive	RTV732 (clear)	34
Alcohol	TT-I-735A	4 and 24
Acid Brush	H-B-643	6
Methylethylketone	ASTM-D-740	14

3.20.4 General Repair Requirements

Refer to **Figure 3-70**. The following general requirements apply to the repair of the Carrying Case.

a. Apply RTV732 whenever a rivet is replaced. Before riveting, fill the hole in the Carrying Case wall with RTV732 until overflow using a thin nozzle.

b. Do not attempt to remove the foam inside the Carrying Case.

3.20.5 Disassembly

3.20.5.1 Latch, Strike, Handle or Name Plate

a. Choose a drill bit IAW rivet head size.

b. Carefully drill out rivet (3, 7, 11 or 13) head only. Do not break through.

c. Remove defective latch (4), strike (2), handle with plate (5/6) or Name Plate (10, 12).

3.20.5.2 Valve

a. Remove nut (8) holding valve (9) from the inside of Carrying Case.

b. Remove valve from Carrying Case.

3.20.5.3 Gasket Removal

a. Remove defective Gasket (1) from Carrying Case cover.

WARNING

Use RTV732 in well ventilated area. Prevent eye and skin contact. Avoid breathing vapors.

b. Remove any residue of RTV732 adhesive from Gasket groove using acid brush and clean lint-free cloth moistened with MEK.

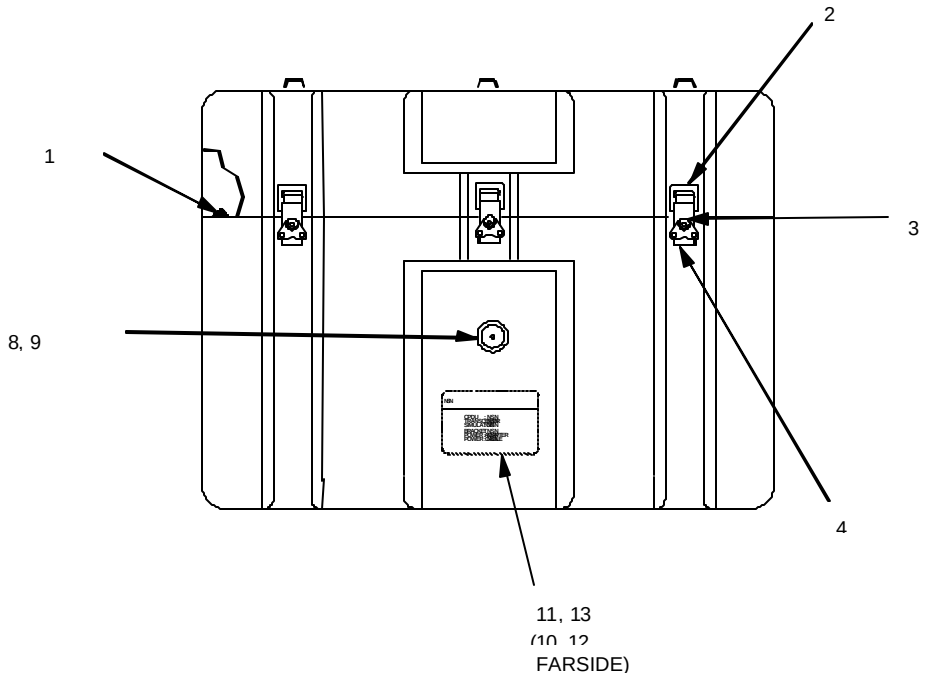

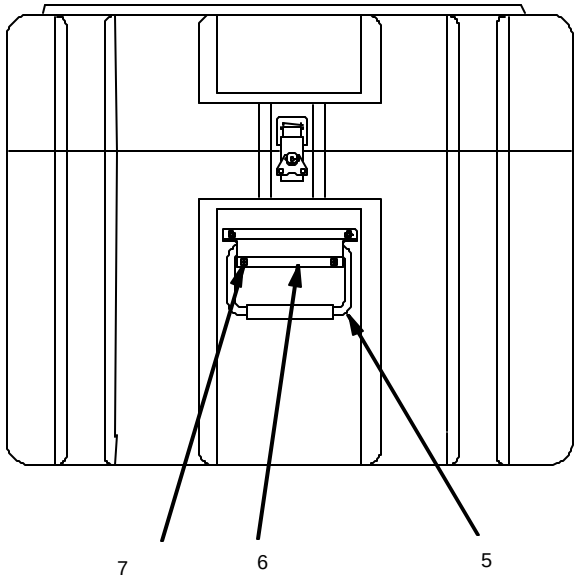

Figure 3-70. Carrying Case P/N AM6706714-0

3.20.6 Assembly

3.20.6.1 Latch, Strike, Handle or Name Plate

a. Apply RTV732 to the rivet hole in the Carrying Case until overflow.
b. Place the latch (4) or strike (2) or handle (5/6) or Name Plate (10, 12) to its position.
c. Install latch (4), strike (2), or handle with plate (5/6) using rivets (3/7).
d. Install Name Plate (10, 12) using rivets (11, 13).

3.20.6.2 Valve

a. Position valve (9) into its position on Carrying Case wall.
b. Fasten valve nut (8) from the inside of the Carrying Case.

3.20.6.3 Gasket

a. Apply a thin layer of RTV732 to gasket groove on Carrying Case cover.
b. Place new Gasket (1) into groove and press until the Gasket “latches" into the groove.
c. Remove and clean residue of RTV732.
d. Set DMM to RESISTANCE mode.

CHAPTER 4

REPROGRAMMING

CHAPTER CONTENTS

		Page
4.1	GENERAL	4-2
4.2	REPROGRAMMING	4-3
4.2.1	REPROGRAMMING SET-UP	4-3
4.2.2	REQUIRED EQUIPMENT	4-3
4.3	UTILITY SOFTWARE	4-7
4.3.1	UTILITY SOFTWARE CD	4-7
4.3.2	CD CONTENTS	4-7
4.3.3	CD DIRECTORY STRUCTURE	4-7
4.3.4	ROOT DIRECTORY	4-7
4.3.5	SOURCES AND DISTRIBUTION SUBDIRECTORIES	4-8
4.3.6	DISTRIBUTION UTILITY DIRECTORY	4-8
4.3.7	SOURCE UTILITY DIRECTORY	4-8
4.4	M94 UPLOAD/DOWNLOAD P/N PF67012423	4-9
4.4.1	GENERAL DESCRIPTION	4-9
4.4.2	PROGRAM COMPONENTS AND CONFIGURATION	4-10
4.4.3	APPLICABLE DOCUMENTS	4-10
4.4.4	OPERATION INSTRUCTIONS	4-10
4.5	M94 MVV EDITOR P/N PF67012424	4-15
4.5.1	GENERAL DESCRIPTION	4-15
4.5.2	PROGRAM COMPONENTS AND CONFIGURATION	4-16
4.5.3	APPLICABLE DOCUMENTS	4-16
4.5.4	OPERATION INSTRUCTIONS	4-17
4.6	M94 FCI DATABASE EDITOR P/N PF67012425	4-28
4.6.1	GENERAL DESCRIPTION	4-28
4.6.2	PROGRAM COMPONENTS AND CONFIGURATION	4-29
4.6.3	APPLICABLE DOCUMENTS	4-29

4.6.4 NOMENCLATURE AND PARAMETERS....4-29
4.6.5 DATA RANGES AND LIMITATIONS....4-31
4.6.6 OPERATION INSTRUCTIONS....4-33
4.7 M94 REMOTE CONTROL P/N PF67012426....4-44
4.7.1 GENERAL DESCRIPTION....4-44
4.7.2 PROGRAM COMPONENTS....4-44
4.7.3 APPLICABLE DOCUMENTS....4-44
4.7.4 OPERATION INSTRUCTIONS....4-45

4.1 GENERAL

This chapter describes procedures required for reprogramming the M94 MVS and erasing the MVV data base. The CPDU contains electrically erasable programmable read-only memory (EEPROM). If this memory content is corrupted or erased, it can be reprogrammed using the serial communication port. Reprogramming of the CPDU is authorized at the direct support, general support, and depot levels of maintenance.

4.2 REPROGRAMMING

4.2.1 Reprogramming Set-up

Connect the CPDU as described in Figure 4-1.

4.2.2 Required Equipment

Characteristic	Requirements
Computer Type	IBM PC or compatible
CPU	386 (or above)
Clock Speed	16 MHz
RAM	640 K
Hard Disk	5 MB free space
Floppy Disk Drive	3.5 inch, 1.44M
Serial Port	Configured as COM1 or COM2
Conventional Communication Cable (Figure 4-2)	RSL, P/N WA6708180-0
MS-DOS Version	6.2 (or higher version)
Application Software Diskette	RSL, P/N RD6708181-0
Power Cable (Figure 4-3)	RSL, P/N WA6709092-0
DC Power Supply	30 Vdc 3A

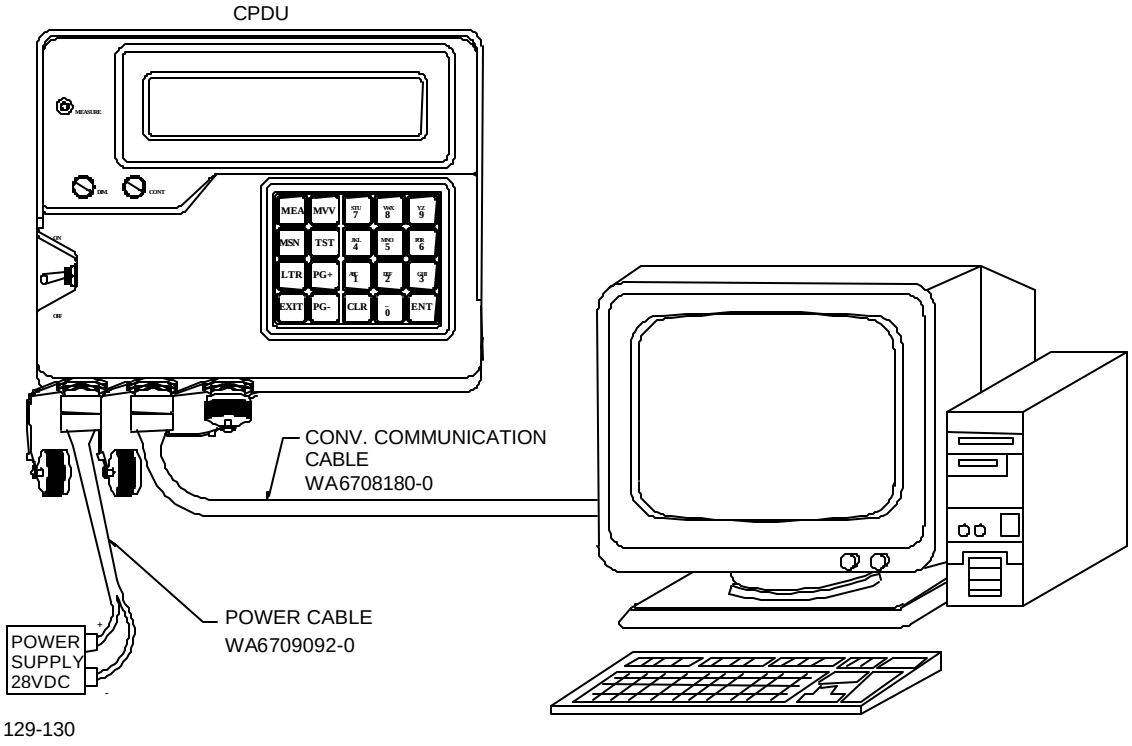

Figure 4-1. CPDU Reprogramming Set-up

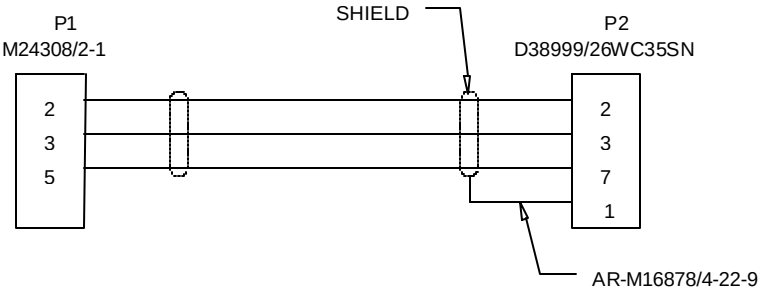

SCHEMATIC
DIAGRAM

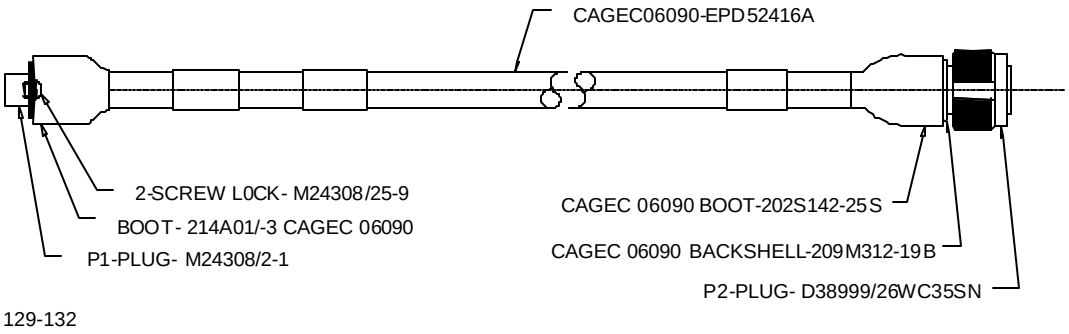

129-132

Figure 4-2. Conventional Communication Cable, P/N WA6708180-0

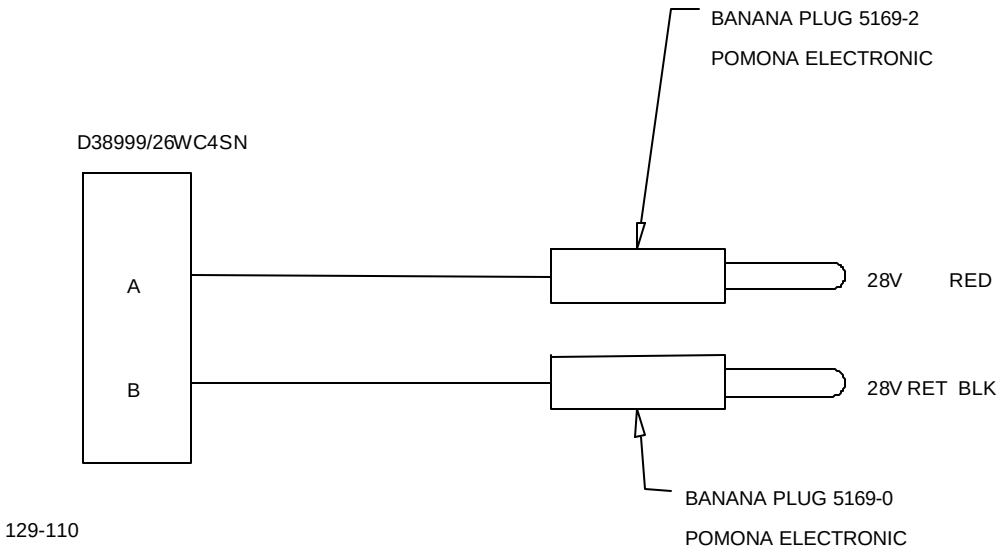

Figure 4-3. Power Cable, P/N WA6709092-0

4.3 UTILITY SOFTWARE

No.	Utility	Program Name	RSL Number
1	M94 Upload/Download	PCREMPR.EXE	PF67012423
2	M94 MVV Editor	MVV.EXE	PF67012424
3	M94 FCI Database Editor	FCI.EXE	PF67012424
4	M94 Remote Control	PCREMCON.EXE	PF67012426
5	MCA Communication	PCMCA.EXE	PF67012427
6	MCA-BCS Correlation Table Editor	MCAEDIT.EXE	PF67012428

NOTE

Item 5 and 6 are provided in Appendix H.4.

4.3.1 Utility Software CD

All the utilities' software are provided on CD, P/N CM67013249, M94 Utilities.

4.3.2 CD Contents

The CD contains the required software sources, executable files and user manuals. The data has been separated in two main parts:

a. All deliverable items according to the contract,

b. All the items required to make distribution diskettes.

Although some components appear in both parts, it makes the task of finding the needed items very easy, thus avoiding sending utility programs to unauthorized parties (i.e. the FCI database editor for the M94 should not be available to all, but to one central location).

4.3.3 CD Directory Structure

The following figures show the directory structure of both parts of the CD.

4.3.4 Root Directory

The data is separated in two parts: sources and distribution.

The sources subdirectory contains all the software code, the executable file and the user manual for each of the programs. The distribution diskettes subdirectory contains the executable file, the user manual and any required additional file for operator use (i.e. for the FCI editor, the current version of database file is attached).

4.3.5 Sources and Distribution Subdirectories

Both subdirectories are similar. Each one is further divided into separate directory for each utility.

4.3.6 Distribution Utility Directory

The distribution portion for each utility contains only the information needed at the user level. This includes the user level. This includes the user manual, executable file and any additional file required in conjunction with the software.

4.3.7 Source Utility Directory

The source portion for each utility contains all the files needed for future software changes. This includes all source code files, executable file, the user manual.

4.4 M94 UPLOAD/DOWNLOAD P/N PF67012423

4.4.1 General Description

4.4.1.1 Purpose

The purpose of the program is to access the M94 Muzzle Velocity System (MVS) internal data through communications. The FCI data and the stored MVV data can be extracted (uploaded) to a computer for viewing, editing or printing. The M94 can be updated with new FCI data or fed with MVV data previously downloaded.

The MVV data is of utmost importance for target acquisition with either the FCI tables or Fire Control System (FCS). An additional aspect is for gun maintenance and tube wear tracing.

Using the MVV editor it is possible to maintain a record of each gun's calibration data, as well as entering data to the M94 from the battery log books. It is also important to keep this data in file form, in case the M94 needs to be replaced with a new one.

The M94 FCI MVV editor PF67012424 is a utility program used for viewing, editing or printing the extracted data.

The M94 FCI MVV editor PF67012424 is a utility program used for viewing, editing or printing the extracted data.

The M94 FCI data base editor PF67012425 is a utility program used for viewing, editing or printing the extracted data.

The M94 Upload/Download program is a utility that runs on a PC compatible computer, under the Windows 95 operating system.

4.4.1.2 Capabilities

4.4.1.2.1 Communication

This program communicates between a PC compatible computer, running on Windows 95, and the M94 CPDU unit.

The connection is achieved using the M94 computer cable.

Communication parameters are:

a. RS232

b. BAUD rate: 9600 bits/sec

c. 8 bits

d. Parity - none

e. Stop bit -1

4.4.1.2.2 Download (PC to M94) of FCI Data File

Updates the internal FCI database in the M94, used in pop-up menus for selecting Mission Data and computing MVVs.

When a new FCI database is downloaded, the program will automatically upload to file the existing FCI and all the MVV data stored in the M94. Then, after downloading the new FCI data, the MVV files are processed and linked to the FCI . Finally the processed MVV data is downloaded to the M94.

4.4.1.2.3 Upload (M94 to PC) Stored MVV Data and Save to File

All stored data is saved for use with the MVV Editor utility, or for downloading the existing data into a new system.

4.4.1.2.4 Upload the Existing FCI Table from the M94 to a File

This feature is important for the MVV Editor use. When editing MVV data, it must be done in respect to the existing FCI data. This is especially important when looking at archives of data.

4.4.1.2.5 Download MVV Data from File to the M94

By downloading an MVV data file, the M94 can be updated with relevant MVVs that concern the specific battery while clearing other existing data.

Some of the different uses would be:

When moving the M94 between batteries, the data file could contain MVV from a given battery and clear all old data from a different battery. This file was either uploaded from a different system, or prepared with the MVV Editor.

At the maintenance shop, the memory in a M94, after repair should be cleared by downloading null data.

4.4.2 Program Components and Configuration

4.4.2.1 Program Name

The program file name is: PCREMPR.EXE

RSL Number	Length	Date	Version
PF67012423	320512	07/07/1999	1.0

4.4.2.2 Additional File Needed

4.4.2.2.1 For Downloading M94 FCI Data File

It is required to have the correct version of the M94 data base file.

4.4.2.2.2 For Downloading MVV Data File

It is required to have the correct version of the MVV data file related to the M94 FCI data base in use.

This data file was previously extracted from a M94, or created/edited using the “M94 MVV editor” program - PF67012424.

4.4.2.2.3 For Uploading M94 FCI Data or MVV Data to a File

When receiving either MVV data or FCI database, no other data files are required.

4.4.3 Applicable Documents

ARMY TM 9-1290-364-14&P, (MARINE CORPS TM -9814A-14&P)
Conventional Muzzle Velocity System M94.

PF67012425 - FCI data base editor user guide.

PF67012424 - M94 MVV Editor user guide.

4.4.4 Operation Instructions

4.4.4.1 General Comments

The program is based and runs under the Windows 95 operating system therefore it inherits many Win95 standard functions such as mouse and keyboard movements, icons for operations, open and save file dialogues and so on.

It is assumed that the operator is familiar with these functions therefore it will not be covered in this manual.

4.4.4.2 Running the Program

Run the M94 Upload/Download by simply double clicking the program icon.

The following screen will appear:

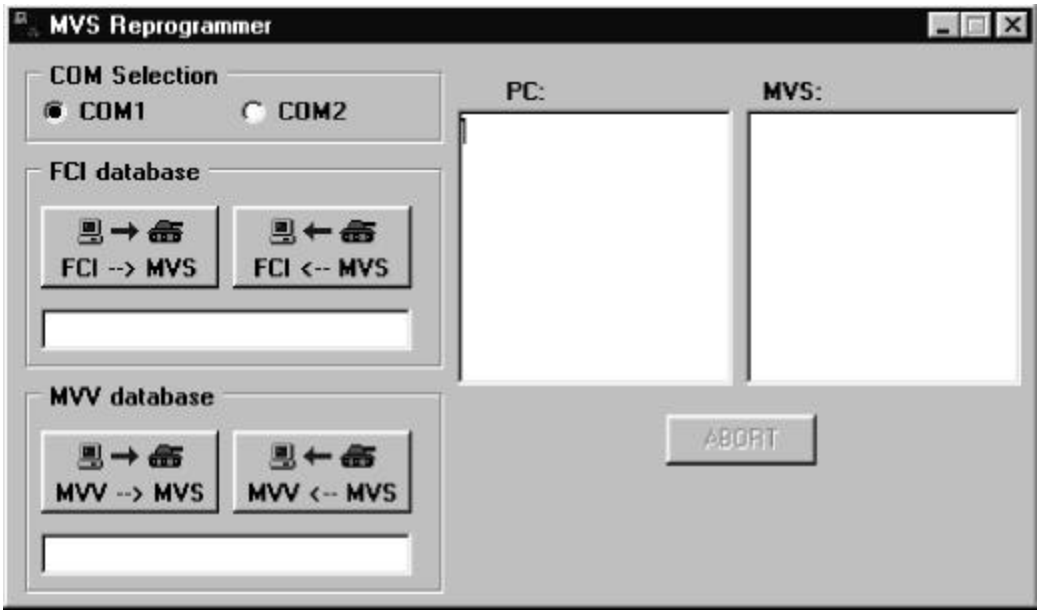

Configure the correct serial communications port in your computer by selecting COM1 or COM2.

4.4.4.3 Download (PC to M94) of FCI Data File

NOTE

The MVV data stored in the M94 is related to the current version of FCI data by pointers to data locations in the table. When updating the FCI data in the M94, it is important to update the links and pointers of existing MVV data unless this data is erased.

The FCI download procedure automatically performs the following steps:

a. Upload the current FCI from the M94 to a file.

b. Upload the MVV data to a file.

c. Download the new FCI data to the M94.

d. Process the MVV data according to the new FCI data.

e. Download the processed MVV data to the M94.

4.4.4.3.1 Click the FCI to MVS icon in the “FCI database window”.

The standard Win95 open-file dialogue will appear. Find and select the correct version of the M94 FCI data base file.

4.4.4.3.2 Once the new FCI data file is selected, the following reminder will show.

WARNING

Selecting NO will result in loosing all stored MVV data, unless previously uploaded.

4.4.4.3.3 If the M94 has no stored MVVs, or the data in the M94 has been already saved and the existing MVVs should be erased, press NO and proceed to Para 4.4.4.3.10.

4.4.4.3.4 Press YES to retain the MVV data in the M94. The following screen will appear.

4.4.4.3.5 Clicking the OK icon will reveal a standard Win95 save-file dialogue. Select the name and directory under which the current FCI file will be saved.

4.4.4.3.6 The communication between the computer and M94 will initiate and the current FCI data will be uploaded to the specified file.

4.4.4.3.7 Once the FCI data is saved, the user will be prompted to specify a filename for the existing MVV data.

4.4.4.3.8 Clicking the OK icon will reveal a standard Win95 save-file dialogue. Select the name and directory under which the current MVV data will be saved.

4.4.4.3.9 The communication between the computer and M94 will initiate and the current MVV data will be uploaded to the specified file.

4.4.4.3.10 The communication between the computer and M94 will initiate and the new FCI data will be downloaded to the M94.

4.4.4.3.11 The communication between the computer and M94 will initiate and the modified MVV data will be downloaded to the M94.

4.4.4.4 Upload the Existing FCI Table from the M94 to a File

4.4.4.4.1 Click the MVS to FCI icon in the “FCI database window”.

The standard Win95 save-file dialogue will appear. Select the name and directory under which the current FCI data will be saved.

4.4.4.4.2 The communication between the computer and M94 will initiate and the current FCI data will be uploaded to the specified file.

4.4.4.5 Download MVV Data from File to the M94

4.4.4.5.1 Click the MVV to MVS icon in the “MVV database window”.

The standard Win95 open-file dialogue will appear. Select the name and directory of the current MVV data to be downloaded.

4.4.4.5.2 The communication between the computer and M94 will initiate and the current MVV data will be downloaded to the MVS.

4.4.4.6 Upload (M94 to PC) stored MVV data and save to file

4.4.4.6.1 Click the MVS to MVV icon in the “MVV database window”.

The standard Win95 save-file dialogue will appear. Select the name and directory under which the current MVV data will be saved.

4.4.4.6.2 The communication between the computer and M94 will initiate and the current MVV data will be uploaded to the specified file.

4.5 M94 MVV EDITOR P/N PF67012424

4.5.1 General Description

4.5.1.1 Purpose

The purpose of the program is to easily access the MVV data previously extracted from a M94 Muzzle Velocity System (MVS) for viewing, editing and printing.

The MVV data is of outmost importance for target acquisition with either the FCI tables or Fire Control System (FCS). An additional aspect is for gun maintenance and tube wear tracing.

Using the MVV editor it is possible to maintain a record of each gun's calibration data, as well as entering data to the M94 from the battery log books. It is also important to keep this data in file form, in case the M94 needs to be replaced with a new one.

The MVV data stored in the M94 MVS is the calibrated Muzzle Velocity (MV) of all gun/projectile/charge/zone/lot combinations that were fired and measured by this particular M94.

Once the MVV data has been extracted to a file, this easy to use editor allows to inspect existing data, obtain a hardcopy for reference ,edit existing data, introduce new MVV data, or delete obsolete records, according to the FCI tables.

Edited files are saved in a format ready to be loaded into the M94 using the "M94 Upload /Download" program - PF67012423.

The M94 FCI data base editor is a utility program that runs on a PC compatible computer, under the Windows 95 operating system.

4.5.1.2 Capabilities

4.5.1.2.1 View all the stored MVV data from a given M94.

All the Mission information, as stored in the M94, is available in an easily accessed, and readable table form.

The table can be sorted by each of the different fields. Filters allow fast finding and viewing only specific data.

4.5.1.2.2 Edit MVV Data

Each entry in the table can be edited.

The data that can be changed is: Howitzer number, tube number, charge lot, date and MVV.

The data that can not be accessed is the ammo combination as appears in the FCI: gun type/projectile/charge/zone. This restriction prevents the user from entering a non-valid combination.

4.5.1.2.3 Delete MVV Data

Each entry in the table can be deleted.

This feature allows removing old data records that may confuse the operator such as records that were stored by a different battery, data stored during classroom training or maintenance etc.

4.5.1.2.4 Add MVV Data

New MVV records can be added to an existing MVV data file, or a new file can be created from scratch. The purpose of this utility is to enter MVV data that was generated by a different means other then a M94. This is especially useful when fielding a M94 to a battery for the first time.

4.5.1.2.5 Hardcopy

The MVV data can be directly printed to an existing printer, or saved to a file in Microsoft Excel readable format, for further processing.

4.5.1.2.6 Save MVV Data

Edited files are saved in a format ready to be loaded into the M94 using the “M94 Upload /Download” program - PF67012423.

4.5.2 Program Components and Configuration

4.5.2.1 Program Name

The program name is: MVV.EXE

RSL Number	Length	Date	Version
PF67012423	379904	25/11/1998	1.0

4.5.2.2 Additional File Needed

4.5.2.2.1 M94 FCI Data File

The MVV data is stored in a packed format that consists of pointers to the M94 FCI data file.

It is required to have the correct version of the M94 data base file related to the MVV data in use. For this purpose use the M94 data base file either from the archives of by extracting the data from the M94 MVS using the “M94 Upload /Download” program - PF67012423.

4.5.2.2.2 MVV File

This data file was previously extracted from a M94 using the “M94 Upload /Download” program - PF67012423.

When creating a new MVV data file, no previous data is required.

4.5.3 Applicable Documents

ARMY TM 9-1290-364-14&P,(MARINE CORPS TM -9814A-14&P)
Conventional Muzzle Velocity System M94.

4.5.4 Operation Instructions

4.5.4.1 General Comments

The program is based and runs under the Windows 95 operating system therefore it inherits many Win95 standard functions such as mouse and keyboard movements, icons for operations, open and save file dialogues and so on.

It is assumed that the operator is familiar with these functions therefore it will not be covered in this manual.

4.5.4.2 Running the Program

Run the M94 MVV editor by simply double clicking the program icon.

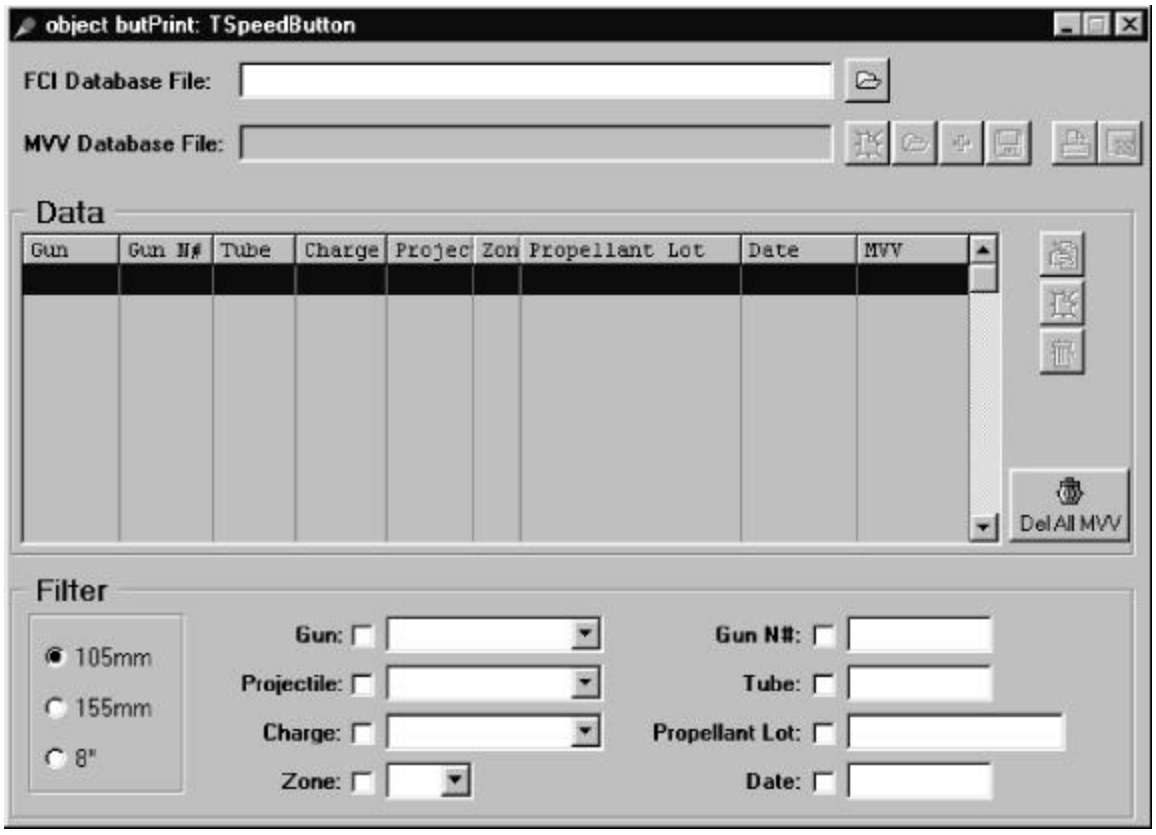

The following screen will appear:

4.5.4.3 Open a FCI Database File

Click the “open” icon opposite the “FCI database file” window to reveal the open-file dialogue. Find and select the correct version of the M94 FCI data base file related to the MVV data in use.

Once a FCI data is loaded the program allows access to all the other functions. Now it is possible to create a new MVV file or edit existing data.

4.5.4.4 Create a New MVV File

Once a FCI data is loaded the program allows access to all the other functions. Now it is possible to create a new MVV file or edit existing data. Enter new MVV data as described in Para 4.8.

4.5.4.5 Open a MVV Data File

Click the “open” icon opposite the “MVV database file” window to reveal the open-file dialogue. Find and select the M94 MVV data file.

4.5.4.6 View MVV Data

4.5.4.6.1 Once the MVV file is selected, the information will immediately be available for editing, deleting or adding new information.

In the following screen some data has been added for clarity. In this example the FCI file is Pf9256.bin and the MVV file is test.bin.

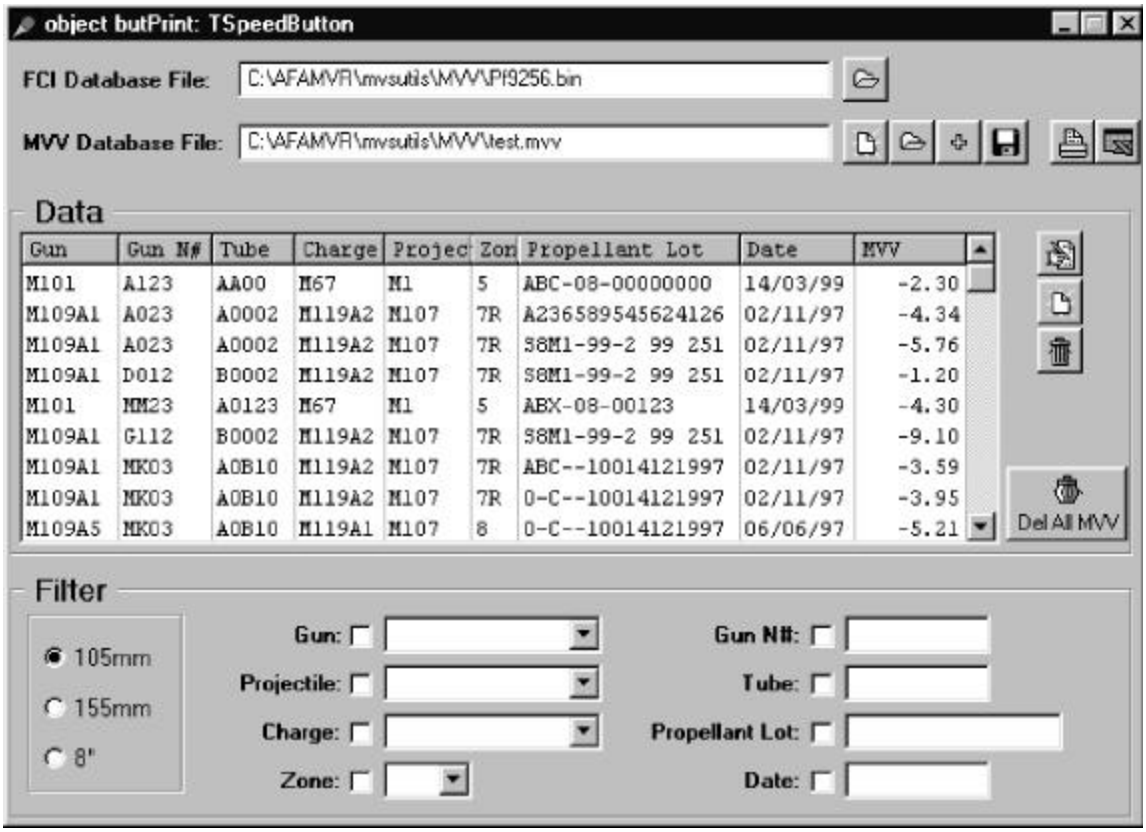

Note that the MVV data is illustrative and not necessarily correct.

4.5.4.6.2 Understanding the MVV screen:

The data is shown is a tabulated form. Each line represents one MVV for the given mission combination.

4.5.4.6.3 Browsing Through Data

The software provides the capability to browse through all the existing MVV data or sort and quick-find any given combination.

4.5.4.6.4 Sorting MVV Data

To sort the data in any one of the key fields(gun/ gun number/ tube/ projectile/ charge....) just click on the corresponding table header. In the following screen the sorting is according to gun number.

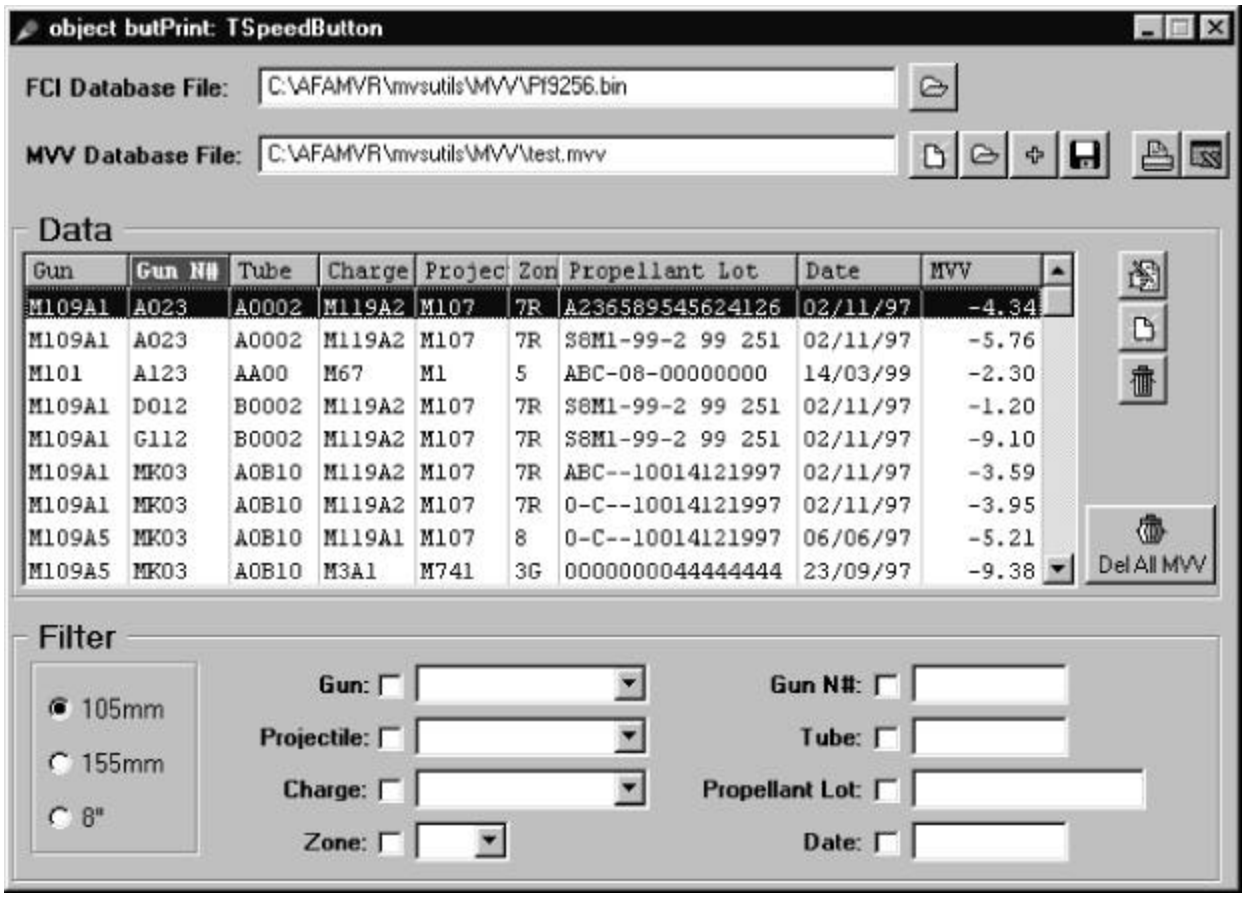

4.5.4.6.5 Quick Find Specific Data

In the Filter section select one or more of the data categories to view that data only. In the following screen the filter is set to gun type M109A1. If , in addition, a filter selection of A023 in the Gun number field would result in displaying only the firs two entries in the screen.

To fast find a required combination, select both the gun and the projectile and additional data to reduce the displayed data to minimum.

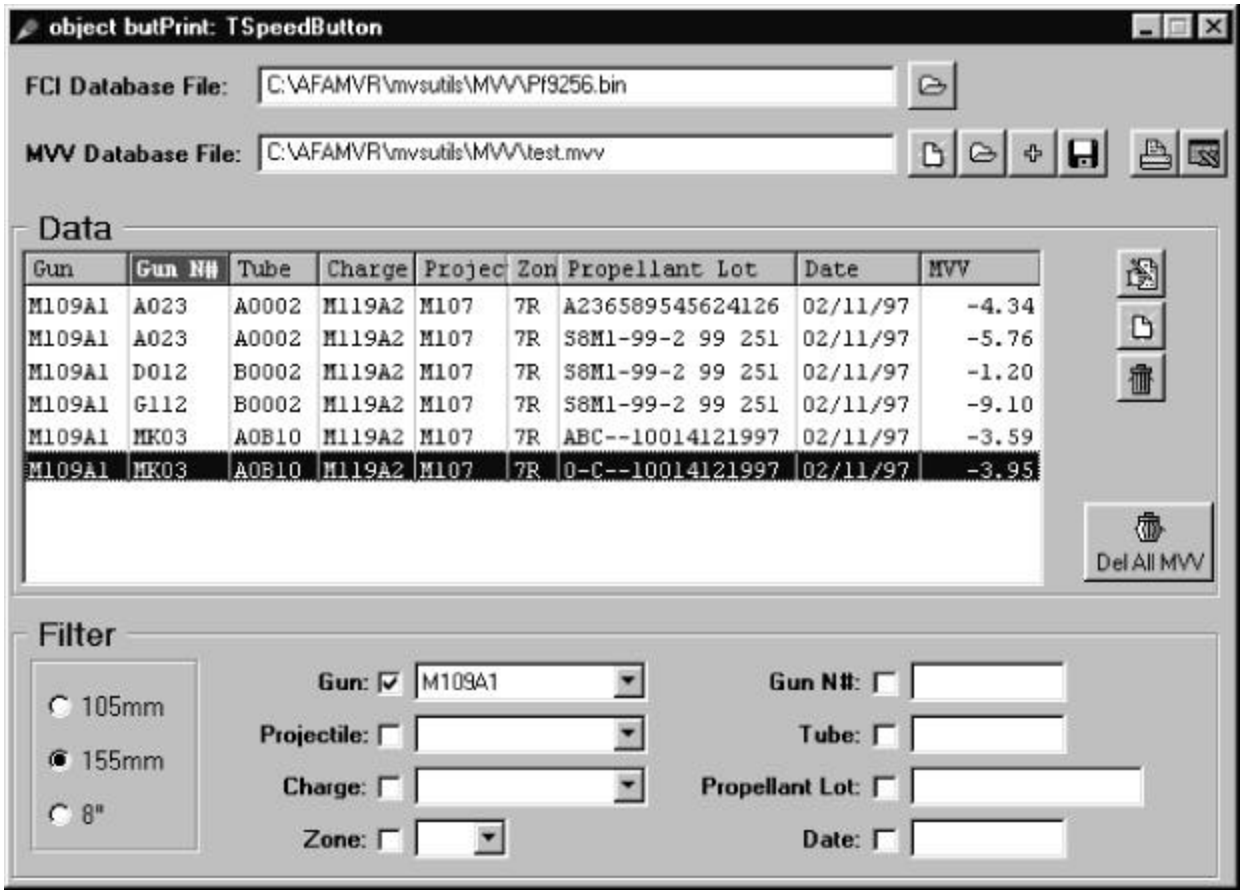

Filter selection restrictions:

The data is effectively separated into two types of data: valid ammunition combination and user defined data.

4.5.4.6.5.1 The valid ammunition combination data, as defined in the FCI , consists of Gun type, Projectile type, Charge type and zone. Selecting an item of this type is done by picking a value from a pop up list. Select a caliber category (105mm, 155mm, 8"), then select the required data for filtering.

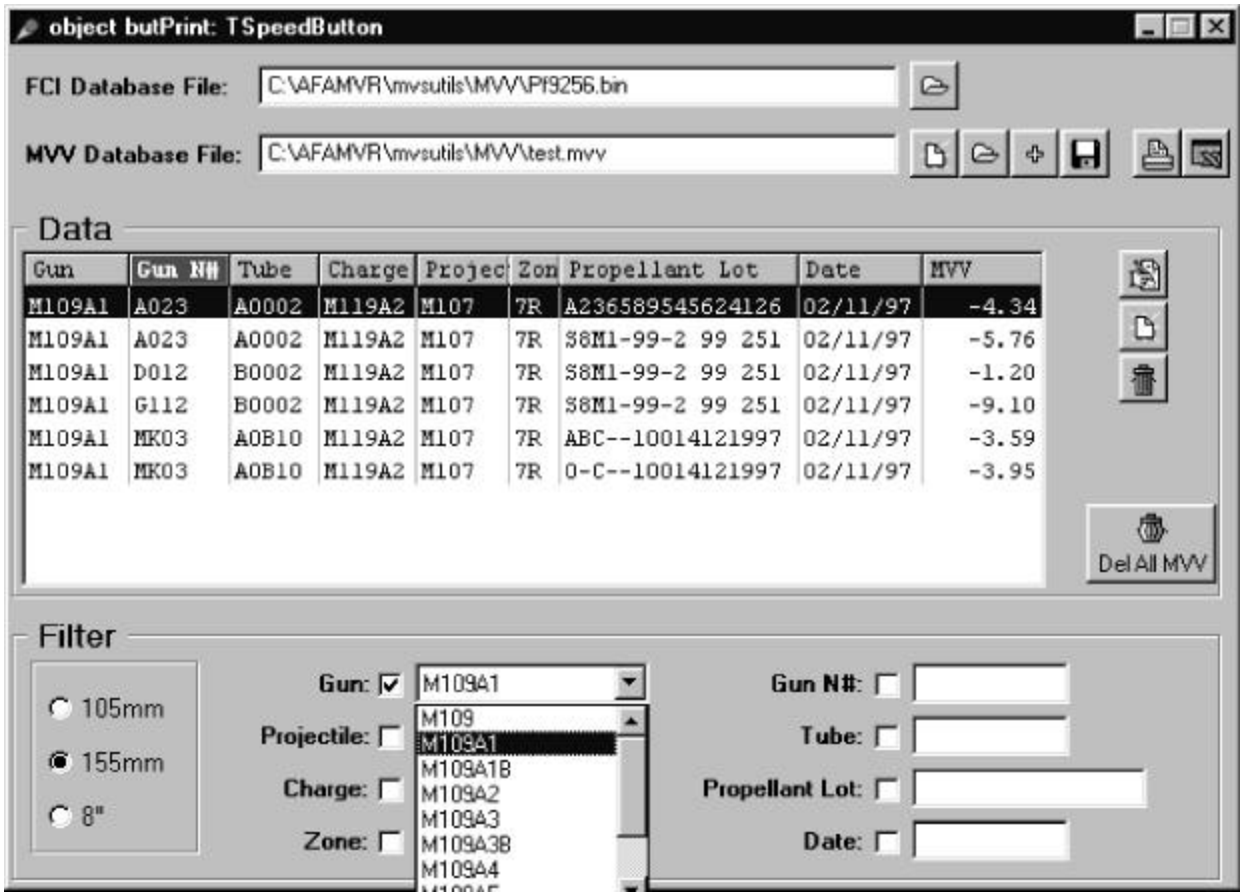

NOTE

The data is content sensitive. Data selection is restricted to the FCI valid ammunition combination. This also prevents user mistakes. For example**:** For 155mm, selecting the projectile check box will permit to pick any of the 155mm projectiles, while if the gun type was selected (i.e. M109A1) then only projectiles that can be used with this gun can be selected.

4.5.4.6.5.2 The user defined data consists of Gun number, Tube number, Lot number and Date. Selecting an item of this type is done by entering an alpha-numeric string or a part of it.

For example, entering ABC in the lot number filter field will result in displaying.

Data

Gun	Gun N#	Tube	Charge	Projec	Zon	Propellant Lot	Date	MVV
M101	A123	AA00	M67	M1	5	ABC-08-00000000	14/03/99	-2.30
M109A1	MK03	A0B10	M119A2	M107	7R	ABC--10014121997	02/11/97	-3.59

4.5.4.7 Edit MVV Data

To edit existing MVV data select the MVV data line and click the “edit” icon The edit window will appear.

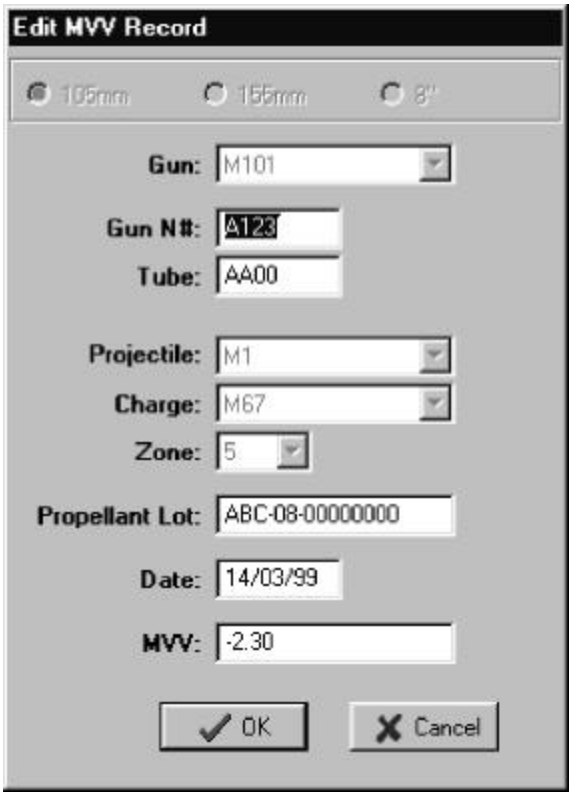

NOTE

When editing data, it is possible to change only the user defined data: Gun number, Tube number, Lot number, Date and MVV. The valid ammunition combination data, as defined in the FCI , consisting of Gun type, Projectile type, Charge type and zone can not be changed, to avoid user errors.

To change the combination data it is required to create a new MVV data record as described in Para 4.5.4.8.

Change the required data and then confirm by clicking the “ok” icon.

4.5.4.8 Adding MVV Data

4.5.4.8.1 To create a new MVV data click the “new” icon.

The new MVV record window will appear.

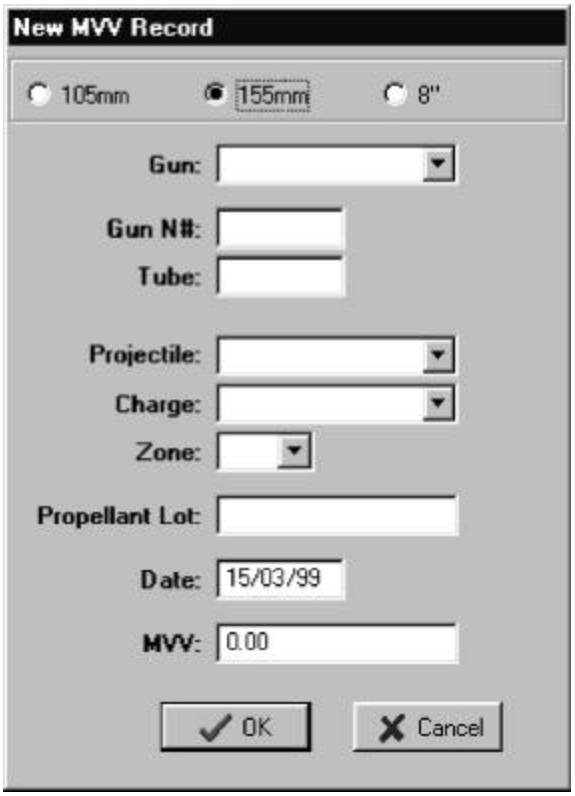

4.5.4.8.2 Data Entry Restrictions

The data is effectively separated into two types of data: valid ammunition combination and user defined data.

4.5.4.8.2.1 The valid ammunition combination data, as defined in the FCI , consists of Gun type, Projectile type, Charge type and zone. Selecting an item of this type is done by picking a value from a pop up list.

4.5.4.8.2.2 The user defined data consists of Gun number, Tube number, Lot number, Date and MVV data.

Enter an alphanumeric string for the Gun number, Tube number and Lot number.

The data format is DD/MM/YY.

The MVV data format is a positive or negative number.

4.5.4.8.3 Select a caliber category (105mm, 155mm, 8”).

NOTE

The data is content sensitive. Data selection is restricted to the FCI valid ammunition combination. This also prevents user mistakes.

After selecting the caliber category, select the gun type. From the projectile window only projectiles that can be used with the selected gun can be used. Proceed with the charge and zone selection in the same manner.

4.5.4.8.4 Select a gun type from the gun pop up menu.

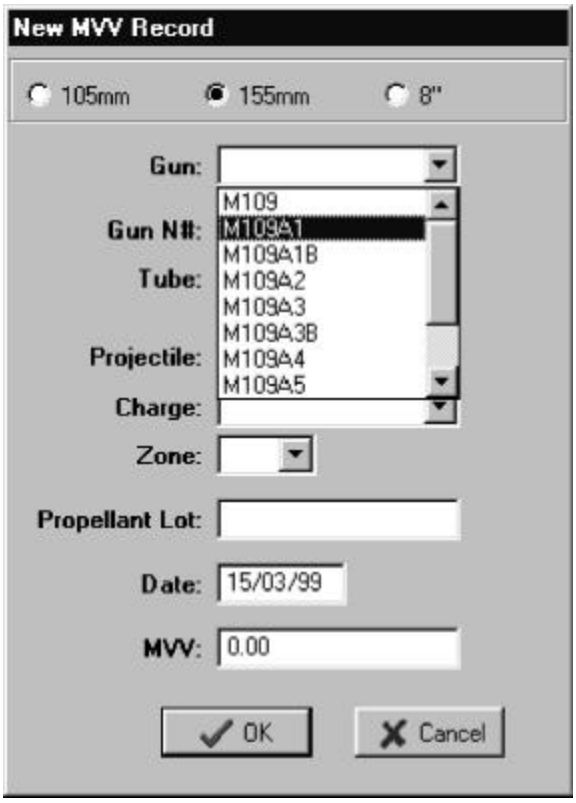

4.5.4.8.5 Select a projectile type from the pop up menu. The list shows allowed projectiles for the selected gun.

4.5.4.8.6 Select a valid charge type from the pop up menu.

4.5.4.8.7 Select a valid zone from the pop up menu.

After this selection process, the window will show mission data of a valid ammo combination, as depicted in the following screen:

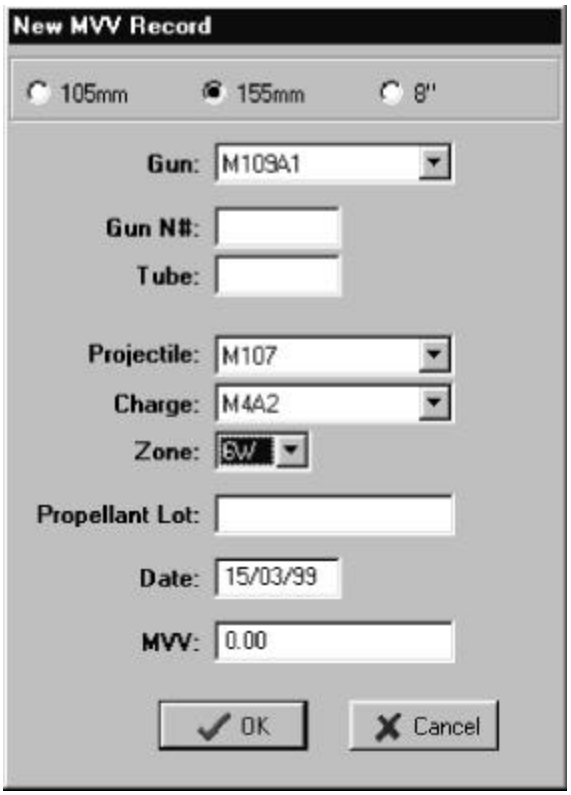

4.5.4.8.8 Enter an alphanumeric string for the Gun number.

4.5.4.8.9 Enter an alphanumeric string for the Tube number.

4.5.4.8.10 Enter an alphanumeric string for the Lot number.

4.5.4.8.11 Enter the date. The format is DD/MM/YY.

4.5.4.8.12 Enter the MVV data. The format is a positive or negative number.

4.5.4.8.13 Confirm by clicking the “ok” icon.

4.5.4.9 Deleting a MVV Data Record

To delete existing MVV data select the MVV data line and click the ”delete” icon.

A confirmation window will appear.

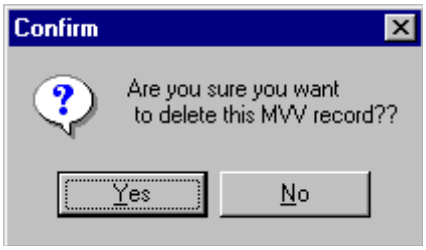

Once confirmed, the MVV data is removed from the file.

4.5.4.10 Deleting all the Displayed MVV Data

Delete all the displayed MVV data is useful to quickly remove irrelevant data such as old records or data from a different battery. This feature will remove all data that is displayed at that time. See Para 4.5.4.6.5 for filtering the displayed data.

WARNING

If no filtering was applied to the displayed data, ALL the MVV data will be deleted.

4.5.4.10.1 Filter the relevant data to be removed, as described in Para 4.5.4.6.5 .

4.5.4.10.2 Click on the “Del All MVV” icon.

A confirmation window will appear.

Due to the importance of this action, a second confirmation window will appear:

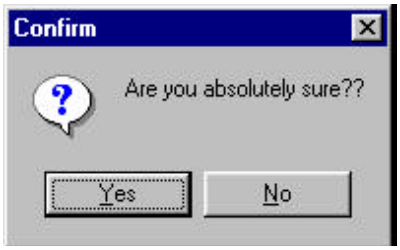

Once confirmed, the displayed MVV data is removed from the file.

4.5.4.11 Hardcopy

The MVV editor has the capability to save data to file in two printable formats:

Direct print to existing printer or print to file for viewing or printing through any word processor.

Save the data in a format compatible with Microsoft Excel, for printing or for further analysis.

NOTE

The printed data is the same data that appears on the screen. Use the filtering options (see Para 4.5.4.6.5) to select the printable MVV data.

4.5.4.11.1 Click the "print file" icon .

The standard Win95 printer dialogue will appear.

Select the correct printer type or check the "print to file" option.

The following is a printout example.

American FCI Database : Pf9256.bin, MVV Database : test.mvv

Gun	Gun N#	Tube	Charge	Projectile	Zone	Propellant Lot	Date	MVV
M109A1	A023	A0002	M119A2	M107	7R	A236589545624126	02/11/97	-4.34
M109A1	A023	A0002	M119A2	M107	7R	S8M1-99-2 99 251	02/11/97	-5.76
M109A1	D012	B0002	M119A2	M107	7R	S8M1-99-2 99 251	02/11/97	-1.20
M109A1	G112	B0002	M119A2	M107	7R	S8M1-99-2 99 251	02/11/97	-9.10
M109A1	MK03	A0B10	M119A2	M107	7R	ABC--10014121997	02/11/97	-3.59
M109A1	MK03	A0B10	M119A2	M107	7R	0-C--10014121997	02/11/97	-3.95
M109A5	MK03	A0B10	M119A1	M107	8	0-C--10014121997	06/06/97	-5.21
M109A5	MK03	A0B10	M3A1	M741	3G	0000000044444444	23/09/97	-9.38
M109A5	MK03	A0B10	M3A1	M692	3G	0000000044444444	09/23/97	-9.38
M109A5	MK03	A0B10	M3A1	M731	3G	0000000044444444	09/23/97	-5.11
M109A5	MK03	A0B10	M3A1	M121A1	3G	0000000044444444	09/23/97	-1.26
M109A5	MK03	A0B10	M3A1	M687	3G	0000000044444444	09/23/97	-6.04
M109A5	MK03	A0B10	M3A1	M110	3G	0000000044444444	09/23/97	-7.05

4.5.4.11.2 Click the "excel" icon.

The standard Win95 save file dialogue will appear. Select the filename and directory as required.

The file format complies with Microsoft Excel. The default file extension is CSV.

4.5.4.12 Appending MVV Data Files

This feature permits to combine several MVV files into one file. The purpose is to combine data that was previously extracted from an M94, or data from several systems in one battery into one complete file.

This file can later be uploaded back to the M94.

4.5.4.12.1 Click the “append” icon.

The standard Win95 open file dialogue will appear. Select the filename and directory as required.

Once the MVV data file has been selected, the new data is immediately combined with the existing data.

4.5.4.13 Saving MVV Data File

4.5.4.13.1 Click the “save” icon.

The standard Win95 save file dialogue will appear. Select the filename and directory as required.

The software saves any edited MVV data file in the format required for downloading into the M94.

The default file extension is MVV.

4.6` M94 FCI DATABASE EDITOR P/N PF67012425

4.6.1 General Description

4.6.1.1 Purpose

The purpose of the program is to change the contents of the FCI data file used to program the internal database in the M94 Muzzle Velocity System (MVS).

This database assists the MVS operator to select valid gun/ammunition combinations (ammo) according to the Fire Control Input (FCI) tables. Once the combination is selected, the MVS has access to the Standard Velocity and various temperature and weight correction factors used for calculations of the normalized velocity.

This easy to use editor allows to introduce new ammo combinations, delete obsolete ones or edit existing data, according to the FCI tables.

The M94 FCI data base editor is a utility program that runs on a PC compatible computer, under the Windows 95 operating system.

4.6.1.2 Capabilities

4.6.1.2.1 Review Existing FCI Data File

The valid ammo combinations as appear in the FCI tables are displayed in tabular form. The data is grouped in gun types and projectile types that have the same firing parameters: propellant type, charge, standard MV, temperature correction coefficients and internal M94 operating parameters.

The software has capability to sort and find any given combination without the need to browse through all the database.

Other data displayed in the same table:

a. Gun data including parallax coefficients.

b. Projectile parameters - fuzed weight, standard square number, pounds/square deviation, weight correction coefficient, allowed fuses.

4.6.1.2.2 Edit FCI Data

Any entry to the tables, as described in Para 4.6.1.2.1 can be edited.

Gun types, Projectile types, propellant or fuze names can be changed to correct errors.

New guns or projectiles can be introduced.

Links between existing guns and projectiles can be changed, added or removed to form new valid firing combinations, or remove obsolete data.

4.6.1.2.3 Create New FCI Data File

The software allows entering all FCI data to an empty form, thus create a new file not based on an existing database.

4.6.1.2.4 Saving the Data

The software saves any edited FCI data file in the format required for downloading into the M94.

When saving a changed file, the operator is prompted to enter the new file version.

4.6.1.2.5 Hardcopy

Directly prints the whole FCI database to a file, in a printable format.

4.6.2 Program Components and Configuration

4.6.2.1 Program Name

The program file is: FCI.EXE

RSL Number	Length	Date	Version
PF67012423	165920	14/03/1999	1.0

4.6.2.2 Additional File Needed

4.6.2.2.1 Data File

Normally, the use of this program would be to edit an existing M94 FCI data file. For this purpose it is required to have the last version of the M94 data base file either from the archives of by extracting the data from the M94 MVS using the ”M94 Upload /Download ” program - PF67012423.

When creating a new FCI data file, no previous data is required.

4.6.2.2.2 Set-up File

In the same directory where the FCI program is run, a setup file called FCI.INI should exist. In case this file is not present, the user will be prompted to enter a keyword. In this case enter the keyword “AMERICA”.

4.6.3 APPLICABLE DOCUMENTS

ARMY TM 9-1290-364-14&P, (MARINE CORPS TM -9814A-14&P)Conventional Muzzle Velocity System M94.

4.6.4 Nomenclature and Parameters

The following terms will be used throughout this document.

4.6.4.1 Combination, Valid Combination

A combination refers to a selection of Gun Type, Projectile Type, Fuze, Propellant Type and Charge Zone.

A valid combination is a set of allowable data items as above, as given in the FCI tables. For each valid combination the FCI tables state the firing parameters that are entered in the M94 database.

Once this data is entered into the M94, the operator will be able to select mission data from this content sensitive list, while simplifying the selection process and minimizing the chance of errors.

4.6.4.2 Record

A record is an entry to the database that defines valid combinations.

A record includes combinations that have the same combination related firing parameters (see Para 4.6.4.3.4).

Such combinations normally appear in the same page in the FCI.

Each screen viewed in the Combinations tab is regarded as a record.

4.6.4.3 Firing Parameters

For each valid combination there are several parameters used for measurement and corrections. These parameters are given in the FCI. Some parameters are gun or projectile dependent while other depends on the whole combination.

The following list shows the different parameters and their dependencies:

4.6.4.3.1 Gun Related Data

Name (i.e. M109A3).

Parallax data (length given in meters):

X - distance of transceiver from the muzzle

Y - height of installation

Z - transceiver offset from center of the tube.

4.6.4.3.2 Projectile Related Data

Name (i.e. M107).

Family(HE, RAP,BB etc.)

Weight in pounds.

Nsq : number of squares for standard weight. (usually 4sq for 155mm rounds). Note 1.

Dev/sq: weight deviation for each square, given in pounds. Note 1.

Fuse weight: weight of standard fuse. Note 2.

NOTE 1

When the weight of a projectile is given in pounds rather than in squares (i.e. M485A1, M712), set this entry to zero (Nsq=0 and Dev/sq=0). This will cause the M94 to display the weight in pounds.

NOTE 2

The projectile type is linked to a list of valid fuses and related parameters. In order to add a fuse to this list, it must exist in the Fuses table.

4.6.4.3.3 Fuse Related Data

Name (i.e. M557).

Weight in pounds.

4.6.4.3.4 Combination Related Data

For each Gun/Projectile/Propellant/Charge zone combination, the following data is given:

Velocity - standard velocity in meters/second.

Weight - weight correction coefficient (appears as “n” in the FCI).

Temp A,B,C - temperature correction coefficients.

M94 internal parameters:

Offset - measurement delay from trigger to start of measurement given in milliseconds. As a rule of thumb, use the following settings:

a. Set to 150 msec for HE and similar projectiles.

b. Set to 50 msec for RAP.

Accel - Automatic acceleration fire trigger setting. This value is directly related to the projectile’s velocity.

As a rule of thumb, use the following settings:

a. Set to 10 for velocity below 400 m/sec.

b. Set to 35 for velocity above 400 m/sec.

4.6.5 Data Ranges and Limitations

4.6.5.1 General

The following paragraph defines the range of numerical input and the total number of items that can be entered in the various data fields.

NOTE

The internal numerical representation of the data in the file may cause some numbers to change from the exact number that was entered by the user. This is normal and does not affect the operation of this software, nor the M94.

In some cases, the displayed number will have more decimal digits than actually needed (i.e. the parallax data is displayed up to 1/1000 of a meter)

4.6.5.2 Total Number of Items

The total number of items that can be entered in the various data fields is limited as follows:

4.6.5.2.1 Total number of guns per caliber category (105mm, 155mm, 8”) is 16.

4.6.5.2.2 Total number of projectiles per caliber category (105mm, 155mm, 8") is 32.

4.6.5.2.3 Total number of fuses is 32.

4.6.5.2.4 Total number of data items in one combination record is:

4.6.5.2.4.1 Up to 16 guns.

4.6.5.2.4.2 Up to 32 projectiles.

4.6.5.2.4.3 Up to 32 propellant/charge entries.

4.6.5.3 Total Number of Records

This number depends on the actual number of entries to the guns and projectiles list. The nominal number is 1000 (one thousand) records.

4.6.5.4 Range of Numerical Input

The range of values entered in the various data fields is summarized in the following table.

For numerical values, are given in the format XX.DDD to represent units and decimals.

Field	Data Type	Range	Typical Value
Gun name	Alphanumeric	7 Characters	M109A1B
Parallax (s, y, z)	Numerical	x.xxx	X=3.5, Y=0.5, Z=0.0
Projectile name	Alphanumeric	6 Characters	M116A1
Family	Alphanumeric	3 Characters	RAP
Weight	Numerical	xxx.x	95.0
Standard squares (NSQ)	Numerical	xx	4
Pounds/square (Dev/sq)	Numerical	xx.x	1.1
Standard fuze weight	Numerical	xx.xx	2.20
Fuze name	Alphanumeric	7 Characters	M513A1
Weight	Numerical	xx.xx	2.10
Propellant name	Alphanumeric	6 Characters	M119A1
Charge	Alphanumeric	2 Characters	6W
Standard velocity	Numerical	xxx.x	461.8
Weight correction	Numerical	-x.xx	-0.48
Temp correction A	Numerical	x.xxxx	0.0836
Temp correction B	Numerical	x.xxxxxxx	0.00008798
Temp correction C	Numerical	xxx.xx	150
Accelerometer	Numerical	xxx	35

4.6.6 Operation Instructions

4.6.6.1 General Comments

The program is based and runs under the Windows 95 operating system therefore it inherits many Win95 standard functions such as mouse and keyboard movements, icons for operations, open and save file dialogues and so on.

It is assumed that the operator is familiar with these functions therefore it will not be covered in this manual.

4.6.6.2 Running the Program

Run the FCI Editor by simply double clicking the program icon.

A setup file called FCI.INI should exist in the same directory where the FCI program is run. In case this file is not present, the user will be prompted to enter a keyword.

Enter the keyword ”AMERICA”.

The following screen will appear:

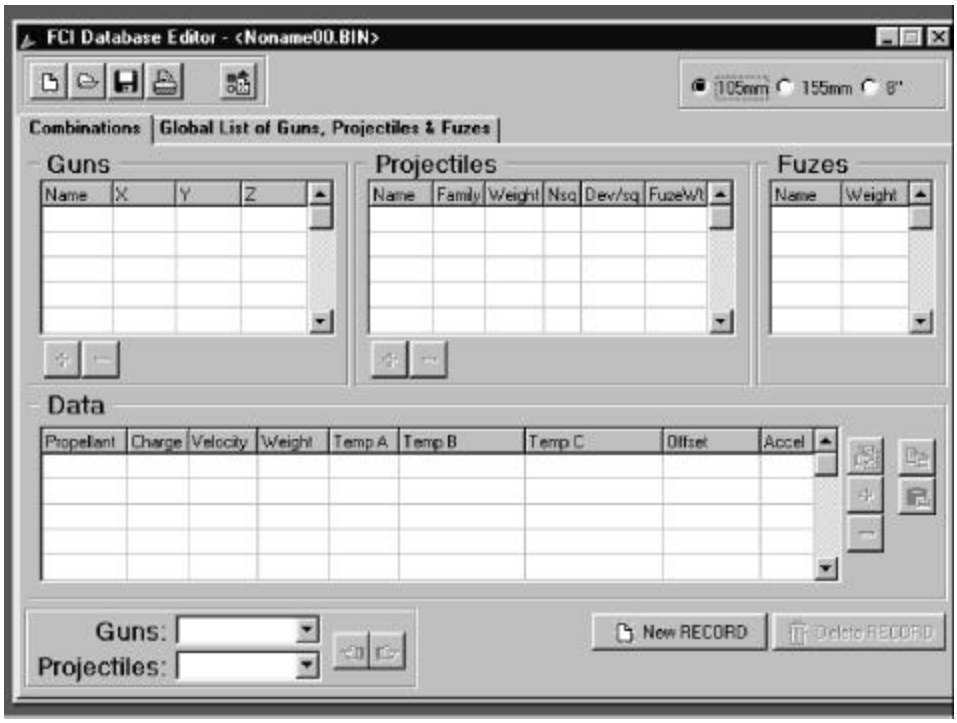

4.6.6.3 Creating a New File

Click the ”new” icon to start a new data base file.

Since some of the data is dependent on existing information, this order of operation must be followed: (the procedure for each step is described elsewhere in this manual).

4.6.6.3.1 Select the Gun Caliber Category (105mm, 155mm, 8”)

4.6.6.3.2 Create New Guns (see Para 4.6.6.5.2)

4.6.6.3.3 Create a Fuse List (see Para 4.6.6.5.3)

4.6.6.3.4 Create New Projectiles

Note that it is possible to create a new projectile before the fuse list, and later edit the projectile data to add the proper fuse (see Para 4.6.6.5.4).

4.6.6.3.5 Create a Valid Firing Combination

Create a new record that combines the firing ammunition (gun/projectile) from the list created in the previous steps, with propellant/charge/zone and firing parameters. (see Para 4.6.6.3.5)

Repeat any of the above steps as required. If needed, any data field can be changed or deleted using the editing options.

4.6.6.3.7 Removing any data item must be done in the reverse order to manually remove the links between data. For example, to remove a projectile from the list, it is necessary to first remove all its references from the combination records.

4.6.6.4 Open File

4.6.6.4.1 Click the “open” icon to reveal the open-file dialogue. Find and select the existing data file for editing.

The data base information will immediately be available for editing, deleting or adding new information.

4.6.6.5 Creating Editing and Deleting Guns, Projectiles and Fuses

4.6.6.5.1 Select the “Global List of Guns, Projectiles and Fuses” Tab

If some data has already been entered, or when reviewing an existing FCI file, the screen will not be empty but contain some information. In the following screen some data has been added for clarity.

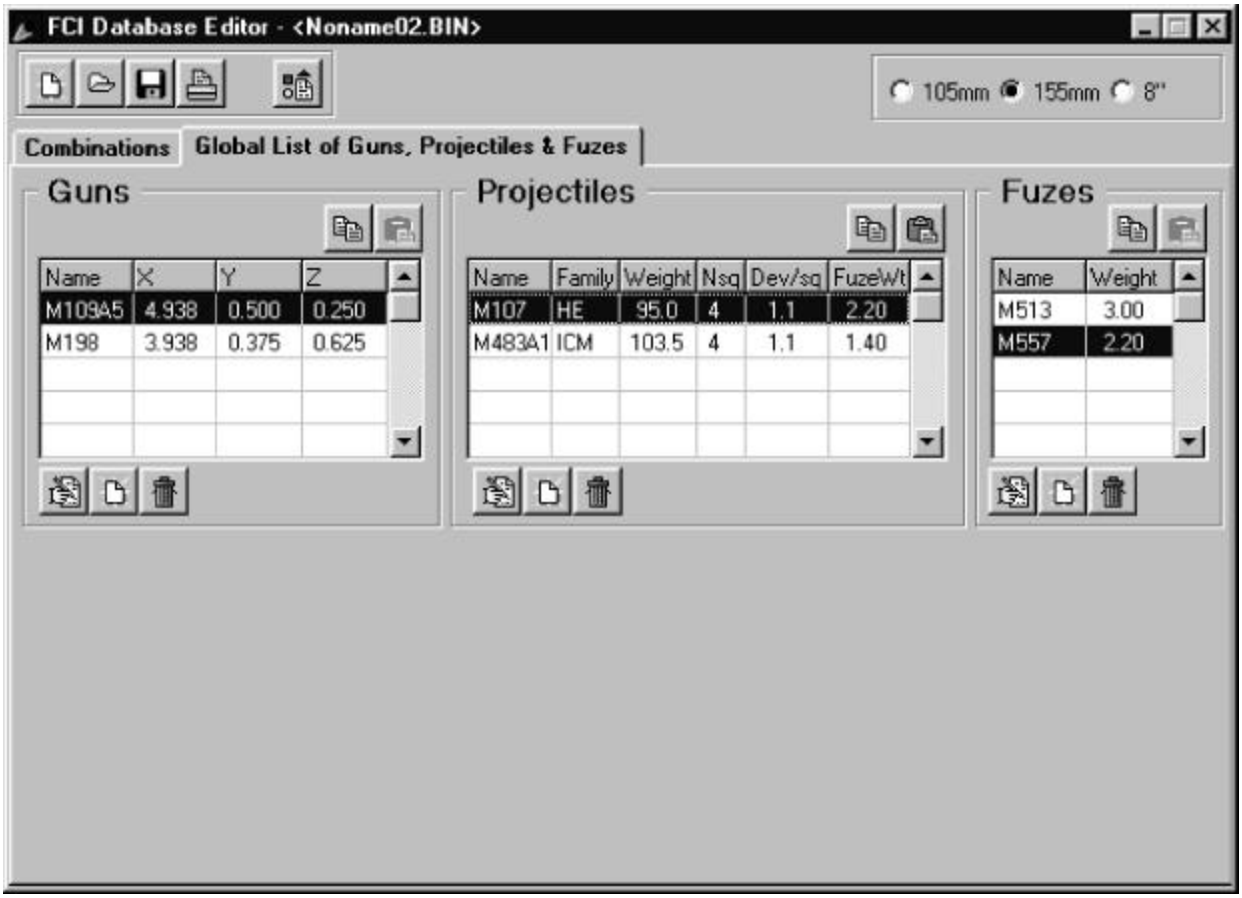

Gun Data

In the GUN window click on the “new gun” icon to create a new gun, or click on the “edit gun” icon to edit the data. The following window will let you enter new data or change the existing Gun type and parallax parameters.

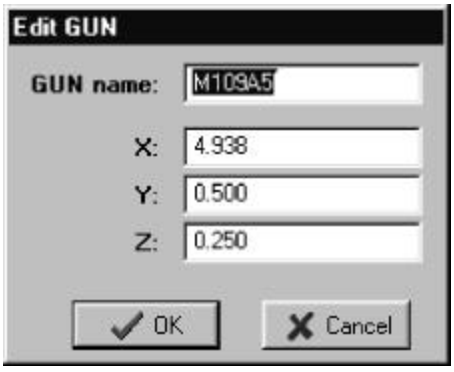

Deleting a gun is allowed by clicking on the “delete gun” icon. A gun can be deleted only after all references to it are removed from the combination records (see Para 4.6.6.6.5.5).

4.6.6.5.3 Fuse Data

In the Fuse window, click on the “new fuse” icon. The following window will appear.

Enter the fuse name (i.e. M557) and the fuse weight.

To edit an existing fuse, select it and then click the “edit” icon.

4.6.6.5.4 Projectile Data

In the Projectile window, click on the “new Projectile” icon. The following window will appear.

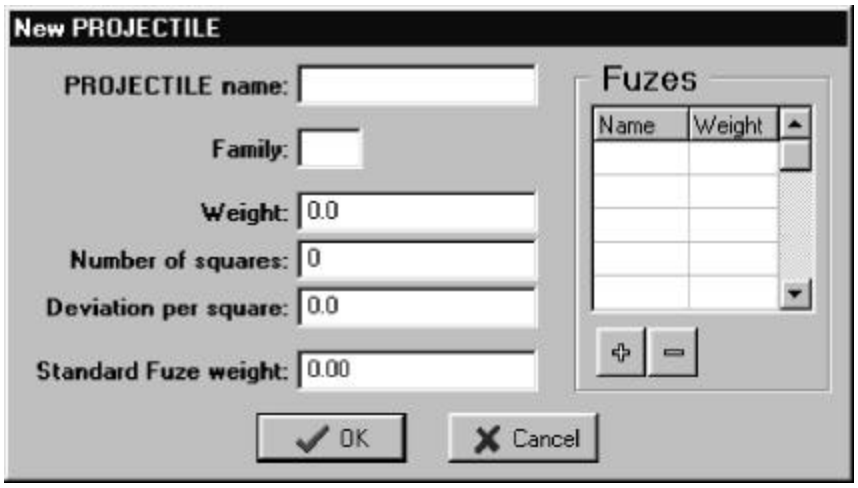

Enter the projectile’s parameters according to the FCI values.

To edit an existing projectile, select it and then click the “edit” icon.

To remove a projectile from the list, it is necessary to first remove all its references from the combination records.

NOTE

When the weight of a projectile is given in pounds rather than in squares (i.e. M485A1, M712), set this entry to zero(Nsq=0 and Dev/sq=0). This will cause the M94 to display the weight in pounds.

If the needed fuse has been already created(see Para 4.6.6.5.3) then it is possible to link a projectile with the valid fuses by clicking the “+” icon and selecting the correct entry from the list of fuses. Repeat this procedure for all the fuses that are valid to a given projectile.

Remove a fuse from the list by selecting it and clicking the “-” icon.

If the required fuse does not exist, it is possible to add it at a later time using the edit option.

4.6.6.6 Combinations

4.6.6.6.1 Select the “Combinations” Tab

If some data has already been entered, or when reviewing an existing FCI file, the screen will not be empty but contain some information. In the following screen some data has been added for clarity.

4.6.6.6.2 Data Displayed

The valid ammo combinations as appear in the FCI tables are displayed in tabular form.

The data is grouped in gun types and projectile types that have the same firing parameters. See explanation below.

For quick reference the following data is displayed but can not be changed. To change any entry (i.e. projectile weight) refer to Para 4.6.6.5 .

The displayed data windows are: Gun data including parallax coefficients, Projectile parameters (fused weight, standard square number, pounds/square deviation, weight correction coefficient, allowed fuses) and Fuse data. Selecting a projectile will lead to a change in the displayed fuse list.

NOTE

The internal numerical representation of the data in the file may cause some numbers to change from the exact number that was entered by the user. This is normal and does not affect the operation of this software, nor the M94.

In some cases, the displayed number will have more decimal digits than actually needed (i.e. the parallax data is displayed up to 1/1000 of a meter).

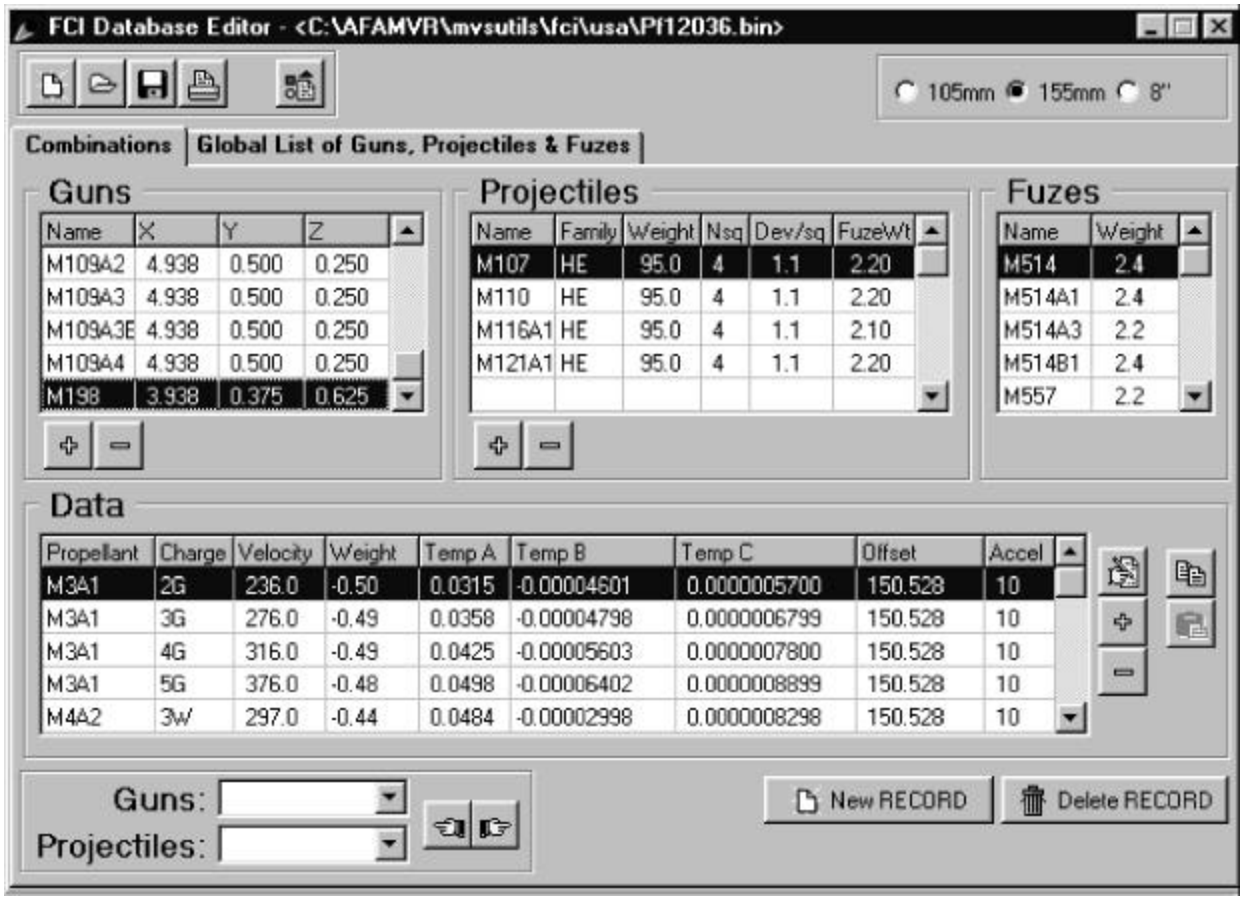

4.6.6.6.3 Understanding the Record

The data is grouped in gun types and projectile types that have the same firing parameters. Such a group of data is called a “RECORD”.

The screen above represents one record that groups 5 different guns with 4 different projectiles. When firing any one of the guns with any of the projectiles, the valid propellant and charge are the same. Also the firing parameters are exactly equal.

For example: the combination M198 / M107 / M3A1 / 3G has a standard velocity of 276.0 m/sec and the correction factors as can be seen. The combination M109A4 / M110 / M3A1 / 3G has exactly the same parameters.

The gun M109A5 can fire the same combination, but since some of the parameters (standard velocity = 273.0 m/sec) are different, it will appear in a separate record.

4.6.6.6.4 Browsing through the Records

The software provides the capability to browse through all the database or sort and quick-find any given combination.

Click on the “next record” or “previous record” icons to browse through all the records.

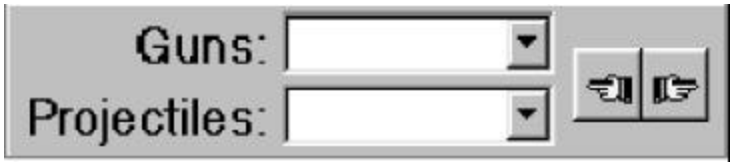

To browse through valid combinations of a specific gun type, select it from the gun list.

To view the guns that use a given projectile, select it from the projectile list.

To fast find a required combination, select both the gun and the projectile.

4.6.6.6.5 Creating a New Record

Click on the “new record” icon on the bottom of data the window.

An empty record will appear.

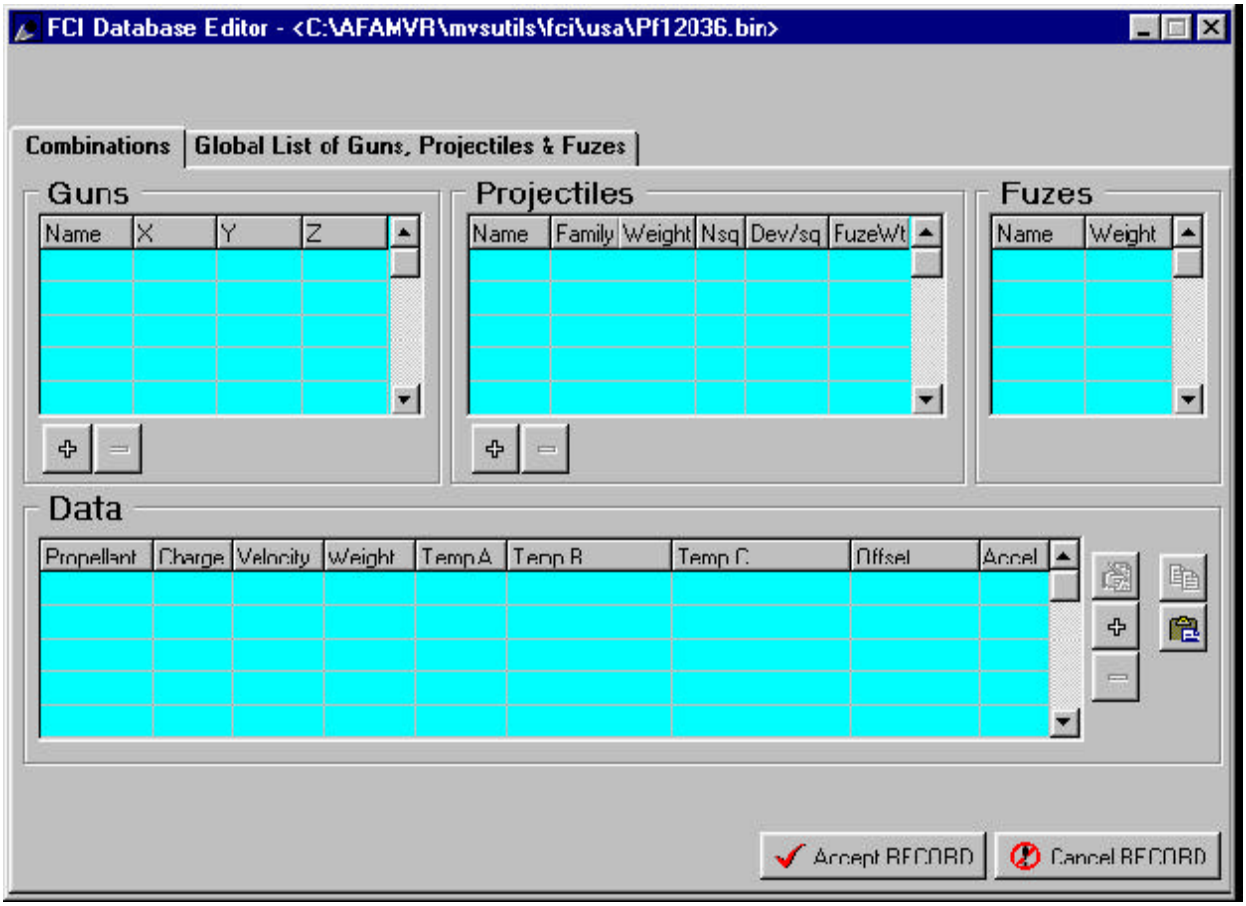

4.6.6.6.5.1 Enter the gun types by clicking the “+” icon in the guns window. A list of available guns will appear.

Select the required gun and press “ok”. The gun name and parallax data will appear in the gun window.

Repeat the process if more than one gun are in the same record.

Remove a gun type by selecting it and then clicking the “-” icon in the guns window.

4.6.6.6.5.2 Enter the projectile types by clicking the “+” icon in the projectile window.

A list of available projectile will appear. Select the required projectile and press “ok”. The projectile name and parameters will appear in the projectile window. The fuse window will show the valid selections for this combination.

Repeat the process if more than one projectile are in the same record.

Remove a projectile type by selecting it and then clicking the “-” icon in the projectile window.

4.6.6.6.5.3 In the DATA window click the “+” icon to enter the firing parameters for the selected guns/projectiles combination.

The following window will appear:

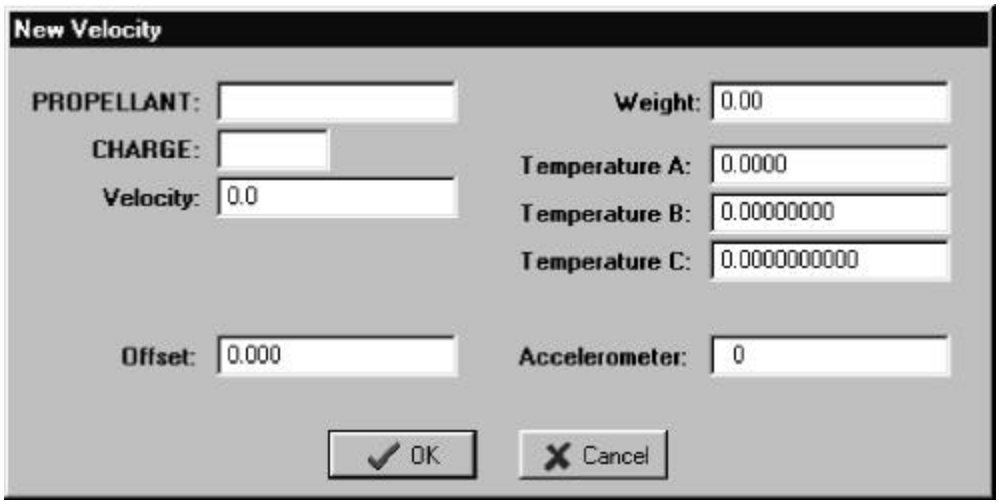

Enter the required data according to the FCI (in parenthesis are given some typical values):

a. Propellant - propellant name (M3A1)

b. Charge - charge zone (3G)

c. Velocity - standard velocity in meters/second

d. Weight - weight correction coefficient, appears as “n” in the FCI (-0.35).

e. Temp A,B,C - temperature correction coefficients

M94 internal parameters:

a. Offset - measurement delay from trigger to start of measurement given in milliseconds.
As a rule of thumb, use the following settings:
Set to 150 msec for HE and similar projectiles
Set to 50 msec for RAP

b. Accelerometer - Automatic acceleration fire trigger setting. This value is directly related to the projectile’s velocity.
As a rule of thumb, use the following settings:
Set to 10 for velocity below 400 m/sec.
Set to 35 for velocity above 400 m/sec.

NOTE

After completing this input screen by pressing “ok” it is required to click the ACCEPT RECORD button to complete the creation of the record.

4.6.6.6.5.4 Once a record exists, it is possible to add more data by clicking the “+” icon.

4.6.6.6.5.5 Removing data from a record is done by selecting the item and clicking the “-” icon.

NOTE

To remove a single propellant/charge combination select the item and click the “-” icon.

WARNING

The icon “Delete Record” will remove the whole record data rather. To remove a single item use the “-” icon.

4.6.6.6.5.6 Edit an existing combination data by clicking the “edit” icon. Note that it is not possible to change the propellant or charge fields. Only the data fields are accessible. This precaution was taken to avoid mistakes in this important field.

To edit the propellant or charge fields it is required to remove the data from the given record (see Para 4.6.6.6.5.5) and add a new one(see Para 4.6.6.6.5.4).

4.6.6.7 Saving the Data

The software saves any edited FCI data file in the format required for downloading into the M94.

4.6.6.7.1 Click the “save” icon.

4.6.6.7.2 When saving a changed file, the operator is prompted to enter the new file version.

4.6.6.7.3 The standard Win95 “save file” dialogue is activated to allow the user to save the file in any directory, under any filename. The default extension for this file is BIN.

4.6.6.8 Hardcopy

Directly prints the whole FCI database to a file, in a printable format.

4.6.6.8.1 Click on the “print” icon to access the ”save file” dialogue. Select a file name and location for the print file. The default extension for this file is PRT.

4.6.6.8.2 The printed data format consists of several sections of gun data, projectiles and valid combinations. The following paragraphs use partial data to describe the tables content.

4.6.6.8.2.1 File name and constant parameters.

The header names the FCI data file and location. Also appear the file version (2.4) and other data.

```
- - - - - - - - - - - - - - - - - - - - - - - - - - - - -
American Database : C:\M94 \fci\pf9296.BIN
- - - - - - - - - - - - - - - - - - - - - - - - - - - - -
Version        :              2.4
Time Limit     :              11.976
Threshold      :              5100000.000
Antenna        :              10.536
```

4.6.6.8.2.2 Guns List

The guns are grouped in caliber category (105mm, 155mm, 8”).
For each gun also appears the parallax correction .

```
- - - - - - - - - - - - - - - - - - - - - - - - - - - - - - - - - - - - - - - - - - -
GUNS 155mm
- - - - - - - - - - - - - - - - - - - - - - - - - - - - - - - - - - - - - - - - - - -
- - - - - - - - - - - - - - - - - - - - - - - - - - - - - - - - - - - - - - - - - - -
| Name          | Par X          | Par Y          | Par Z  |
- - - - - - - - - - - - - - - - - - - - - - - - - - - - - - - - - - - - - - - - - - -
| M109A1        | 4.938          | 0.500          | 0.250        |
| M109A1B       | 4.938          | 0.500          | 0.250        |
| M109A2        | 4.938          | 0.500          | 0.250        |
| M109A3        | 4.938          | 0.500          | 0.250        |
| M109A3B       | 4.938          | 0.500          | 0.250        |
| M109A4        | 4.938          | 0.500          | 0.250        |
| M109A5        | 4.938          | 0.500          | 0.250        |
| M109A6        | 5.000          | 0.625          |-0.250        |
| M114A2        | 1.438          | 0.563          |-0.063        |
|  M198         | 3.938|          0.375          | 0.625        |
- - - - - - - - - - - - - - - - - - - - - - - - - - - - - - - - - - - - - - - - - - -
```

4.6.6.8.3 Projectiles List

The list contains all the projectile parameters and valid fuses.

```
- - - - - - - - - - - - - - - - - - - -
```

4.6.6.8.4 Fuses List and Weight

FUZES

Name	Weight	Name	Weight
M513	3.00	M577A 1	1.40
M513A1	2.40	M582	1.50
M513A2	2.40	M582A1	1.50
M513B1	2.40	M728	2.20
M514	2.40	M732	1.80
M514A1	2.40	M732A2	1.20
M514A3	2.20	M739	1.50
M514B1	2.40	M739A1	1.50
M548	2.10	M762	1.10
M557	2.20	M767	1.09
M564	2.10	M78	2.10
M565	2.10	M78A1	2.10
M572	2.30	MK399/1	2.70
M577	1.40	NONE	0.00

4.6.6.8.5 Combination's Data

The combinations are grouped according to their appearance in the record data.

Caliber Family : 155mm

GUNS:
M109A1 , M109A1B, M109A2 , M109A3 , M109A3B, M109A4 , M198

PROJECTILES:
M107 , M110 , M116A1, M121A1

COMBINATIONS:

Charge	Zone	Velocity	Weight	Temp A	Temp B	Temp C	Offset	Accel
M3A1	2G	236.0	-0.50	0.0315	-0.00004601	0.0000005700	150.528	10
M3A1	3G	276.0	-0.49	0.0358	-0.00004798	0.0000006799	150.528	10
M3A1	4G	316.0	-0.49	0.0425	-0.00005603	0.0000007800	150.528	10
M3A1	5G	376.0	-0.48	0.0498	-0.00006402	0.0000008899	150.528	10
M4A2	3W	297.0	-0.44	0.0484	-0.00002998	0.0000008298	150.528	10

4.7 M94 REMOTE CONTROL P/N PF67012426

4.7.1 General Description

4.7.1.1 Purpose

The purpose of this program is to access all the M94 Muzzle Velocity System (MVS) functions via communication for remote control of the system in training purposes. It can also be used to operate the M94 in harsh environments as testing sites.

The computer screen acts exactly as the system, without impairing it's operation or capabilities.

The M94 Remote Control program is a utility that runs on a PC compatible computer, under the Windows 95 operating system.

4.7.1.2 Capabilities

4.7.1.2.1 Communication

This program communicates between a PC compatible computer, running on Windows 95, and the M94 CPDU unit.

The connection is achieved using the M94 computer cable.

Communication parameters are:

a. RS232

b. BAUD rate: 9600 bits/sec

c. 8 bits

d. Parity - none

e. Stop bit -1

4.7.2 Program Components

Program name: PCREMCON.EXE

RSL Number	Length	Date	Version
PF67012426	739840	15/11/1999	1.0

4.7.3 Applicable Documents

ARMY TM 9-1290-364-14&P, (MARINE CORPS TM -9814A-14&P)
Conventional Muzzle Velocity System M94

4.7.4 Operation Instructions

4.7.4.1 General Comments

The program is based and runs under the Windows 95 operating system therefore it inherits many Win95 standard functions such as mouse and keyboard movements, icons for operations, open and save file dialogues and so on.

It is assumed that the operator is familiar with these functions therefore it will not be covered in this manual.

4.7.4.2 Interconnections

The connection is achieved using the M94 computer cable. Connect the computer's serial port to p2 on the CPDU.

4.7.4.3 Running the Program

Run the M94 Remote Control by simply double clicking the program icon.

The following screen will appear:

4.7.4.4 Configuration

4.7.4.4.1 Turn on the CPDU

4.7.4.4.2 On the computer, move the pointing device (mouse) to the top of the window, to reveal the configuration bar.

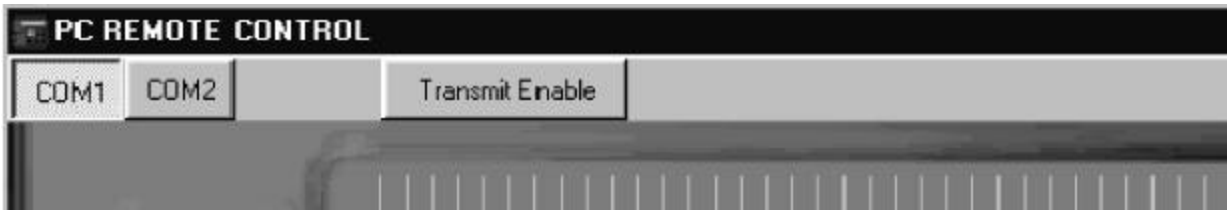

4.7.4.4.3 Configure the correct serial communications port in your computer by selecting COM1 or COM2.

4.7.4.4.4 Verify the CPDU is ON. Click the “Transmit Enable” bar to open the communications link between the CPDU and the computer.

NOTE

If the CPDU is turned off and on again, it is required to repeat this operation.

4.7.4.5 Operation

4.7.4.5.1 Control

All the M94 functions (hot-keys), numeric and alphanumeric data is entered using the mouse on the CPDU keyboard on the display. The real keyboard on the CPDU is still functional and can be used.

4.7.4.5.2 Display

The computer display resembles the M94 display in its form and position of the displayed data.

CHAPTER 5
UNPACKING AND INSTALLATION

CHAPTER CONTENTS

Subject		Page
5.1	GENERAL	5-1
5.1.1	UNPACKING	5-1
5.1.2	INSTALLATION	5-2
5.1.3	INSTALLATION OF TRANSCEIVER ASSEMBLY ON GUN	5-2
5.1.4	SYSTEM INTERCONNECTION	5-2

5.1 GENERAL

This chapter describes procedures required for proper unpacking and installation of the M94 MVS.

5.1.1 Unpacking

a. Open packaging and verify that all parts are present. Refer to Table 1-1 and Figure 1-1.

b. Inspect Transceiver Assy and verify:

1. No external mechanical damage to Transceiver housing.
2. No connector pins are bent or broken.
3. Transceiver Assy is properly fastened to Mounting Bracket Assy. If necessary, tighten four screws using 5-mm hex key wrench.

c. Inspect cables and verify:

1. No external mechanical damage.
2. No pins are bent or broken.

NOTE

Remember to place dust caps on all connectors when not in use.

5.1.2 Installation

Installation of the system units is performed in the following steps:

a. Installation of Transceiver Assy and Mounting Bracket Assy on non-recoiling part of gun.

b. System interconnection.

5.1.3 Installation of Transceiver Assembly on Gun

a. Verify Transceiver Assembly is properly mounted to Mounting Bracket Assy and all screws are fastened.

b. Place Bracket Assy (with Transceiver Assembly already mounted) on its position on gun.

c. Using handle, mount Bracket Assy on the existing gun mount.

d. Verify Bracket Assy is properly fastened to gun mount.

5.1.4 System Interconnection

a. Verify CPDU ON/OFF switch is in OFF position.

b. Connect 30-meter Interconnection Cable from Transceiver Assembly to CPDU as shown in Figure 1-2.

c. Connect 50-meter Power Cable from CPDU to nominal 28 VDC power source as shown in Figure 1-2.

CHAPTER 6
PREPARATION FOR SHIPMENT

CHAPTER CONTENTS

SUBJECT		PAGE
6.1	GENERAL	6-1
6.1.1	SHIPPING M94 MVS IN CRATES	6-1
6.1.2	SHIPPING M94 MVS WITHOUT PACKING	6-1
6.1.3	SHIPPING CPDU OR TRANSCEIVER ASSEMBLY	6-1
6.1.4	SHIPPING ELECTRONIC PARTS	6-2

6.1 GENERAL

When shipping or storing the M94 MVS, ensure that it is operating satisfactory. If the M94 MVS operation is not satisfactory, make a list of faults or symptoms. The M94 MVS may be shipped secured in its transit case (Figure 6-1) or packed in a crate. The Interconnection Cable (30-Meter) and Power Cable (50-Meter) are coiled on cable drums (Figure 6-2). The cable connectors are protected with dust caps and then secured in tubular enclosures mounted on the outside of the drum. The drums are then placed in suitable containers for shipment. Batteries must be removed from Doppler Simulator prior to storage or shipment.

NOTE

When placing the MVS inside the carrying case, avoid damage to carrying case foam by MVS edges, bracket handle and bolt, etc.

6.1.1 Shipping M94 MVS in Crates

a. Select wooden crate that will enable placing cables and system carrying case side by side.
b. Insert a three-wall insert carton between system case, cables, and crate to avoid movement during transportation.
c. Place packing material to crate box level.
d. Seal crate.
e. Mark crate IAW MIL-STD-129.
f. The M94 MVS is now ready for shipping or storage.

6.1.2 Shipping M94 MVS without Packing

a. Ensure that system transit case is securely closed.
b. Ensure that Interconnection Cable (30-Meter) and Power Cable (50-Meter) are securely wound on cable drums. Also ensure that cable ends are secured and protective covers are placed on connectors.
c. Ship or store units.

6.1.3 Shipping CPDU or Transceiver Assembly

a. Wrap unit with antistatic bubble sheets.
b. Place unit in suitable firm carton or box.

c. Pad well with soft packing material. Verify that item will remain firm during shipment.
d. Fill carton with packing material.
e. Seal carton.
f. Mark carton with item name, NSN, and part number in accordance with MIL-STD-129.

6.1.4 Shipping Electronic Parts

a. Wrap parts with antistatic bubble sheet.
b. Place parts in antistatic sealed bag and package IAW the latest revision of MIL-STD-2073.
c. Place sealed item in suitable, firm carton or box.
d. Pad well with soft packing material.
e. Fill carton with packing material.
f. Seal carton.
g. Mark carton with item name, NSN, and part number in accordance with MIL-STD-129.

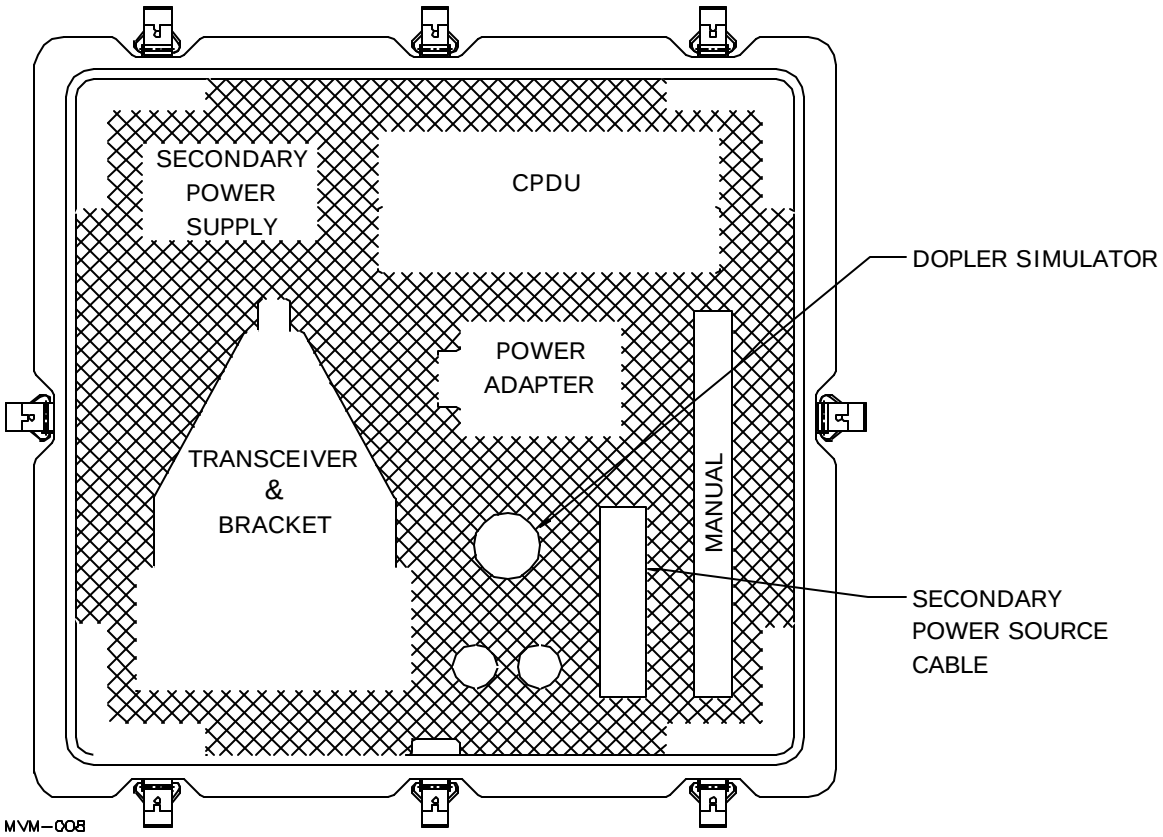

Figure 6-1. System Transit Case

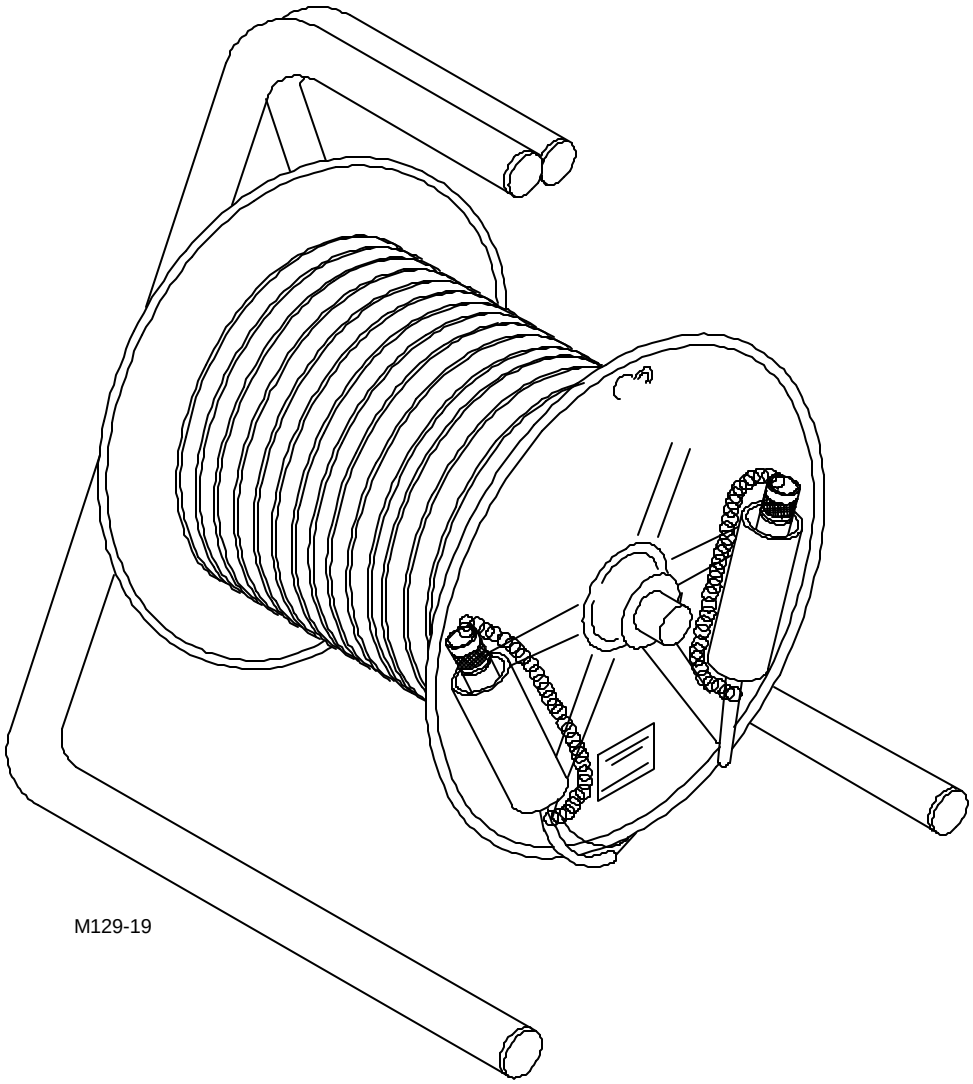

Figure 6-2. Cable Drum with Cable

6.1.5 Shipping Instructions for items not repairable at field level:

a. Fill out DA 2407 and DA 1348-1 to describe defects with item and where the items need to be returned to. If serialized, include serial number of unit.

b. Address for Shipping:

Borish Manufacturing Corp.
4511 East Paris SE
Grand Rapids, Ml 49512
DODAC: CMANJX
RIO: CTN

c. Send one copy of DA Form 1348-1 and 2407 to the above address and one copy to the following address:

TACOM-RI
AMSTA-LC-CFAC
ATTN: Mr. Mike Wendlen
Rock Island Arsenal, IL 61299-7630

PHONE: COMMERCIAL: (309) 782-3225, DSN: 793-3225

d. Reproducible Forms are located in Appendix I for your convenience.

CHAPTER 7

STORAGE

CHAPTER CONTENTS

SUBJECT		PAGE
7.1	GENERAL	7-1
7.1.1	PREPARATION FOR STORAGE	7-1
7.1.2	ENVIRONMENT	7-2
7.1.3	RETURN TO SERVICE	7-2

7.1 GENERAL

7.1.1 Preparation for Storage

CAUTION

Ensure batteries are removed from the Doppler Simulator before storing the M94 MVS.

This chapter describes procedures required for storing the M94 MVS. Refer to TM 740-90-1 for instructions on placing the M94 MVS in administrative storage. Marine Corps personnel should refer to MCO P4450.7, Marine Corps Warehousing Manual. All equipment should be stored in a cool, dry location if possible. All components must be kept in the transit case provided with the system. (See Figure 6-1.)

7.1.2 Environment

Once prepared for storage, the M94 MVS may be stored indefinitely in an environment suitable for electronic equipment. Maximum and minimum environmental conditions are as follows:

Maximum Temperature	+150° F
Minimum Temperature	- 50° F
Relative Humidity	≤95%

7.1.3 Return to Service

To return an M94 MVS to service after storage, perform the following procedures:

a. Perform external inspection in accordance with Para 3.1.5.

b. Perform CPDU self test in accordance with Para 2.17.1.

c. Perform system test in accordance with Para 2.17.2.

APPENDIX A
REFERENCES

APPENDIX CONTENTS

Page

A.1 GENERAL A-1
A.1.1 FORMS A-1
A.1.2 FIELD MANUALS A-1
A.2 TECHNICAL MANUALS A-2
A.3 MISCELLANEOUS PUBLICATIONS A-2
A.4 BLANK FORMS A-3

A-1 GENERAL

This appendix lists all the forms, field manuals, technical manuals, and miscellaneous publications referenced in this manual.

A.1.1 Forms

Recommended Changes to Publications and Blank Forms	DA Form 2028
Recommended Changes to Equipment Technical Publications	DA Form 2028-2
Equipment Inspection and Maintenance Worksheet	DA Form 2404
Maintenance Request	DA Form 2407
DOD Single Line Item Release/Receipt Document	DD Form 1340-1
Transportation and Travel Record of Transportation Discrepancies	MCO P461 0.19
Report of Discrepancy (ROD)	SF Form 364
Product Quality Deficiency Report	SF Form 368

A.1.2 Field Manuals

Nuclear, Biological, Chemical (NBC) Decontamination	FM 3-5
Operation and Maintenance of Ordnance Material	
In Cold Weather (0° to –65° F)	FM 9-207
First Aid for Soldiers	FM 21-11
Operating Under Unusual Conditions	FM 21-305

A.2 TECHNICAL MANUALS

General Maintenance Procedures for Fire Control Material	TM 9-254
Painting Instructions for Army Material	TM 43-0139
Painting Instructions for Marine Material	TM 4750-15/1
Administrative Storage of Equipment	TM 740-90-1
Procedures for Destruction of Tank-Automated Equipment to Prevent Enemy Use (US Army Tank-Automotive Command)	TM 750-244-6
Equipment Record Procedures	TM 4700-15/1
ESD Awareness	TM 9999-15/1
ESD Awareness	TM 9999-15/2

A.3 MISCELLANEOUS PUBLICATIONS

Army Material Maintenance Policies	AR 750-1
Army Medical Department Expendable/Durable Items	CTA 8-100
Expendable/Durable Items (Except Medical, Class V, Repair Parts, and Heraldic Items)	CTA 50-970
Material Management for Using Units, Support Units, and Installations	DA PAM 710-2-1
The Army Maintenance Management System (TAMMS)	DA PAM 738-750
US Army Equipment Index of Modification Work Orders	DA PAM 750-10
Marine Corps Warehousing Manual	MCO P4450.7
Quality Deficiency Report	MCO 4855.10
Recommended Changes to Technical Publications	NAVMC 10772

A.4 BLANK FORMS

EQUIPMENT INSPECTION AND MAINTENANCE WORKSHEET

For use of this form, see DA PAM 738-750 and 738-751; the proponent agency is DCSLOG

1. ORGANIZATION					2. NOMENCLATURE AND MODEL	
3. REGISTRATION/SERIAL/NSN	4a. MILES	b. HOURS	c. ROUNDS FIRED	d. HOT STARTS	5. DATE	6. TYPE INSPECTION

7. APPLICABLE REFERENCE			
TM NUMBER	TM DATE	TM NUMBER	TM DATE

COLUMN a – Enter TM item number.
COLUMN b – Enter the applicable condition status symbol
COLUMN c – Enter deficiencies and shortcomings.
COLUMN d – Show corrective action for deficiency or shortcoming listed in Column c.
COLUMN e – Individual ascertaining completed corrective action initial in this column.

STATUS SYMBOLS

"X" – Indicates a deficiency in the equipment that places it in an inoperable status.

CIRCLED "X" – Indicates a deficiency, however, the equipment may be operated under specific limitations as directed by higher authority or as prescribed locally, until corrective action can be accomplished.

HORIZONTAL DASH "(-)" – Indicates that a required inspection, component replacement, maintenance operation check, or test flight is due but has not been accomplished, or an overdue MWO has not been accomplished.

DIAGONAL "(/)" – Indicates a material defect other than a deficiency which must be corrected to increase efficiency or to make the item completely serviceable.

LAST NAME INITIAL IN BLACK, BLUE-BLACK INK, OR PENCIL - Indicates that a completely satisfactory condition exists.

FOR AIRCRAFT - Status symbols will be recorded in red.

ALL INSPECTIONS AND EQUIPMENT CONDITIONS RECORDED ON THIS FORM HAVE BEEN DETERMINED IN ACCORDANCE WITH DIAGNOSTIC PROCEDURES AND STANDARDS IN THE TM CITED HEREON.

8a. SIGNATURE *(Person(s) performing inspection)*	8b. TIME	9a. SIGNATURE *(Maintenance Supervisor)*	9b. TIME	10. MANHOURS REQUIRED

TM ITEM NO. *a*	STATUS *b*	DEFICIENCIES AND SHORTCOMINGS *c*	CORRECTIVE ACTION *d*	INITIAL WHEN CORRECTED *e*

DA FORM 2404, APR 79 Replaces edition of 1 Jan 64, which will be used USAPPC V1.00

TM ITEM NO. *a*	STATUS *b*	DEFICIENCIES AND SHORTCOMINGS *c*	CORRECTIVE ACTION *d*	INITIAL WHEN CORRECTED *e*

MAINTENANCE REQUEST For use of this form, see DA PAM 738-750 and 738-751; the proponent agency is DCSLOG	PAGE NO.	NO OF PAGES	REQUIREMENT CONTROL SYMBOL CSGLD-1047(*R1*)

SECTION I - CUSTOMER DATA

1a. UIC CUSTOMER	1b. CUSTOMER UNIT NAME	1c. PHONE NO

2a. SAMS-2 UIC/SAMS-I/TDA	2b. UTILIZATION CODE	2c. MCSR

SECTION II - MAINTENANCE ACTIVITY DATA

3a. WORK ORDER NUMBER (*WON*)	3b. SHOP	3c. PHONE NO

4a. UIC SUPPORT UNIT	4b. SUPPORT UNIT NAME

SECTION III - EQUIPMENT DATA

5. TYPE MNT REQ CODE	6. ID	7. NSN

8. MODEL

9. NOUN

10a. ORG WON/DOC NO	10b. EIC

11 SERIAL NUMBER	12. QTY	13. PD

14. MALFUNCTION DESCRIPTION *(for DSU, GSU/AVIM, DEPOT use)*

15a. FAILURE DETECTED DURING/WHEN DISCOVERED CODE *(Enter code)* - See DA Pamphlet 738-750 and 738-751	

15b. FIRST INDICATION OF TROUBLE/ HOW RECOGNIZED CODE *(Enter Code)* See DA Pamphlet 738-750 and 738-751	16. MILES/KILOMETERS/HOURS/ROUNDS M:	K:
	H:	R:

17. PROJECT CODE *(if assigned)*	18. ACCOUNT PROCESSING CODE	19. IN WARRANTY? *(enter Y or N)* Y	20. ADMIN NO

21. REIMBURSABLE CUSTOMER *(if Intransit customer enter Y or N)* Y	
22. LEVEL OF WORK O	23. SIGNATURE

24. DESCRIBE DEFICIENCIES OR SYMPTOMS ON THE BASIS OF COMPLETE CHECKOUT AND DIAGNOSTIC PROCEDURES IN EQUIPMENT TM *(Do not prescribe repairs)*

25. REMARKS

PREPARATION INSTRUCTIONS FOR THIS PAGE

SECTION I

Block 1a. Enter UIC of submitting organization.
Block 1b. Enter name of submitting organization.
Block 1c. Enter number to be called when maint. is completed.
Block 2a. Enter UIC of supporting SAMS-2/SAMS-I/TDA if work is requested while in transit and away from your support maintenance unit.
Block 2b. Enter utilization code. See DA Pamphlets 738-750 and 738-751.
Block 2c. Enter "Y" if reportable under AR 700-138. If not, leave blank.

SECTION II

Leave blank. To be completed by the support maintenance DSU/GSU/AVIM/DEPOT.

SECTION III

Block 5. Enter the Type Maintenance Request Code. See DA Pamphlet 738-750 and 738-751.
Block 6. Enter ID associated with block 7. See DA Pamphlets 738-750 and 738-751.
Block 7. Enter the NSN or stock number of the item being submitted.
Block 8. Enter model of item being submitted.
Block 9. Enter noun/nomenclature of item being submitted.
Block 10a. Enter Work Order Number (*WON)/DOC NO* assigned when item is submitted. Otherwise, leave blank.
Block 10b. Enter End Item Code. See AMDF.
Block 11. Enter serial number of item being submitted.

SECTION III *(Cont'd)*

Block 12. Enter the quantity of items being submitted.
Block 13. Enter the maintenance priority designator determined from DA PAM 710-2-1.
Block 14. For DSU, GSU/AVIM, DEPOT use.
Block 15a. Enter the code that most accurately describes when the fault or deficiency was detected. See DA Pamphlets 738-750 and 738-751.
Block 15b. Select one. Enter the code. See DA Pamphlets 738-750 and 738-751.
Block 16. Enter the accumulated usage data in blocks, when equipment is subject to usage reporting.
Block 17. Enter the project code if one has been assigned. If not, leave blank.
Block 18. See DA Pamphlets 738-750 and 738-751.
Block 19. Enter "Y" or "N" to indicate whether equipment is still under manufacturer's warranty.
Block 20. Enter the admin number assigned for property control purposes for the equipment being submitted.
Block 21. For DSU/GSU/AVIM/Depot use.
Block 22. Enter level of work performed "O" for UNIT LEVEL/AVUM, "F" for DSU/AVIM, "H" for GSU, "D" for DEPOT, "K" for contractor or "L" for Spc Rpr Act.
Block 23. Enter the signature of the CO or the CO's designated representative when the priority designator is 01-10. For priority designators 11-15, leave blank.
Block 24. Enter a brief description of the deficiencies or symptoms that you feel require attention at this level of maint.
Block 25. Self-explanatory.

34a. SUBMITTED BY	35a. ACCEPTED BY	35c. DATE

34b. DATE	35b. STATUS	35d. TIME

Block 34a. Enter first initial and last name of submitter.
Block 34b. Enter ordinal date submitted *(YYDDD)*.
Block 35a. Enter first initial and last name of person accepting maint. request.
Block 35b. Enter the initial status. See DA Pamphlets 738-750 and 738-751.
Block 35c. Enter ordinal date accepted *(YYDDD)*.
Block 35d. Enter military time.

DA FORM 2407, JUL 94 PREVIOUS EDITIONS OF DA FORM 2407 AND DA FORM 5504 ARE OBSOLETE **RECEIPT COPY 1**

MAINTENANCE REQUEST For use of this form, see DA PAM 738-750 and 738-751; the proponent agency is DCSLOG	PAGE NO.	NO OF PAGES	REQUIREMENT CONTROL SYMBOL CSGLD-1047(*R1*)

SECTION I - CUSTOMER DATA

1a. UIC CUSTOMER	1b. CUSTOMER UNIT NAME	1c. PHONE NO

2a. SAMS-2 UIC/SAMS-I/TDA	2b. UTILIZATION CODE	2c. MCSR

SECTION II - MAINTENANCE ACTIVITY DATA

3a. WORK ORDER NUMBER (*WON*)	3b. SHOP	3c. PHONE NO

4a. UIC SUPPORT UNIT	4b. SUPPORT UNIT NAME

SECTION III - EQUIPMENT DATA

5. TYPE MNT REQ CODE	6. ID	7. NSN

8. MODEL

9. NOUN

10a. ORG WON/DOC NO	10b. EIC

11 SERIAL NUMBER	12. QTY	13. PD

14. MALFUNCTION DESCRIPTION *(for DSU, GSU/AVIM, DEPOT use)*

15a. FAILURE DETECTED DURING/WHEN DISCOVERED CODE *(Enter code)* - See DA Pamphlet 738-750 and 738-751	

15b. FIRST INDICATION OF TROUBLE/ HOW RECOGNIZED CODE *(Enter Code)* See DA Pamphlet 738-750 and 738-751	16. MILES/KILOMETERS/HOURS/ROUNDS M:	K:
	H:	R:

17. PROJECT CODE *(if assigned)*	18. ACCOUNT PROCESSING CODE	19. IN WARRANTY? *(enter Y or N)* Y	20. ADMIN NO

21. REIMBURSABLE CUSTOMER *(if Intransit customer enter Y or N)* Y	
22. LEVEL OF WORK O	23. SIGNATURE

24. DESCRIBE DEFICIENCIES OR SYMPTOMS ON THE BASIS OF COMPLETE CHECKOUT AND DIAGNOSTIC PROCEDURES IN EQUIPMENT TM *(Do not prescribe repairs)*

25. REMARKS

26. TECHNICAL REFERENCES

SECTION IV - TASK REQUIREMENTS DATA

27a. FILE INPUT ACT CD	27b. TASK NO	27c. ACT CODE	27d. TASK DESCRIPTION	27e. QTY TO BE RPR	27f. WORK CENTER	27g. FAILURE CODE	27h. MH PROJ	27i MH EXP

SECTION V - PART REQUIREMENTS

28a. FILE INPUT ACT CD	28b. TASK NO	28c. ID NO	28d. NSN OR PART NUMBER	28e. SFX CD	28f. QTY RQD	28g. QTY ISSUED	28h. NMCS CD	28i. FAILURE CODE	28j. STORAGE LOCATION	28k. INITIALS	28l. COST $

28m. TOTAL MANHOURS	28n. TOTAL MANHOURS COSTS $	28o. TOTAL PARTS COSTS$	

SECTION VI - COMPLETION DATA

29. QTY RPR	30. QTY CONDEMN	31. QTY NRTS	32. EVAC WON	33. EVAC UNIT NAME

SECTION VII - ACTION SIGNATURES

34a. SUBMITTED BY	35a. ACCEPTED BY	35c. DATE	36a. WORK STARTED BY	37a. INSPECTION BY	38a. PICKED UP BY

34b. DATE	35b. STATUS	35d. TIME	36b. STATUS	36c. DATE	36d. TIME	37b. STATUS	37c. DATE	37d. TIME	38b. STATUS	38c. DATE	38d. TIME

DA FORM 2407, JUL 94 **CONTROL COPY 3**

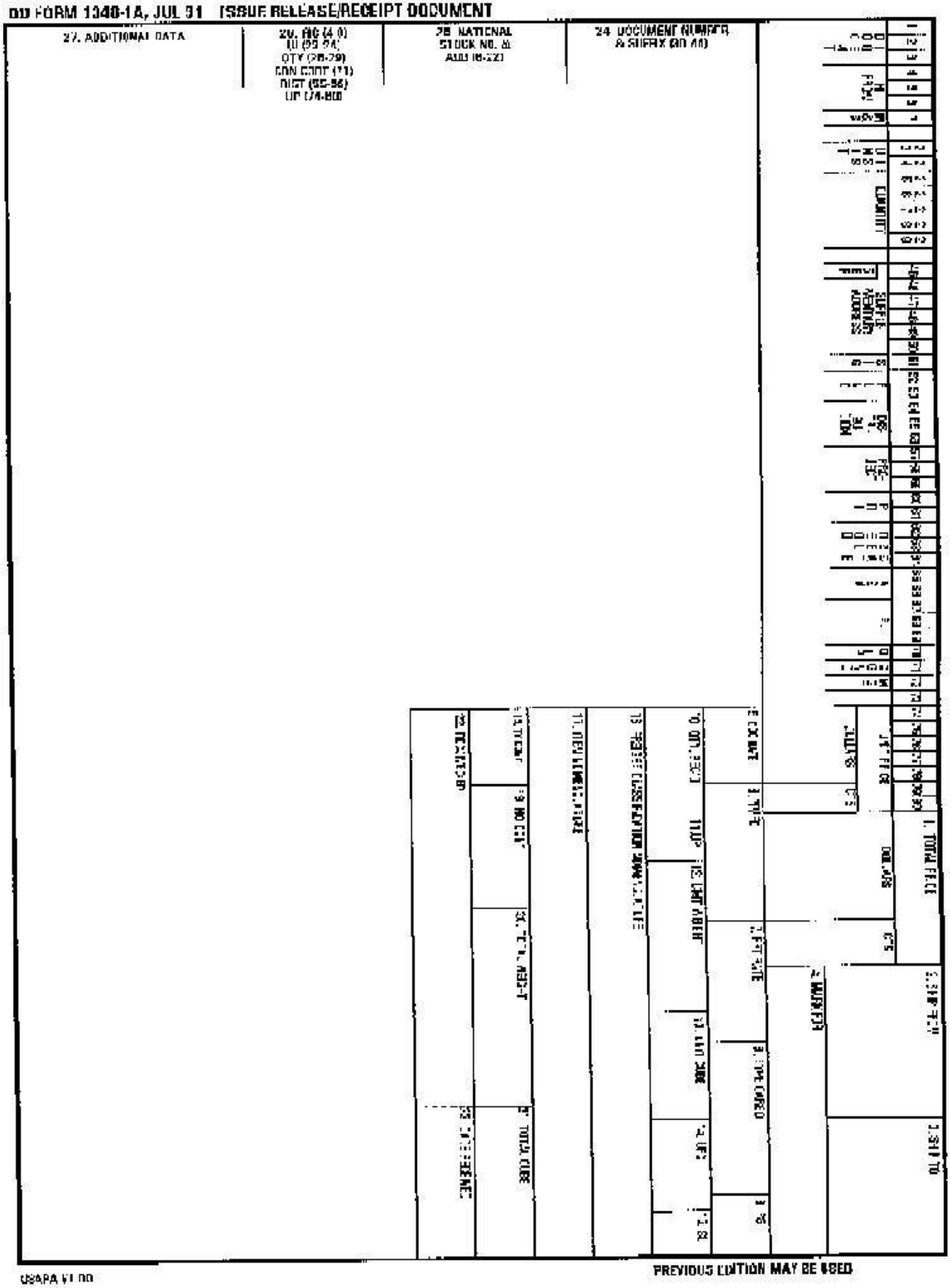
DD FORM 1348-1A, JUL 91 ISSUE RELEASE/RECEIPT DOCUMENT
27. ADDITIONAL DATA
20. RIC (4-6)
UI (99-24)
QTY (25-29)
CON CONT (71)
DIST (55-56)
UP (74-80)
23. NATIONAL STOCK NO. &
24. DOCUMENT NUMBER & SUFFIX (30-44)
PREVIOUS EDITION MAY BE USED
USAPA V1.00

APPENDIX B
MAINTENANCE ALLOCATION CHART (MAC)
(FOR ARMY ONLY)

APPENDIX CONTENTS

		Page
B.1	GENERAL	B-2
B.2	MAINTENANCE FUNCTIONS	B-2
B.2.1	INSPECT	B-2
B.2.2	TEST	B-2
B.2.3	SERVICE	B-2
B.2.4	ADJUST	B-2
B.2.5	ALIGN	B-2
B.2.6	CALIBRATE	B-3
B.2.7	REMOVE/INSTALL	B-3
B.2.8	REPLACE	B-3
B.2.9	REPAIR	B-3
B.2.10	OVERHAUL	B-3
B.2.11	REBUILD	B-3
B.3	EXPLANATION OF COLUMNS IN THE MAC - SECTION II	B-4
B.3.1	COLUMN 1, GROUP NUMBER	B-4
B.3.2	COLUMN 2, COMPONENT/ASSEMBLY	B-4
B.3.3	COLUMN 3, MAINTENANCE FUNCTION	B-4
B.3.4	COLUMN 4, MAINTENANCE LEVEL	B-4
B.3.5	COLUMN 5, TOOLS AND TEST EQUIPMENT REFERENCE CODE	B-4
B.3.6	COLUMN 6, REMARKS	B-4
B.4	EXPLANATION OF COLUMNS IN TOOL AND TEST EQUIPMENT REQUIREMENTS, SECTION III	B-5
B.4.1	COLUMN 1, REFERENCE CODE	B-5
B.4.2	COLUMN 2, MAINTENANCE LEVEL	B-5

B.4.3 COLUMN 3, NOMENCLATURE B-5
B.4.4 COLUMN 4, NATIONAL STOCK NUMBER B-5
B.4.5 COLUMN 5, TOOL NUMBER B-5
B.5 EXPLANATION OF COLUMNS IN REMARKS - SECTION IV B-5
B.5.1 COLUMN 1, REMARKS CODE B-5
B.5.2 COLUMN 2, REMARKS B-5

B.1 GENERAL

This appendix provides a general explanation of all maintenance and repair functions authorized at various maintenance levels under the standard Army Maintenance System concept. The Maintenance Allocation Chart (MAC) designates overall authority and responsibility for the performance of maintenance functions on the identified end item or component. The application of the maintenance functions to the end item or component will be consistent with the capacities and capabilities of the designated maintenance levels, which are shown on the MAC in column (4) as:

Unit - includes two sub columns, C (operator/crew) and O (unit) maintenance.

Intermediate -

Direct Support includes an F sub column.

General Support includes an H sub column.

Depot - includes a D sub column.

Section Ill lists the tools and test equipment (both special tools and common tool sets) required for each maintenance function as referenced from section Il. Section IV contains supplemental instructions and explanatory notes for a particular maintenance function.

B.2 MAINTENANCE FUNCTIONS

Maintenance functions are limited to and defined as follows:

B.2.1 Inspect

To determine the serviceability of an item by comparing its physical, mechanical, and electrical characteristics with established standards through examination (e.g., by sight, sound, or feel).

B.2.2 Test

To verify serviceability by measuring the mechanical, pneumatic, hydraulic, or electrical characteristics of an item and comparing those characteristics with prescribed standards.

B.2.3 Service

Operations required periodically to keep an item in proper operating condition; e.g., to clean (includes decontaminate, when required); to preserve; to drain; to paint; or to replenish fuel, lubricants, chemical fluids, or gases.

B.2.4 Adjust

To maintain or regulate, within prescribed limits, by bringing into proper position or by setting the operating characteristics to specified parameters.

B.2.5 Align

To adjust specified variable elements of an item to bring about optimum or desired performance.

B.2.6 Calibrate

To determine and cause corrections to be made or to be adjusted on instruments or test, measuring, and diagnostic equipment used in precision measurement. Consists of comparisons of two instruments, one of which is a certified standard of known accuracy, to detect and adjust any discrepancy in the accuracy of the instrument being compared.

B.2.7 Remove/Install

To remove and install the same item when required to perform service or other maintenance functions. Install may be the act of emplacing, seating, or fixing into position a spare, repair part, or module (component or assembly) in a manner to allow the proper functioning of an equipment or system.

B.2.8 Replace

To remove an unserviceable item and install a serviceable counterpart in its place. The MAC authorizes "Replace" and assigned maintenance level is shown as the 3rd position of the SM&R code.

B.2.9 Repair

The application of maintenance services includes fault location/troubleshooting, removal/installation, and disassembly/assembly procedures, and maintenance actions to identify troubles and restore serviceability to an item by correcting specific damage, fault, malfunction, or failure in a part, subassembly, module (component or assembly), end item, or system.

B.2.10 Overhaul

The maintenance effort (service/action) prescribed to restore an item to a completely serviceable/operational condition as required by maintenance standards in appropriate technical publications (i.e., DMWR). Overhaul is normally the highest degree of maintenance performed by the Army. Overhaul does not normally return an item to like new condition.

B.2.11 Rebuild

Consists of those services/actions necessary for the restoration of unserviceable equipment to a like new condition in accordance with original manufacturing standards. Rebuild is the highest degree of materiel maintenance applied to Army equipment. The rebuild operation includes the act of returning to zero those age measurements (e.g., hours/miles) considered in classifying Army equipment and components.

NOTE

Services - Inspect, test, service, adjust, align, calibrate, and/or replace.

Fault Isolation/troubleshooting - The process of investigating and detecting the cause of equipment malfunctioning; the act of isolating a fault within a system or unit under test (UUT).

Disassembly/assembly - The step-by-step breakdown (taking apart) of a spare/functional group coded item to the level of its least component, that is assigned an SMR code for the level of maintenance under consideration (i.e., These are identified as maintenance significant).

Actions - Welding, grinding, riveting, straightening, facing, machining, and resurfacing.

B.3 EXPLANATION OF COLUMNS IN THE MAC - SECTION II

B.3.1 Column 1, Group Number

Column 1 lists functional group code numbers, the purpose of which is to identify maintenance significant components, assemblies, subassemblies, and modules with the next higher assembly.

B.3.2 Column 2, Component/Assembly

Column 2 lists the item names of components, assemblies, subassemblies, and modules for which maintenance is authorized.

B.3.3 Column 3, Maintenance Function

Column 3 lists the functions to be performed on the item listed in column 2. (For detailed explanation of these functions, see paragraph B.2).

B.3.4 Column 4, Maintenance Level

Column 4 specifies each level of maintenance authorized to perform each function listed in column 3, by indicating work-time required (expressed as man-hours in whole hours or decimals) in the appropriate sub column. This work-time figure represents the active time required to perform that maintenance function at the indicated level of maintenance. If the number or complexity of the tasks within the listed maintenance function vary at different maintenance levels, appropriate work-time figures are to be shown for each level. The work-time figure represents the average time required to restore an item (assembly, subassembly, component, module, end item, or system) to a serviceable condition under typical field operating conditions. This time includes preparation time (including any necessary disassembly and assembly time), troubleshooting and fault location time, and quality assurance time in addition to the time required to perform the specific tasks identified for the maintenance functions authorized in the maintenance allocation chart. The symbol designations for the various maintenance levels are as follows:

C	Operator or crew maintenance
O	Unit maintenance
F	Direct support maintenance
L	Specialized repair activity (SRA)[1]
H	General support maintenance
D	Depot maintenance

B.3.5 Column 5, Tools and Test Equipment Reference Code

Column 5 specifies, by code, those common tool sets (not individual tools), common TMDE, special tools, special TMDE, and special support equipment required to perform the designated function. Codes are keyed to tools and test equipment in section III.

B.3.6 Column 6, Remarks

When applicable, this column contains a letter code in alphabetical order, which is keyed to the remarks contained in section IV.

NOTE

This maintenance level is not included in section II, column (4) of the Maintenance Allocation Chart. Functions to this level of maintenance are identified by a work-time figure in the “H" column of section II, column (4), and an associated reference code is used in the Remarks column (6). This code is keyed to section IV, Remarks, and the SRA complete repair application is explained there.

B.4 EXPLANATION OF COLUMNS IN TOOL AND TEST EQUIPMENT REQUIREMENTS, SECTION III

B.4.1 Column 1, Reference Code

The tool and test equipment reference code correlates with a code used in the MAC, section II, column 5.

B.4.2 Column 2, Maintenance Level

The lowest level of maintenance authorized to use the tool or test equipment.

B.4.3 Column 3, Nomenclature

Name or identification of the tool or test equipment.

B.4.4 Column 4, National Stock Number

The national stock number of the tool or test equipment.

B.4.5 Column 5, Tool Number

The manufacturer's part number, model number, or type number.

B.5 EXPLANATION OF COLUMNS IN REMARKS - SECTION IV

B.5.1 Column 1, Remarks Code

The code recorded in column 6, section ll.

B.5.2 Column 2, Remarks

This column lists information pertinent to the maintenance function being performed as indicated in the MAC, section ll.

B-1. Maintenance Allocation Chart for M94 Muzzle Velocity System

(1) Group Number	(2) Component Assembly	(3) Maint. Function	(4) Maintenance Level					(5) Tools and Equip.	(6) Remarks
			Unit		Intermediate		Depot		
					DS	GS			
			C	O	F	H	D		
00	M94 MUZZLE VELOCITY	Inspect	0.5	0.5	0.5				
	SYSTEM	Test	1.0	1.0	1.0				
	12950094	Replace		0.5					
		Repair	0.1	0.1	2.0				
		Overhaul					36.0		
01	CONTROL PROCESSOR AND	Inspect	0.1	0.1	0.5				
	DISPLAY UNIT (CDPU)	Test		0.5	0.5				
	AY6706709-0	Replace		0.5	0.2				
		Repair			2.0				
		Overhaul					4.0		
0101	POWER SUPPLY	Inspect			0.1				
	ASSEMBLY	Test			0.2		0.5		
	AY6706704-0	Replace			0.5				
		Repair					48.0		
010101	POWER SUPPLY CCA	Inspect					0.5		
	AY6706612-0	Test					2.0		
		Replace					1.0		
		Repair					4.0		
0102	MVP CCA	Inspect			0.1				
	AY6706703-0	Test			0.2		1.0		
		Replace			0.5		1.0		
		Repair					4.0		

Maintenance Allocation Chart for M94 Muzzle Velocity System (Cont)

(1) Group Number	(2) Component Assembly	(3) Maint. Function	(4) Maintenance Level					(5) Tools and Equip.	(6) Remarks
			Unit		Intermediate		Depot		
					DS	GS			
			C	O	F	H	D		
0103	PANEL, FRONT	Inspect			0.1				
	ASSEMBLY	Test					1.0		
	AY6706708-0	Replace					1.0		
		Repair					4.0		
0104	COVER ASSEMBLY	Inspect			0.1				
	AM6706693-0	Repair			0.4				
0105	MOTHERBOARD	Inspect			0.2		1.0		
	AY6706706-0	Test					2.0		
		Replace			1.0		1.0		
		Repair					4.0		
0106	DISPLAY MODULE	Inspect			0.5				
	AY6706702-0	Test			0.5				
		Replace			1.0				
		Repair							
0107	KEYBOARD CCA	Inspect			0.5				
	AY6704586-0	Test			0.5				
		Replace			1.0				
		Repair							
0108	EMI MODULE	Inspect			0.5				
	AY6706705-1	Test			0.5				
		Replace			1.0				
		Repair			2.0				
0109	HARNESS ASSY	Inspect			0.5				
	WA6706707-0	Test			0.5				
		Replace			1.0				
		Repair			1.5				

Maintenance Allocation Chart for M94 Muzzle Velocity System (Cont)

(1) Group Number	(2) Component Assembly	(3) Maint. Function	(4) Maintenance Level					(5) Tools and Eqpt	(6) Remarks
			Unit		Intermediate		Depot		
					DS	GS			
			C	O	F	H	D		
02	TRANSCEIVER ASSY	Inspect		0.1	0.1		1.0		
	AY6706571-0,	Test		0.5			2.0		
	AY6706571-2	Replace		0.2			1.0		
		Repair					8.0		
0201	Power Supply Module	Inspect					1.0		
	AY6706620-0	Test					2.0		
		Replace					1.0		
		Repair					8.0		
020101	POWER SUPPLY CCA	Inspect					1.0		
	AY6706619-0	Test					2.0		
		Replace					1.0		
		Repair					8.0		
0202	DOPPLER AMPLIFIER CCA	Inspect					1.0		
	AY6706566-0	Test					2.0		
		Replace					1.0		
		Repair					8.0		
03	BRACKET ASSEMBLY	Inspect		0.1					
	12922098	Replace		0.5					
		Repair		0.2					
04	INTERCONNECTION CABLE	Inspect		0.1	0.2				
	WA6706719-0	Replace		0.1	0.7				
		Repair			2.0				

Maintenance Allocation Chart for M94 Muzzle Velocity System (Cont)

(1) Group Number	(2) Component Assembly	(3) Maint. Function	(4) Maintenance Level					(5) Tools and Eqpt	(6) Remarks
			Unit		Intermediate		Depot		
					DS	GS			
			C	O	F	H	D		
05	POWER CABLE	Inspect		0.1	0.2				
	WA6706717-0	Replace		0.1	0.7				
		Repair			2.0				
06	SECONDARY POWER SOURCE CABLE	Inspect		0.1	0.2				
	WA6708023-0	Replace		0.1	0.7				
		Repair			2.0				
07	POWER ADAPTER	Inspect		0.1	0.5				
	WA6706718-0	Test			0.5				
		Replace		0.1	1.0				
		Repair			1.0				
08	TRANSIT CASE	Inspect			0.1				
	AM6706714-0	Replace			0.1				
		Repair			1.0				

Maintenance Allocation Chart for M94 Muzzle Velocity System (Cont)

(1) Group No.	(2) Component Assembly	(3) Maint. Function	(4) Unit		Intermediate		Depot	(5) Tools and Equip.	(6) Remarks
					DS	GS			
			C	O	F	H	D		
15	MVS Communication Adapter AY20412152	Inspect	0.1	0.1	0.1				
		Test			1.0				
		Replace		0.5	0.5				
		Repair			2.0				
		Overhaul					5.0		
16	CPU Circuit Card Assembly AY20412143	Inspect					0.5		
		Test					2.0		
		Replace					1.0		
		Repair					5.0		
17	EMI-Filter Circuit Card Assembly AY20412144	Inspect					0.5		
		Test							
		Replace					2.0		
		Repair					3.0		
18	Switch Assembly AY20412557	Inspect					0.5		
		Test							
		Replace					2.0		
		Repair					3.0		
19	MCA-MVS Cable AY20410634	Inspect		0.1	0.2				
		Test			1.0				
		Replace			0.5				
		Repair			2.0				
20	MCA- CCA Cable AY20412122	Inspect		0.1	0.2				
		Test			1.0				
		Replace			0.5				
		Repair			2.0				

APPENDIX C

REPAIR PARTS AND SPECIAL TOOLS LIST

APPENDIX CONTENTS

Title		Page
SECTION I.	INTRODUCTION	C-1
SECTION II.	PARTS LIST	C-10
SECTION III.	SPECIAL SUPPORT EQUIPMENT	C-143
SECTION IV	CROSS REFERENCE INDEXES	C-155

SECTION I.

INTRODUCTION

SECTION CONTENTS

Subject		Page
C.1	GENERAL	C-1
C.2	RPSTL DESCRIPTION	C-1
C.3	EXPLANATION OF COLUMNS (SECTIONS II AND III)	C-2
C.4	EXPLANATION OF COLUMNS (SECTION IV).	C-7
C.5	HOW TO LOCATE REPAIR PARTS	C-9

C.1 GENERAL

This Repair Parts and Special Tools List (RPSTL) lists and authorizes spares and repair parts; special tools; special test, measurement, and diagnostic equipment (TMDE); and other special support equipment required for performance of unit, direct support, and general support maintenance of the M94 MVS. It authorizes the requisitioning, issue, and disposition of spares, repair parts and special tools as indicated by the source, maintenance, and recoverability (SM&R) codes.

C.2 RPSTL DESCRIPTION

This RPSTL is divided into the following sections:

C.2.1 Section I – Introduction

The Introduction describes the various sections that are contained in the RPSTL and explains the contents of various tables, codes, and indexes.

C.2.2 Section II - Repair Parts List

This is a list of spares and repair parts authorized by this RPSTL for use in the performance of maintenance. The list also includes parts which must be removed for replacement of the authorized parts. Parts lists are composed of functional groups in ascending alphanumeric sequence, with the parts in each group listed in ascending figure and item number sequence. Bulk materials are listed by item name in FIG BULK at the end of the section. Repair parts kits or sets are listed separately in their own functional group within Section II. Repair parts for repairable special tools are also listed in this section.

C.2.3 Section III - Special Tools List

This is a list of special tools, special TMDE, and other special support equipment authorized by this RPSTL (as indicated by basis of issue (BOI) information in DESCRIPTION AND USABLE ON CODE (UOC) column) for the performance of maintenance.

C.2.4 Section IV - Cross-reference Indexes

This is a list, in national item identification number (NIIN) sequence, of all National stock numbered items appearing in the listing, followed by a list in alphanumeric sequence of all part numbers appearing in the listing. National stock numbers and part numbers are cross-referenced to each illustration figure and item number appearance. The figure and item number index lists figure and item numbers in alphanumeric sequence and cross-references NSN, CAGEC, and part numbers.

C.3 EXPLANATION OF COLUMNS (SECTIONS II AND III)

C.3.1 Item No. (Column 1)

Indicates the number used to identify items called out in the illustration.

C.3.2 SM&R Code (Column 2)

The source, maintenance, and recoverability (SM&R) code is a five-position code containing supply and requisitioning information, maintenance level authorization criteria, and disposition instructions, as shown in the following breakout:

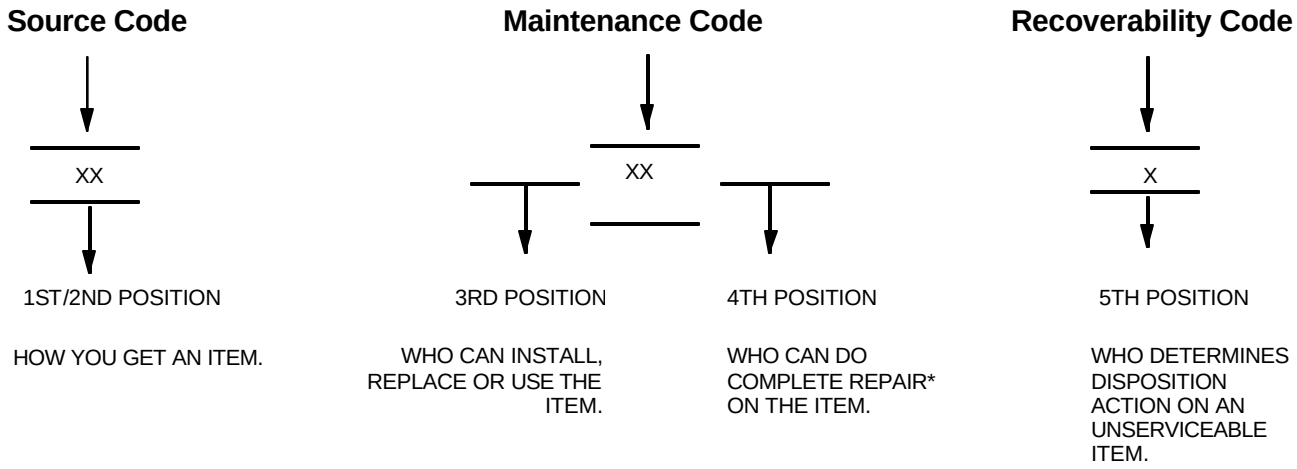

*COMPLETE REPAIR: MAINTENANCE CAPACITY, CAPABILITY, AND AUTHORITY TO PERFORM ALL CORRECTIVE MAINTENANCE TASKS OF THE “REPAIR" FUNCTION IN A USE/USER ENVIRONMENT IN ORDER TO RESTORE SERVICEABILITY TO A FAILED ITEM.

C.3.2.1 Source Code

The source code tells you how to get an item needed for maintenance, repair, or overhaul of an end item or equipment item. Explanations of source codes follow:

CODE	EXPLANATION
PA PB PC** PD PE PF PG	STOCKED ITEMS; USE THE APPLICABLE NSN TO REQUISITION ITEMS WITH THESE SOURCE CODES. THEY ARE AUTHORIZED TO THE LEVEL INDICATED BY THE CODE ENTERED IN THE THIRD POSITION OF THE SM&R CODE. **NOTE: ITEMS CODED PC ARE SUBJECT TO DETERIORATION.
KD KF KB	ITEMS WITH THESE CODES ARE NOT TO BE REQUESTED/REQUISITIONED INDIVIDUALLY. THEY ARE PART OF A KIT WHICH IS AUTHORIZED TO THE MAINTENANCE LEVEL INDICATED IN THE THIRD POSITION OF THE SM&R CODE. THE COMPLETE KIT MUST BE REQUISITIONED AND APPLIED.
MO - (MADE AT UNIT AVUM LEVEL) MF - (MADE AT DS/ AVIM LEVEL) MH - (MADE AT GS LEVEL) ML - (MADE AT SRA LEVEL) MD - (MADE AT DEPOT LEVEL)	ITEMS WITH THESE CODES ARE NOT TO BE REQUESTED/REQUISITIONED INDIVIDUALLY. THEY MUST BE MADE FROM BULK MATERIAL WHICH IS IDENTIFIED BY THE PART NUMBER IN THE DESCRIPTION AND USABLE ON CODE (UOC) COLUMN AND LISTED IN THE BULK MATERIAL GROUP OF THE REPAIR PARTS LIST IN THIS RPSTL. IF THE ITEM IS AUTHORIZED TO YOU BY THE THIRD POSITION CODE OF THE SM&R CODE, BUT THE SOURCE CODE INDICATES IT IS MADE AT A HIGHER LEVEL, ORDER THE ITEM FROM THE HIGHER LEVEL OF MAINTENANCE.

AO - (ASSEMBLED BY UNIT/AVUM LEVEL)

AF - (ASSEMBLED BY DS/AVIM LEVEL)

AH - (ASSEMBLED BY GS LEVEL)

AL - (ASSEMBLED BY SRA LEVEL)

AD - (ASSEMBLED BY DEPOT LEVEL)

ITEMS WITH THESE CODES ARE NOT TO BE REQUESTED OR REQUISITIONED INDIVIDUALLY. THE PARTS THAT MAKE UP THE ASSEMBLED ITEM MUST BE REQUISITIONED OR FABRI CATED AND ASSEMBLED AT THE LEVEL OF MAINTENANCE INDICATED BY THE SOURCE CODE. IF THE THIRD POSITION CODE OF THE SM&R CODE AUTHORIZES YOU TO REPLACE THE ITEM, BUT THE SOURCE CODE INDICATES THE ITEM IS ASSEMBLED AT A HIGHER LEVEL, ORDER THE ITEM FROM THE HIGHER LEVEL OF MAINTENANCE.

XA - DO NOT REQUISITION AN "XA"-CODED ITEM. ORDER ITS NEXT HIGHER ASSEMBLY. (ALSO, REFER TO THE NOTE BELOW.)

XB - IF AN "XB" ITEM IS NOT AVAILABLE FROM SALVAGE, ORDER IT USING THE CAGEC AND PART NUMBER GIVEN.

XC - INSTALLATION DRAWING, DIAGRAM, INSTRUCTION SHEET, FIELD SERVICE DRAWING, THAT IS IDENTIFIED BY MANUFACTURER'S PART NUMBER.

XD - ITEM IS NOT STOCKED. ORDER AN "XD"-CODED ITEM THROUGH NORMAL SUPPLY CHANNELS USING THE CAGEC AND PART NUMBER GIVEN, IF NO NSN IS AVAILABLE.

NOTE:
CANNIBALIZATION OR CONTROLLED EXCHANGE, WHEN AUTHORIZED, MAY BE USED AS A SOURCE OF SUPPLY FOR ITEMS WITH THE ABOVE SOURCE CODES, EXCEPT FOR THOSE SOURCE CODED "XA" OR THOSE AIRCRAFT SUPPORT ITEMS RESTRICTED BY REQUIREMENTS OF AR 750-1.

C.3.2.2 Maintenance Code

Maintenance codes tell you the level(s) of maintenance authorized to use and repair support items. The maintenance codes are entered in the third and fourth positions of the SM&R code as follows: The maintenance code entered in the third position tells you the lowest maintenance level authorized to remove, replace, and use an item. The maintenance code entered in the third position will indicate authorization to one of the following levels of maintenance.

Code	Application/Explanation
C	Crew or operator maintenance done within unit or aviation unit maintenance.
O	Unit or aviation unit level can remove, replace, and use the item.
F	Direct support or aviation intermediate level can remove, replace, and use the item.
H	General support level can remove, replace, and use the item.
L	Specialized repair activity (SRA) can remove, replace, and use the item.
D	Depot level can remove, replace, and use the item.

The maintenance code entered in the fourth position tells whether or not the item is to be repaired and identifies the lowest maintenance level with the capability to do complete repair (i.e., perform all authorized repair functions). (**NOTE:** Some limited repair may be done on the item at a lower level of maintenance, if authorized by the Maintenance Allocation Chart (MAC) and SM&R codes). This position will contain one of the following maintenance codes.

Code	Application/Explanation
O	Unit or aviation unit is the lowest level that can do complete repair of the item.
F	Direct support or aviation intermediate is the lowest level that can do complete repair of the item.
H	General support is the lowest level that can do complete repair of the item.
L	Specialized repair activity is the lowest level that can do complete repair of the item.
D	Depot is the lowest level that can do complete repair of the item.
Z	Nonrepairable. No repair is authorized.
B	No repair is authorized. No parts or special tools are authorized for the maintenance of the "B" coded item. However, the item may be reconditioned by adjusting, lubricating, etc., at the user level.

C.3.2.3 Recoverability Code

Recoverability codes are assigned to items to indicate the disposition action on unserviceable items. The recoverability code is entered in the fifth position of the SM&R code as follows:

Recoverability Code	Application/Explanation
Z	Nonreparable item. When unserviceable, condemn and dispose of the item at the level of maintenance shown in third position of SM&R code.
O	Reparable item. When uneconomically reparable, condemn and dispose of the item at the unit or aviation unit level.
F	Reparable item. When uneconomically reparable, condemn and dispose of the item at the direct support or aviation intermediate level.
H	Reparable item. When uneconomically reparable, condemn and dispose of the item at the general support level.
D	Reparable item. When beyond lower level repair capability, return to depot. Condemnation and disposal of item not authorized below depot level.
L	Reparable item. Condemnation and disposal not authorized below specialized repair activity (SRA).
A	Item requires special handling or condemnation procedures because of specific reasons (e.g., precious metal content, high dollar value, critical material, or hazardous material). Refer to appropriate manuals and directives for specific instructions.

C.3.3 CAGEC (Column 3)

The Contractor and Government Entity Code (CAGEC) is a five-digit numeric code which is used to identify the manufacturer, distributor, or government agency, etc., that supplies the item.

C.3.4 Part Number (Column 4)

Indicates the primary number used by the manufacturer (individual, company, firm, corporation, or Government activity), which controls the design and characteristics of the item by means of its engineering drawings, specifications standards, and inspection requirements to identify an item or range of items.

NOTE

When you use an NSN to requisition an item, the item you receive may have a different part number from the part ordered.

C.3.5 Description and Usable on Code (UOC) (Column 5)

This column includes the following information:

One. The Federal item name and, when required, a minimum description to identify the item.

Two. The physical security classification of the item is indicated by the parenthetical entry which is a physical security classification abbreviation, e.g., Phy Sec C1 (C)-Confidential, Phy Sec 01 (5)-Secret, Phy Sec C1 (T)-Top Secret.

Three. Items that are included in kits and sets are listed below the name of the kit or set.

Four. Spare/repair parts that make up an assembled item are listed immediately following the assembled item line entry.

Five. Part numbers for bulk materials are referenced in this column in the line item entry for the item to be manufactured/fabricated.

Six. When the item is not used with all serial numbers of the same model, the effective serial numbers are shown on the last line(s) of the description (before UOC).

Seven. The usable on code, when applicable (see paragraph 5, Special Information).

Eight. In the special tools list section, the basis of issue (BOI) appears as the last line(s) in the entry for each special tool, special TMDIE, and other special support equipment. When density of equipment supported exceeds density spread indicated in the basis of issue, the total authorization is increased proportionally.

Nine. The statement “END OF FIGURE” appears just below the last item description in Column 5 for a given figure in both Section II and Section III.

C.3.6 Qty (Column 6)

The QTY (quantity per figure column) indicates the quantity of the item used in the breakout shown on the illustration figure, which is prepared for a functional group, sub functional group, or an assembly. A “V” appearing in this column in lieu of a quantity indicates that the quantity is variable and the quantity may vary from application to application.

C.4 EXPLANATION OF COLUMNS (SECTION IV)

C.4.1 National Stock Number (NSN) Index

NSN Index columns and entries are described in the paragraph below.

C.4.1.1 Stock Number Column

This column lists the NSN by national item identification number (NIIN) sequence. The NIIN consists of the last nine digits of the NSN. When using this column to locate an item, ignore the first four digits of the NSN. However, the complete NSN should be used when ordering items by stock number.

C.4.1.2 FIG. Column

This column lists the number of the figure where the item is identified/ located. The figures are in numerical order in Section II and Section III.

C.4.1.3 ITEM Column

The item number identifies the item associated with the figure listed in the adjacent Fig. column. This item is also identified by the NSN listed on the same line.

C.4.2 Part Number Index

Part numbers in this index are listed by part number in ascending alphanumeric sequence (i.e., vertical arrangement of letter and number combination which places the first letter or digit of each group in order A through Z, followed by the numbers 0 through 9, and each following letter or digit in like order).

C.4.2.1 CAGEC Column

The Contractor and Government Entity Code (CAGEC) is a five-digit numeric code used to identify the manufacturer, distributor, or Government agency, etc., that supplies the item.

C.4.2.2 PART NUMBER Column

Indicates the primary number used by the manufacturer (individual, firm, corporation, or Government activity), which controls the design and characteristics of the item by means of its engineering drawings, specifications standards, and inspection requirements to identify an item or range of items.

C.4.2.3 STOCK NUMBER Column

This column lists the NSN for the associated part number and manufacturer identified in the PART NUMBER and CAGEC columns to the left.

C.4.2.4 FIG. Column

This column lists the number of the figure where the item is identified/located in Sections II and III.

C.4.2.5 ITEM Column

The item number is that number assigned to the item as it appears in the figure referenced in the adjacent figure number column.

C.4.3 Figure and Item Number Index

Figure and Item Number Index columns and entries are described in the paragraph below.

C.4.3.1 FIG. Column

This column lists the number of the figure where the item is identified/located in Sections II and III.

C.4.3.2 ITEM Column

The item number is that number assigned to the item as it appears in the figure referenced in the adjacent figure number column.

C.4.3.3 STOCK NUMBER Column

This column lists the NSN for the item.

C.4.3.4 CAGEC Column

The Contractor and Government Entity Code (CAGEC) is a five-digit numeric code used to identify the manufacturer, distributor, or Government agency, etc., that supplies the item.

C.4.3.5 PART NUMBER Column

Indicates the primary number used by the manufacturer (individual, firm, corporation, or Government activity), which controls the design and characteristics of the item by means of its engineering drawings, specifications standards, and inspection requirements to identify an item or range of items.

C.5 HOW TO LOCATE REPAIR PARTS

C.5.1 When national stock number or part number is not known:

One. Using the table of contents, determine the assembly group or subassembly group to which the item belongs. This is necessary since figures are prepared for assembly groups and subassembly groups, and listings are divided into the same groups.

Two. Find the figure covering the assembly group or subassembly group to which the item belongs.

Three. Identify the item on the figure and use the Figure and Item Number Index to find the NSN.

C.5.2 When national stock number or part number is known:

One. Using the National Stock Number or the Part Number Index, find the pertinent National Stock Number or Part Number. The NSN index is in National Item Identification Number (NIIN) sequence. The part numbers in the Part Number index are listed in ascending alphanumeric sequence. Both indexes cross-reference you to the illustration/figure and item number of the item you are looking for.

Two. Turn to the figure and item number, verify that the item is the one you are looking for, then locate the item number in the repair parts list for the figure.

SECTION II.

PARTS LIST

SECTION CONTENTS

Figure		Title Page
C-1	M94 Muzzle Velocity System, P/N 12950094	11
C-2	Control Processor Display Unit (CPDU), P/N AY6706709-0	17
C-3	CPDU Front Panel Assembly, P/N AY6706708-0	20
C-4	Power Supply Module, P/N AY6706704-0	24
C-4	Power Supply Module, P/N AY6706704-0	25
C-5	Motherboard CCA, P/N AY6706706-0	28
C-6	CPDU Muzzle Velocity Processor CCA, P/N AY6706703-0	31
C-7	EMI Module, P/N AY6706705-1	41
C-8	Keyboard CCA, P/N AY6704586-0	45
C-9	CPDU Display Module, P/N AY6706702-0	47
C-10	Power Supply CCA, P/N AY6706612-0	51
C-11	Transceiver Assy, P/N AY6706571-0	67
C-12	Doppler Amplifier CCA, P/N AY6706566-0	75
C-13	Power Supply Module, P/N AY6706620-0	80
C-14	Power Supply CCA, P/N AY6706619-0	84
C-15	Mounting Bracket Assembly, P/N 12922098	90
C-16	Interconnection Cable (30-Meter), P/N WA6706719-0	93
C-17	Power Cable (50-Meter), P/N WA6706717-0	96
C-18	Secondary Power Source Cable, P/N WA6708023-0	99
C-19	Power Adapter, P/N WA6706718-0	102
C-20	Carrying Case, P/N AM6706714-0	105
C-21	Cable Drum, P/N AY6707950-0	108
C-22	CPDU Harness Assembly, P/N WA6706707-0	111
C-23	Doppler Simulator, P/N AY6706690-0	114
C-24	Modulator Sub-assembly, P/N AY6706689-0	117
C-25	Doppler Simulator CCA, P/N AY6706676-0	119
C-26	RF CCA P/N AY6706677-0	3-142
C-27	MCA W/CASE AND CABLES P/N 11838876	3-146
C-28	CONVERTER-STORER (MCA) P/N AY20412152	3-148
C-29	CPU CCA P/N AY20412143	3-151
C-30	EMI Filter CCA P/N AY20412144	3-155
C-31	Switch Assembly P/N AY20412557	3-157
C-32	Cable Assembly (MCA-CCA) P/N AY20412122	3-159
C-33	Cable Assembly (MCA-MVS) P/N AY20410634	3-161
C-34	Special Support Equipment	3-165

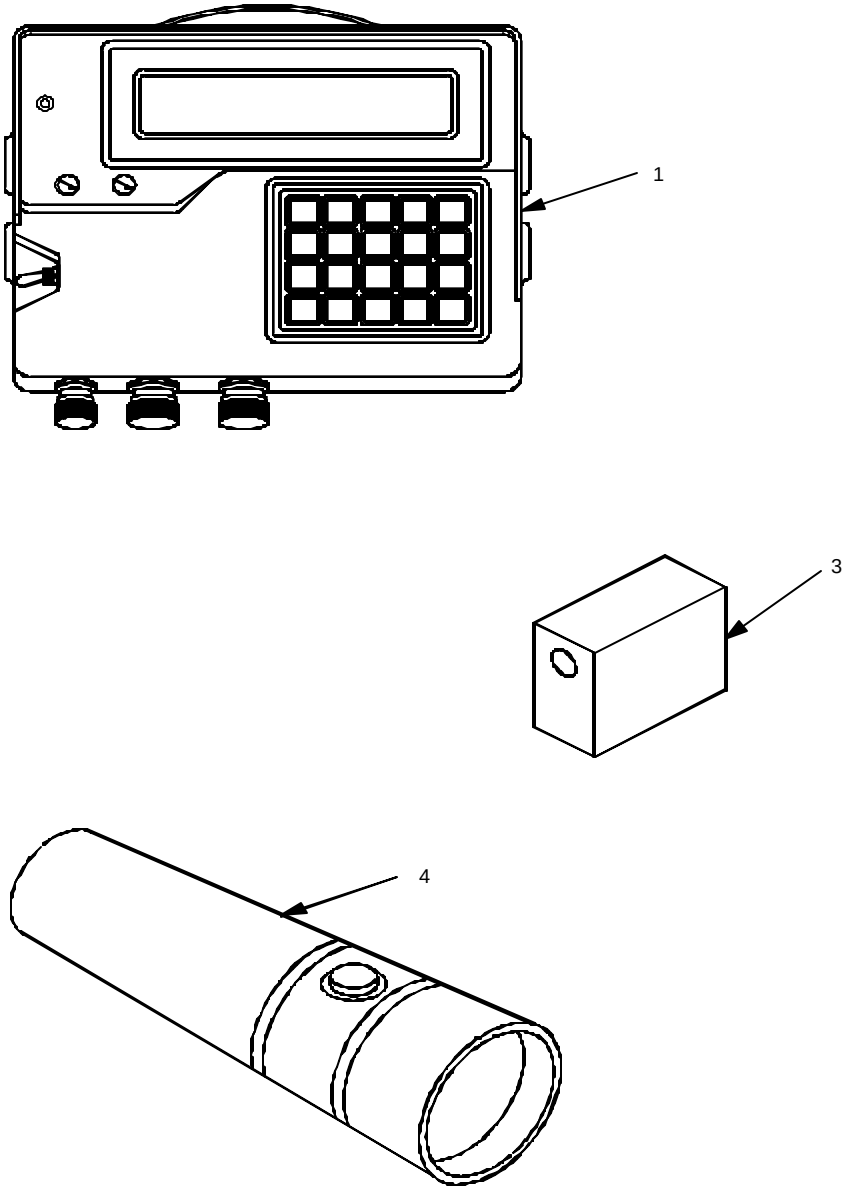

Figure C-1. M94 Muzzle Velocity System, P/N 12950094 (Sheet 1 of 4)

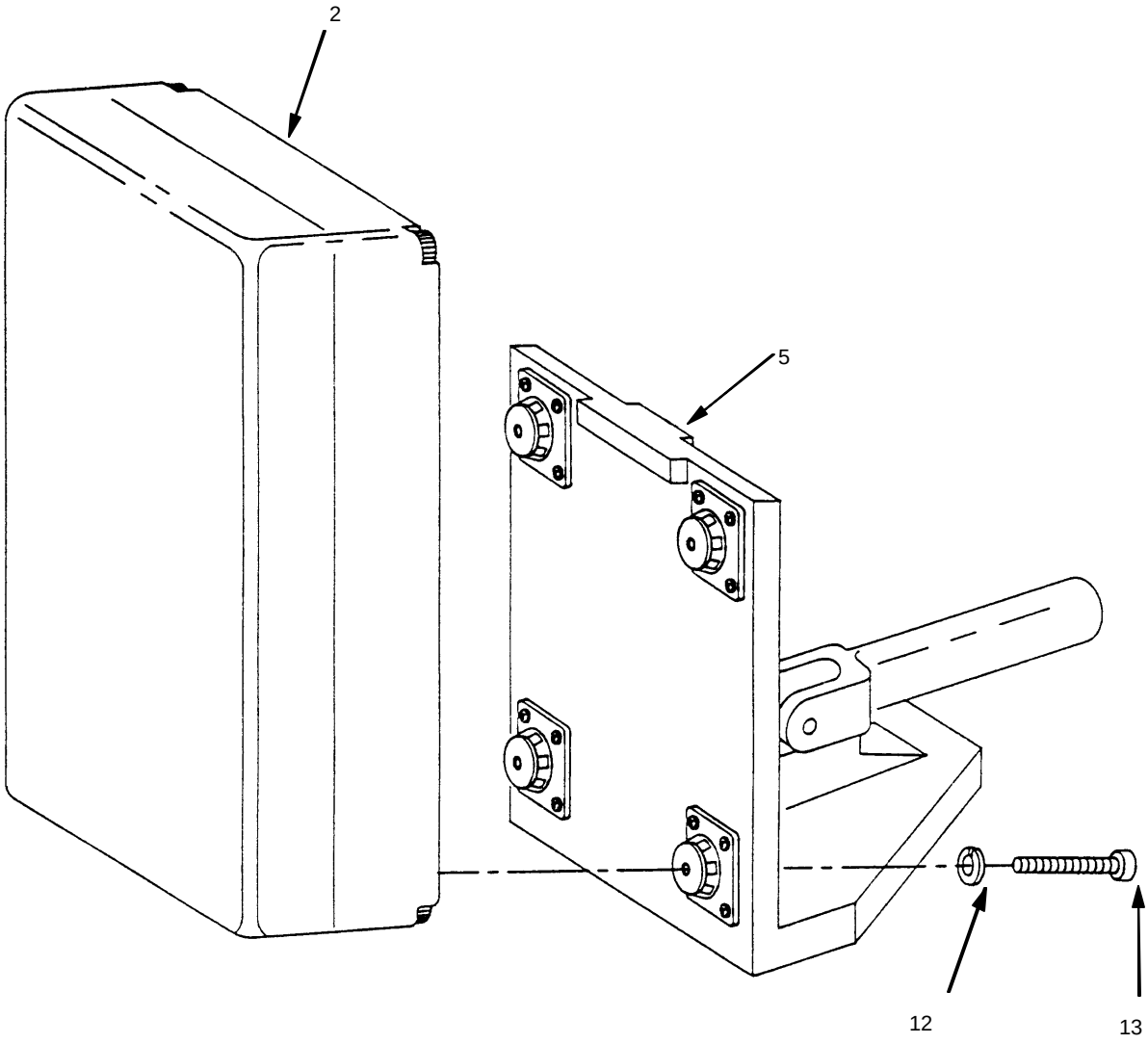

Figure C-1. M94 Muzzle Velocity System, P/N 12950094 (Sheet 2 of 4)

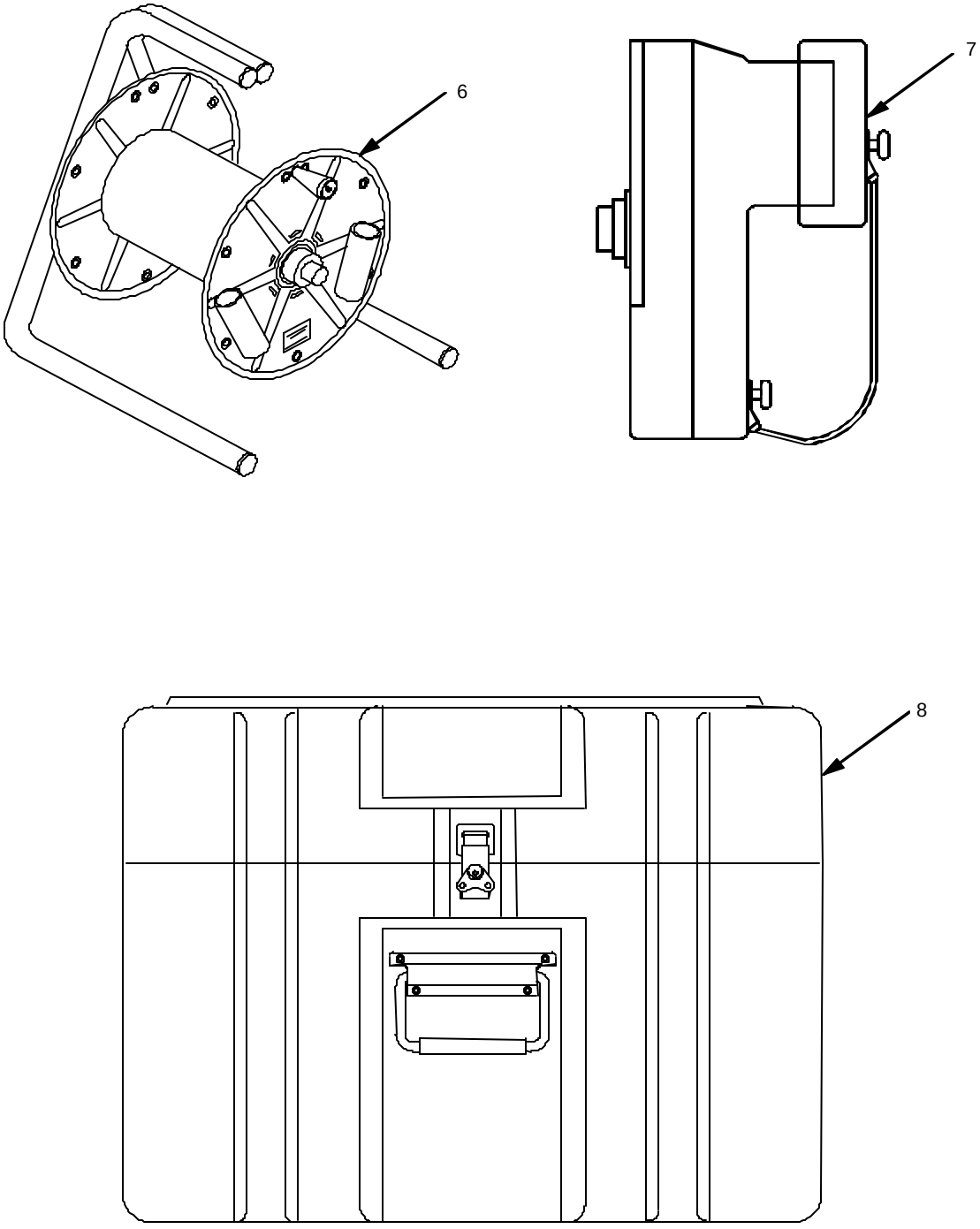

Figure C-1. M94 Muzzle Velocity System, P/N 12950094 (Sheet 3 of 4)

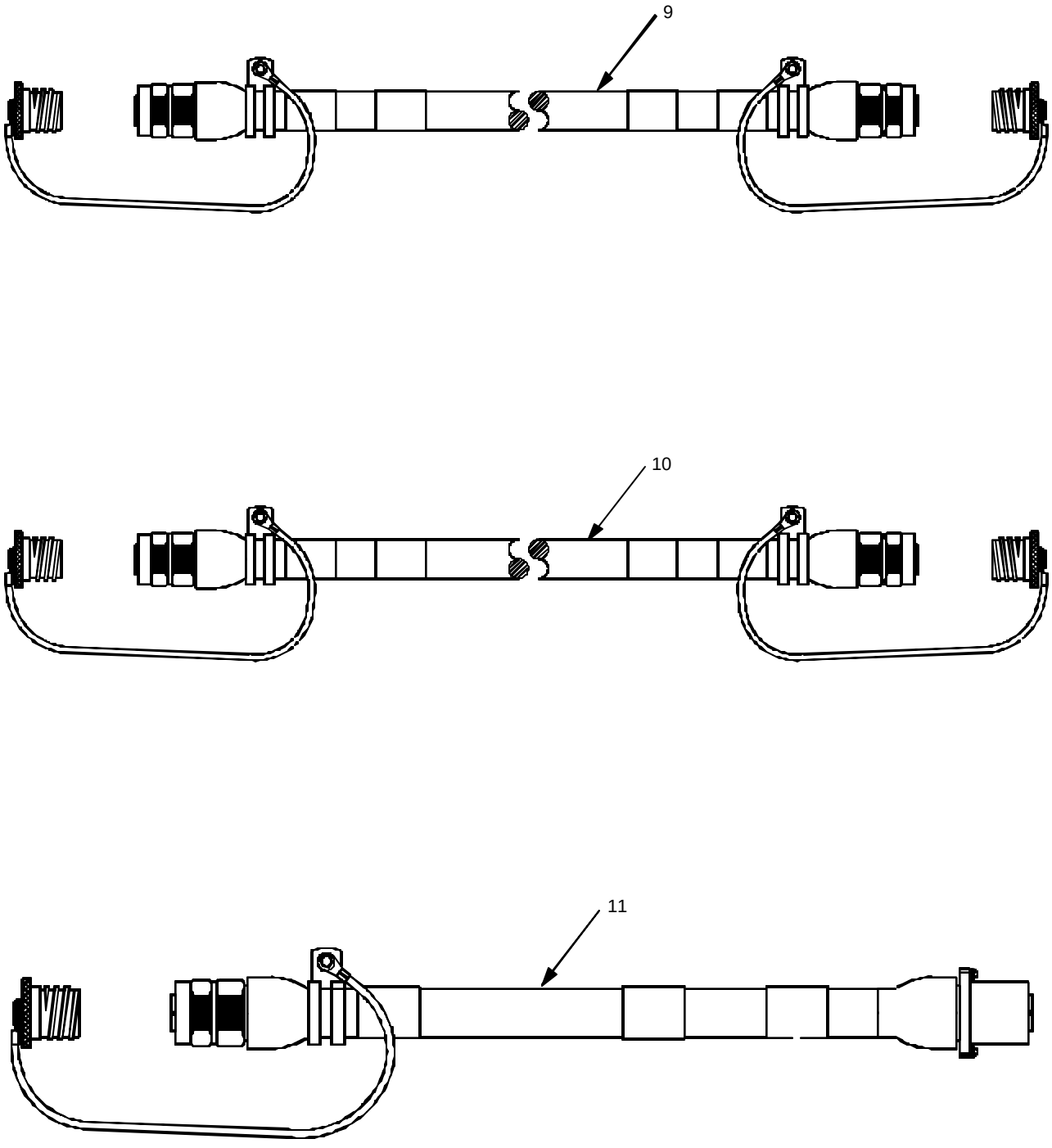

Figure C-1. M94 Muzzle Velocity System, P/N 12950094 (Sheet 4 of 4)

Table C-1. M94 Muzzle Velocity System, P/N 12950094 (Sheet 1 of 2)

SECTION II		TM9-1290-364-14&P				
(1) ITEM NO	(2) SMR CODE	(3) NSN	(4) CAGEC	(5) PART NUMBER	(6) DESCRIPTION AND USABLE ON CODES(UOC)	(7) QTY
					GROUP 00 FIGURE C-1	
					M94 MUZZLE VELOCITY SYSTEM (PN 12950994)	
1	PAODD	1220014170901	S7040	AY6706709-0	COMPUTER,BALLISTICS.....	1
2	PAODD	5895014166243	S7040	AY6706571-0	RECEIVER-TRANSMITTE.....	1
3	PCOZA	6135010363495	81349	BA-5590/U	BATTERY,NONRECHARGE.....	1
4	PAOZF	6625014171872	S7040	AY6706690-0	SIMULATOR,RADAR SIG.....	1
5	PAOOO	1290010982228	19200	12922098	BRACKET ASSEMBLY,AN.....	1
6	PAOOD	4933014167839	S7040	AM6707950-0	REEL,CABLE.....	1
7	PAOFF	6130014166247	S7040	WA6706718-0	ADAPTER,POWER SUPPL.....	1
8	PAOFF	8145014365664	S7040	AM6706714-0	SHIPPING AND STORAG.....	1
9	PAOFF	6150014175049	S7040	WA6706717-0	CABLE ASSEMBLY,POWE.....	1
10	PAFFF	6150014179709	S7040	WA6706719-0	CABLE ASSEMBLY,SPEC.....	1
11	PAOFF	6145014354411	S7040	WA6708023-0	CABLE.....	1
12	PAOZZ	5310009338121	96906	MS35338-139	WASHER,LOCK.....	4
13	PAOZZ	5305012401796	07690	438285-47	SCREW,CAP,SOCKET HE.....	4
					END OF FIGURE	

NOTE

Above SM&R codes are for the U.S. Army.

Table C-1. M94 Muzzle Velocity System, P/N 12950094 (Sheet 2 of 2)

(1) ITEM NO.	(2) SM&R CODE	(3) CAGEC	(4) PART NUMBER	(5) DESCRIPTION AND USABLE ON CODES (UOC)	(6) QTY
				M94 MUZZLE VELOCITY SYSTEM (P/N 12950094).....	
1	PAOHD	S7040	AY6706709-0	CONTROL PROCESSOR AND DISPLAY UNIT (SEE FIG. C-2 FOR BKDN)	1
2	PAOHD	S7040	AY6706571-0	TRANSCEIVER ASSY (SEE FIG. C-11 FOR BKDN).....	1
2a	PAOHD	S7040	AY6706571-2	TRANSCEIVER ASSY (SEE FIG. C-11A FOR BKDN)	ALT
3	PCOZZ	S7040	BA-5590/U	POWER SOURCE, SECONDARY.....	1
4	PAOFF	S7040	AY6706690-0	DOPPLER SIMULATOR (SEE FIG. C-23 FOR BKDN).....	1
5	PAOOO	19200	12922098	MOUNTING BRACKET ASSY (SEE FIG. C-15 FOR BKDN).....	1
6	PAOOO	S7040	AY6707950-0	CABLE DRUM (SEE FIG. C-21 FOR BKDN).....	1
7	PAOFF	S7040	WA6706718-0	POWER ADAPTER (SEE FIG. C-19 FOR BKDN).....	1
8	PAOFF	S7040	AM6706714-0	TRANSIT CASE (SEE FIG. C-20 FOR BKDN).....	2
9	PAOFF	S7040	WA6706717-0	POWER CABLE, 50-METER (SEE FIG. C-17 FOR BKDN).....	1
10	PAOFF	S7040	WA6706719-0	INTERCONNECTION CABLE, 30-METER (SEE FIG. C-16 FOR BKDN).....	1
11	PAOFF	S7040	WA6708023-0	POWER SOURCE CABLE, SECONDARY (SEE FIG. C-18 FOR BKDN).....	1
12	PAOZZ	96906	MS35338-139	WASHER.....	4
13	PAOZZ	15526	DIN912A2	SCREW, M6-40.....	4
				END OF FIGURE	

NOTE

Above SM&R codes are for the U.S. Marine Corps.

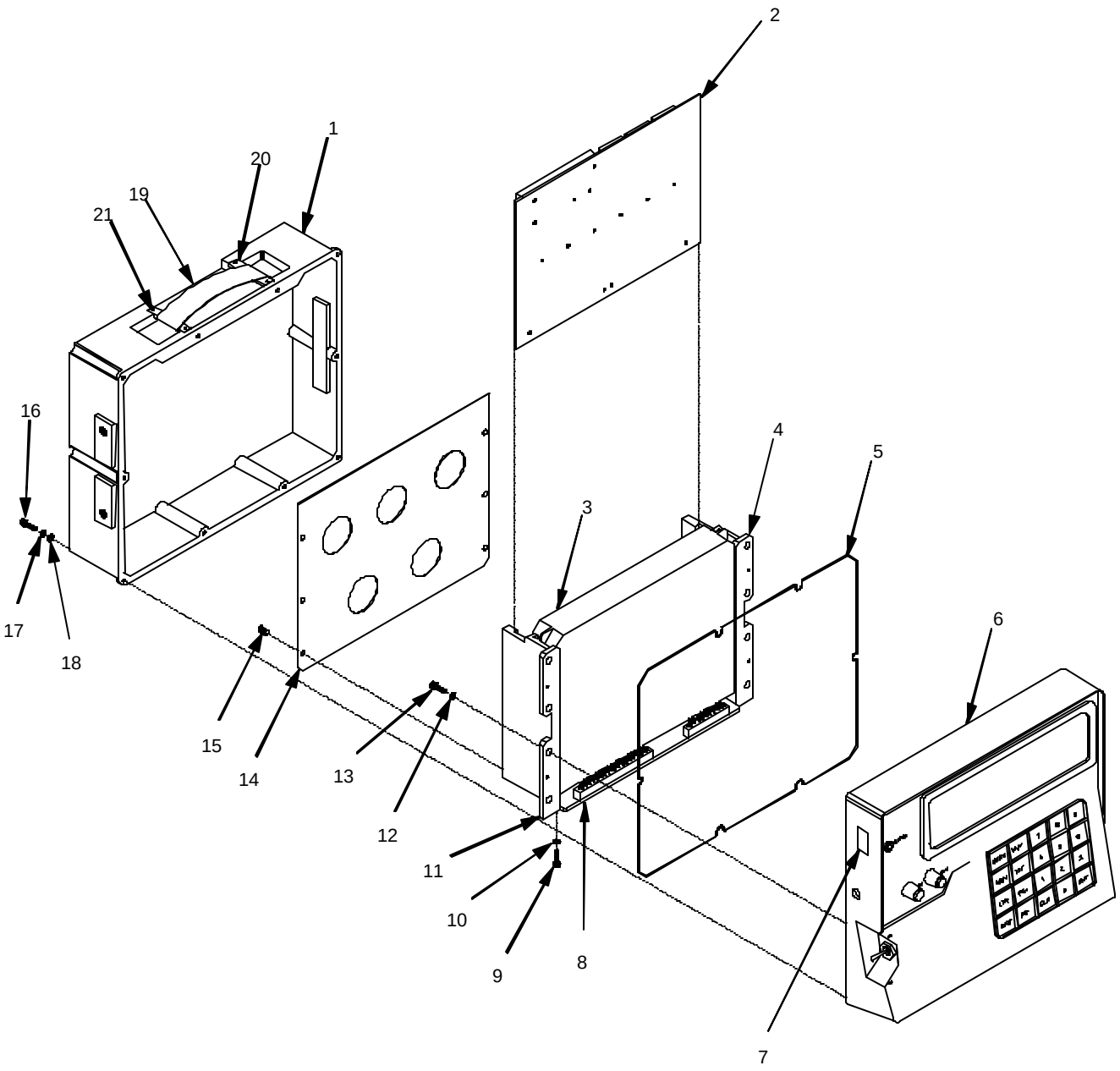

Figure C-2. Control Processor Display Unit (CPDU), P/N AY6706709-0

Table C-2. Control Processor Display Unit (CPDU), P/N AY6706709-0 (Sheet 1 of 2)

SECTION II TM9-1290-364-14&P

(1) ITEM NO	(2) SMR CODE	(3) NSN	(4) CAGEC	(5) PART NUMBER	(6) DESCRIPTION AND USABLE ON CODES(UOC)	(7) QTY
					GROUP 01 FIGURE C-2	
					CONTROL PROCESSOR DISPLAY UNIT (CPDU) (P/N AY6706709-0)	
1	PBFFF	5340014365679	S7040	AM6706693-0	COVER,PROTECTIVE,DU.....	1
2	PAFDD	5998014171871	S7040	AY6706703-0	CIRCUIT CARD ASSEMB.....	1
3	PAFDD	6130014166246	S7040	AY6706704-0	POWER SUPPLY.....	1
4	XAFZZ		S7040	AM6706555-0	WALL,RIGHT.....	1
5	PAFZZ	5331014451449	S7040	MP6704984-0	O-RING.....	1
6	PAFDD	6110014365678	S7040	AY6706708-0	PANEL,POWER DISTRUB.....	1
7	XDFZZ		S7040	NP6706711-0	NAMEPLATE.....	1
8	PADDD	5998014353133	S7040	AY6706706-0	CIRCUIT CARD ASSEMB.....	1
9	PADZZ	5305000546651	96906	MS51957-27	SCREW,MACHINE.....	4
10	PADZZ	5310007737624	80205	NAS620C6	WASHER,FLAT.....	14
11	XAFZZ		S7040	AM6706554-0	WALL,LEFT.....	1
12	PADZZ	5305000546652	96906	MS51957-28	SCREW,MACHINE.....	8
13	PAFZZ	5340014434100	S7040	MP6706561-0	COVER,PROTECTIVE,DU.....	1
14	PADZZ	5305000667326	96906	MS24693-C24	SCREW,MACHINE.....	6
15	PAFZZ	5305014468109	S7040	MP6704982-0	SCREW.EXTERNALLY RE.....	10
16	PAFZZ	5310009338119	96906	MS35338-137	WASHER,LOCK.....	10
17	PAFZZ	5310000695291	80205	NAS620C8	WASHER,FLAT.....	10
18	PAFZZ	5340014421979	S7040	MP6704976-0	STRAP,WEBBING.....	1
19	PAFZZ	5340014434101	S7040	MP6704975-0	HOLDER,RECESS.....	2
20	PAFZZ	5305000667325	96906	MS24693-C5	SCREW,MACHINE.....	4

END OF FIGURE

NOTE

Above SM&R codes are for the U.S. Army.

Table C-2. Control Processor Display Unit (CPDU), P/N AY6706709-0 (Sheet 2 of 2)

(1) ITEM NO.	(2) SM&R CODE	(3) CAGEC	(4) PART NUMBER	(5) DESCRIPTION AND USABLE ON CODES (UOC)	(6) QTY
				CONTROL PROCESSOR DISPLAY UNIT (CPDU) (P/N AY6706709-0)	
1	PAFFF	S7040	AM6706693-0	COVER ASSY	1
2	PAFHD	S7040	AY6706703-0	CCA, MVP (SEE FIG. C-6 FOR BKDN)	1
3	PAFDD	S7040	AY6706704-0	POWER SUPPLY MODULE (SEE FIG. C-4 FOR BKDN)	1
4	XBFFF	S7040	AM6706555-0	ELECTRICAL STIFFENER	1
5	MFFZZ	S7040	MP6704984-0	O-RING	1
6	PAFHH	S7040	AY6706708-0	FRONT PANEL ASSY (SEE FIG. C-3 FOR BKDN)	1
7	PAOZZ	S7040	NP6706711-0	NAME PLATE	1
8	PAFFF	S7040	AY67067O6-0	CCA, MOTHER BOARD (SEE FIG. C-5 FOR BKDN)	1
9	PAFZZ	96906	MS51957-27	SCREW	6
10	PAFZZ	80205	NAS620C6	WASHER	14
11	XBFFF	S7040	AM6706554-0	ELECTRICAL STIFFENER	1
12	PAFZZ	80205	NAS620C6	WASHER	8
13	PAFZZ	96906	MS51957-28	SCREW	8
14	XBFZZ	S7040	MP6706561-0	CAGE COVER	1
15	PAFZZ	96906	MS24693C-24	SCREW	6
16	PAFZZ	S7040	MP6704982-0	SCREW	10
17	PAFZZ	96906	MS35338-137	WASHER	10
18	PAFZZ	80205	NAS620C8	WASHER	10
19	MFOZZ	S7040	MP6704976-0	HANDLE	1
20	PAOZZ	S7040	MP6704975-0	HANDLE HOLDER	2
21	PAFZZ	96906	MS24693-C5	SCREW	4
				END OF FIGURE	

NOTE

Above SM&R codes are for the U.S. Marine Corps.

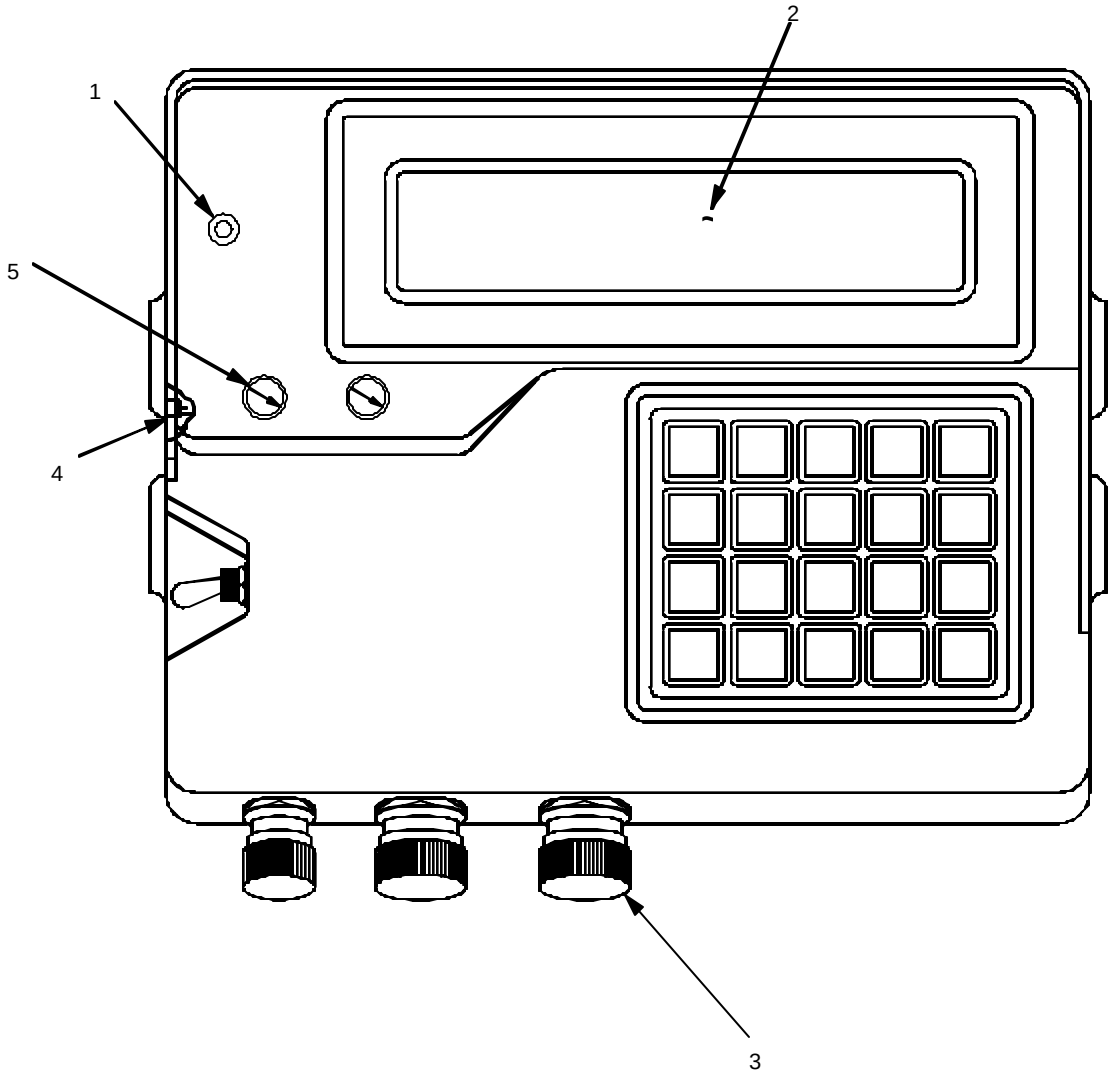

Figure C-3. CPDU Front Panel Assembly, P/N AY6706708-0 (Sheet 1 of 2)

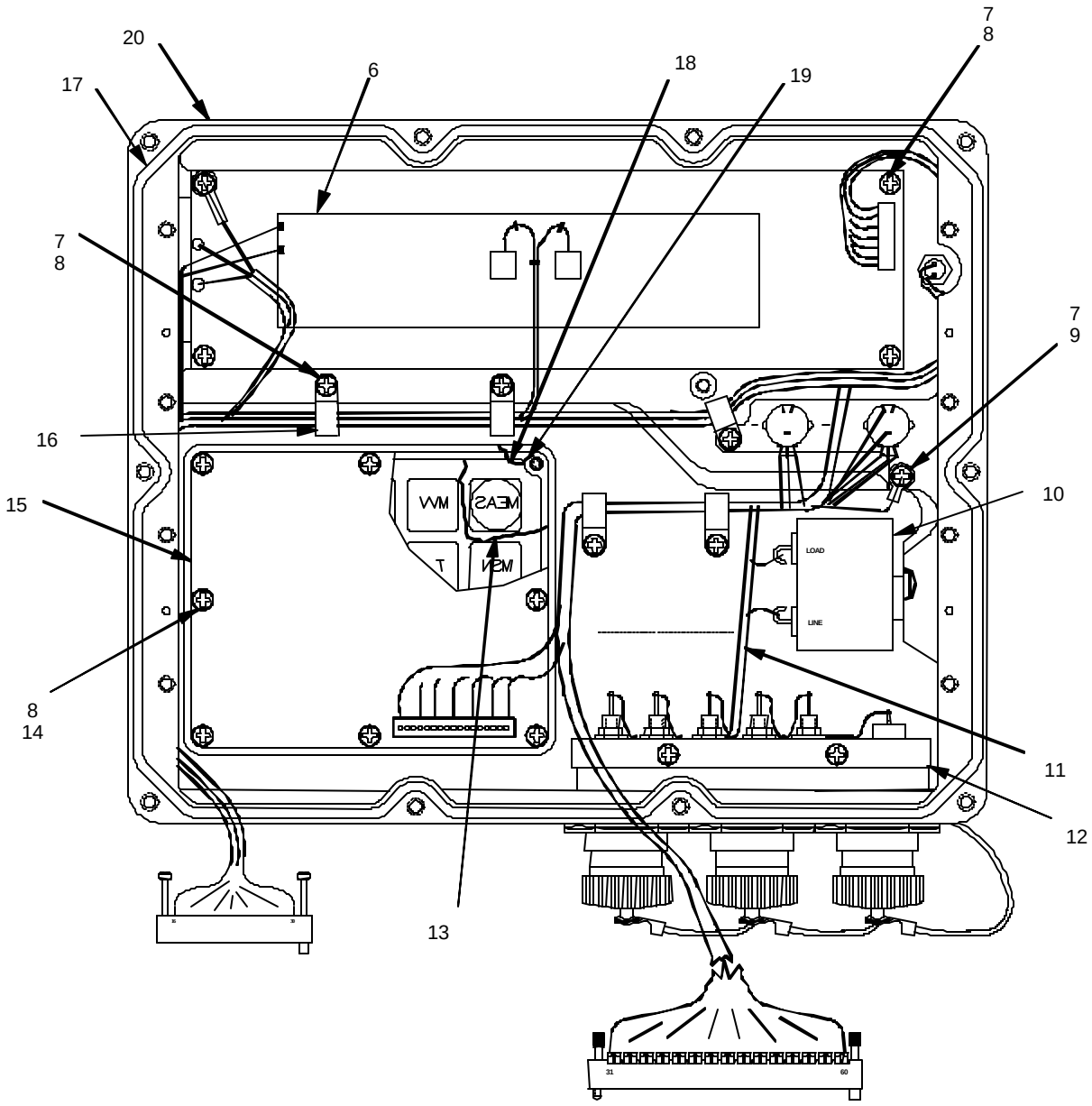

Figure C-3. CPDU Front Panel Assembly, P/N AY6706708-0 (Sheet 2 of 2)

Table C-3. CPDU Front Panel Assembly, P/N AY6706708-0 (Sheet 1 of 2)

SECTION II		TM9-1290-364-14&P				
(1)	(2)	(3)	(4)	(5)	(6)	(7)
ITEM NO	SMR CODE	NSN	CAGEC	PART NUMBER	DESCRIPTION AND USABLE ON CODES(UOC)	QTY
					GROUP 0101 FIGURE C-3	
					CPDU FRONT PANEL ASSEMBLY (P/N AY6706708-0)	
1	PAFZA	5980010962084	81349	JTXM19500/51902	LIGHT EMITTING DIOD.....	1
2	PAFZZ	9340014440736	S7040	MP6706701-0	WINDOW,OBSERVATION.....	1
3	PAFZZ	5935012798630	81349	D38999/33W13N	COVER,ELECTRICAL CO.....	3
4	PAFZZ	5305008552989	97539	SEELSKREWR10-32X	SCREW,MACHINE.....	1
5	PAFZZ	5355007621489	96906	MS91528-0E1B	KNOB.....	2
6	PAFZZ	5980014438214	S7040	AY6706702-0	COUPLER,OPTOELECTRO.....	1
6A	PAFZZ	5980014706822	S7040	AY6706702-1	DISPLAY,OPTOELECTRO.....	1
7	PAFZZ	5305000545647	96906	MS51957-13	SCREW,MACHINE.....	10
8	PAFZZ	5310000570573	80205	NAS620C4	WASHER,FLAT.....	17
9	PAFZZ	5310009338118	96906	MS35338-135	WASHER,LOCK.....	1
10	PAFZZ	5925014596071	81541	AP1-1-72-502	CIRCUIT BREAKER.....	1
11	PAFFF	6150014354412	S7040	WA6706707-0	WIRING HARNESS,BRAN.....	1
12	PAFFF	5915014504240	S7040	AY6706705-1	FILTER,RADIO FREQUE.....	1
13	PAFZZ	5365014455840	S7040	MP6704944-0	BUSHING.....	20
14	PAFZZ	5305000545652	96906	MS51957-18	SCREW,MACHINE.....	8
15	PAFFF	5998014171869	S7040	AY6704586-0	CIRCUIT CARD ASSEMB.....	1
16	PAFZZ	5340007828737	80205	NAS1397P4N	CLAMP,LOOP.....	5
17	PAFZZ	5331014451449	S7040	MP6704984-0	O-RING.....	1
18	PAFZZ	5330014451450	S7040	MP6705069-0	GASKET.....	1
19	XAFZZ		S7040	MP6704824-0	KEYBOARD BEZEL.....	1
20	XAFFF		S7040	AM6707327-0	PANEL, FRONT.....	1

END OF FIGURE

NOTE

Above SM&R codes are for the U.S. Army.

Table C-3. CPDU Front Panel Assembly, P/N AY6706708-0 (Sheet 2 of 2)

(1) ITEM NO.	(2) SM&R CODE	(3) CAGEC	(4) PART NUMBER	(5) DESCRIPTION AND USABLE ON CODES (UOC)	(6) QTY
				FRONT PANEL ASSY (P/N AY6706708-0)	
1	PAFZZ	81349	JTXM19500/51902	LED	1
2	PAFZZ	S7040	MP6706701-0	WINDOW	1
3	PAFZZ	81349	D38999/33W13N	CAP, DUST	3
4	PAFZZ	96906	MS3212-31	SCREW	1
5	PAFZZ	96906	MS91528-OE1B	KNOB	2
6	PAFHH	S7040	AY6706702-0	MODULE, DISPLAY (SEE FIG. C-9 FOR BKDN)	1
6a	PAFHH	S7040	AY6706702-1	MODULE, DISPLAY (SEE FIG. C-9 FOR BKDN)	ALT
7	PAFZZ	96906	MS51957-13	SCREW	4
8	PAFZZ	80205	NAS620C4	WASHER	12
9	PAFZZ	96906	MS35338-135	WASHER	1
10	PAFZZ	6Y107	AP-1-1-72-502	CIRCUIT BREAKER	1
11	PAFFF	S7040	WA6706707-0	HARNESS ASSY (SEE FIG. C-22 FOR BKDN)	1
12	PAFFH	S7040	AY6706705-1	EMI MODULE (SEE FIG. C-7 FOR BKDN)	1
13	PAFZZ	S7040	MP6704944-0	CAP, KEY	20
14	PAFZZ	96906	MS51957-18	SCREW	8
15	PAFHH	S7040	AY6704586-0	CCA, KEYBOARD	1
16	PAFZZ	80205	NAS1397R4B	CLAMP	5
17	MFFZZ	S7040	MP6704984-0	O-RING	1
18	PAFZZ	S7040	MP6705069-0	GASKET, KEYBOARD	1
19	XAFZZ	S7040	MP6704824-0	BEZEL, KEYBOARD	1
20	XAFFF	S7040	AM6707327-0	FRONT PANEL	1
				END OF FIGURE	

NOTE

Above SM&R codes are for the U.S. Marine Corps.

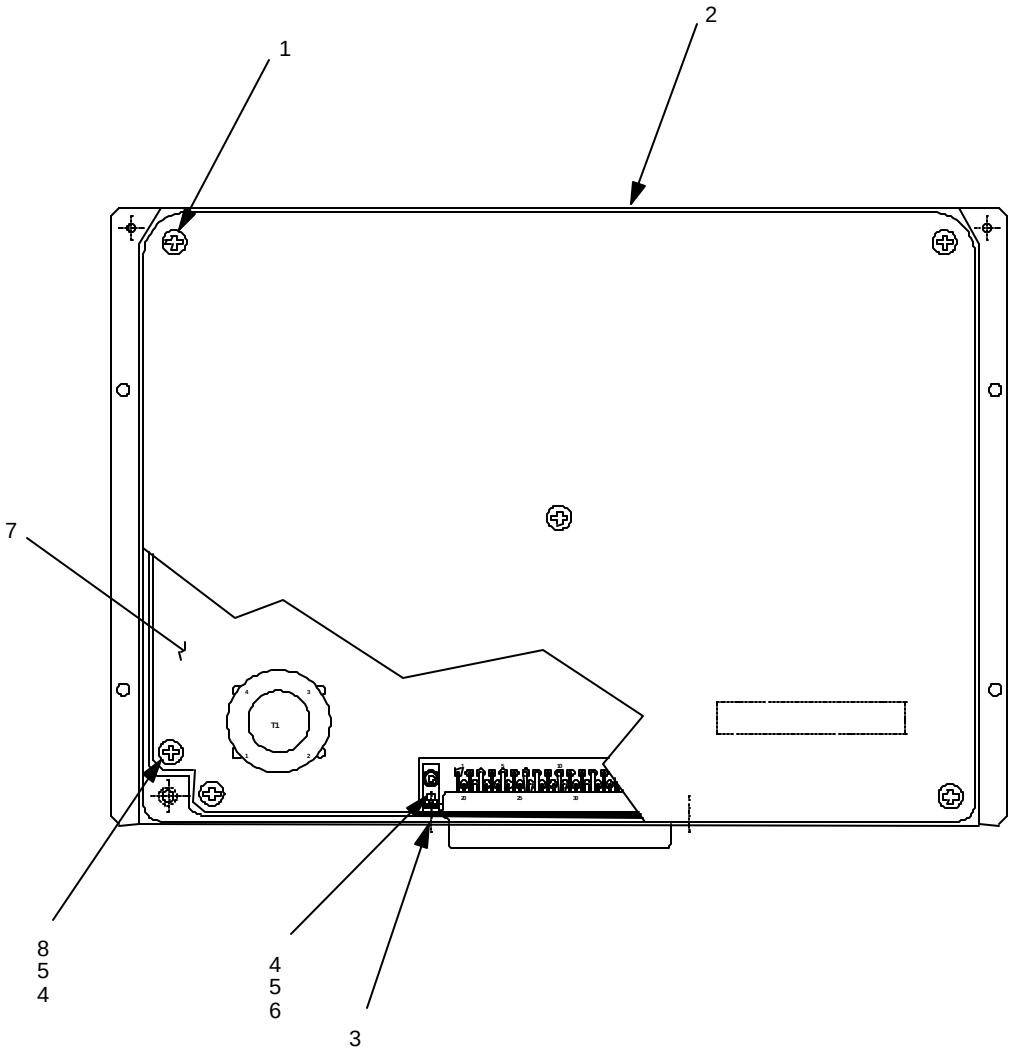

Figure C-4. Power Supply Module, P/N AY6706704-0 (Sheet 1 of 2)

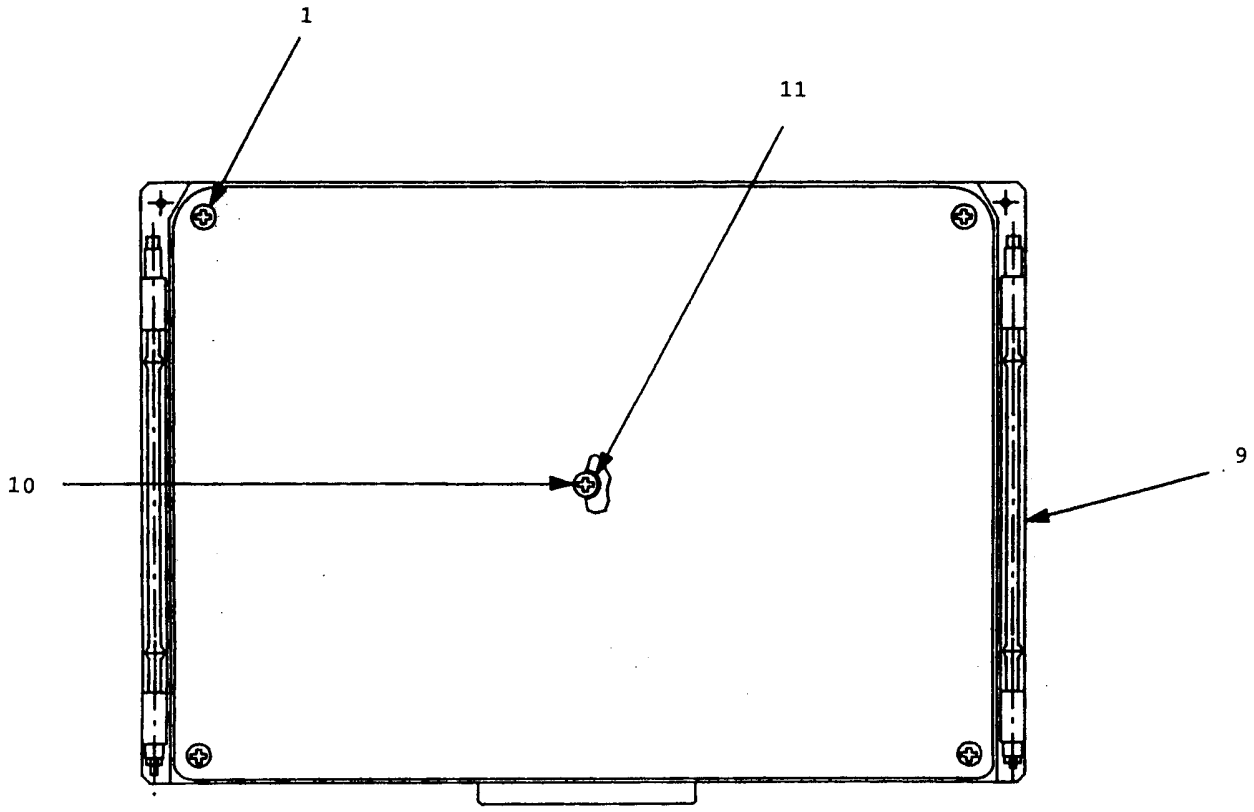

Figure C-4. Power Supply Module, P/N AY6706704-0 (Sheet 2 of 2)

Table C-4. Power Supply Module, P/N AY6706704-0 (Sheet 1 of 2)

SECTION II		TM9-1290-364-14&P				
(1)	(2)	(3)	(4)	(5)	(6)	(7)
ITEM NO	SMR CODE	NSN	CAGEC	PART NUMBER	DESCRIPTION AND USABLE ON CODES(UOC)	QTY
					GROUP 0102 FIGURE C-4	
					POWER SUPPLY MODULE (P/N AY6706704-0)	
1	PADZZ	5305009939189	96906	MS24693-C2	SCREW,MACHINE.....	9
2	XADZZ		S7040	MP6706697-0	COVER, MECHANISM.....	2
3	PADZZ	5305002256400	96906	MS24693-C3	SCREW,MACHINE.....	2
4	PADZZ	5310007239676	80205	NAS620C4L	WASHER,FLAT.....	13
5	PADZZ	5310009338118	96906	MS35338-135	WASHER,LOCK.....	13
6	PADZZ	5310002083786	80205	NAS671C4	NUT,PLAIN,HEXAGON.....	2
7	PADDD	5998014353130	S7040	AY6706612-0	CIRCUIT CARD ASSEMB.....	1
8	PADZZ	5305000545649	96906	MS51957-15	SCREW,MACHINE.....	11
9	XADDD		S7040	AM6706696-0	MECHANICAL ASSEMBLY.....	1
10	PADZZ	5305007636009	96906	MS24693-C1	SCREW,MACHINE.....	1
11	PADZZ	5340012298412	80205	NAS1829-3C03	POST,ELECTRICAL-MEC.....	1

END OF FIGURE

NOTE

Above SM&R codes are for the U.S. Army.

Table C-4. Power Supply Module, P/N AY6706704-0 (Sheet 2 of 2)

(1) ITEM NO.	(2) SM&R CODE	(3) CAGEC	(4) PART NUMBER	(5) DESCRIPTION AND USABLE ON CODES (UOC)	(6) QTY
				POWER SUPPLY MODULE (P/N AY6706704-0)	
1	PADZZ	96906	MS24693-C2	SCREW	5
2	XADZZ	S7040	MP6706697-0	COVER	2
3	PADZZ	96906	MS24693-C3	SCREW	2
4	PADZZ	80205	NAS620C4L	WASHER	2
5	PADZZ	96906	MS35338-135	WASHER	2
6	PADZZ	80205	NAS671C4	NUT	2
7	PADDD	S7040	AY6706612-0	CCA, POWER SUPPLY (SEE FIG. C-10 FOR BKDN)	1
8	PADZZ	96906	MS51957-15	SCREW	11
9	PADZZ	96906	MS35338-135	WASHER	11
10	PADZZ	80205	NAS620C4L	WASHER	11
11	PADDD	S7040	AM6706696-0	MECHANICAL ASSY, POWER SUPPLY	1
12	PADZZ	96906	MS24693-C2	SCREW	4
13	PADZZ	96906	MS24693-C1	SCREW	1
14	PADZZ	80205	NAS1829-3C03	SPACER	1
				END OF FIGURE	

NOTE

Above SM&R codes are for the U.S. Marine Corps.

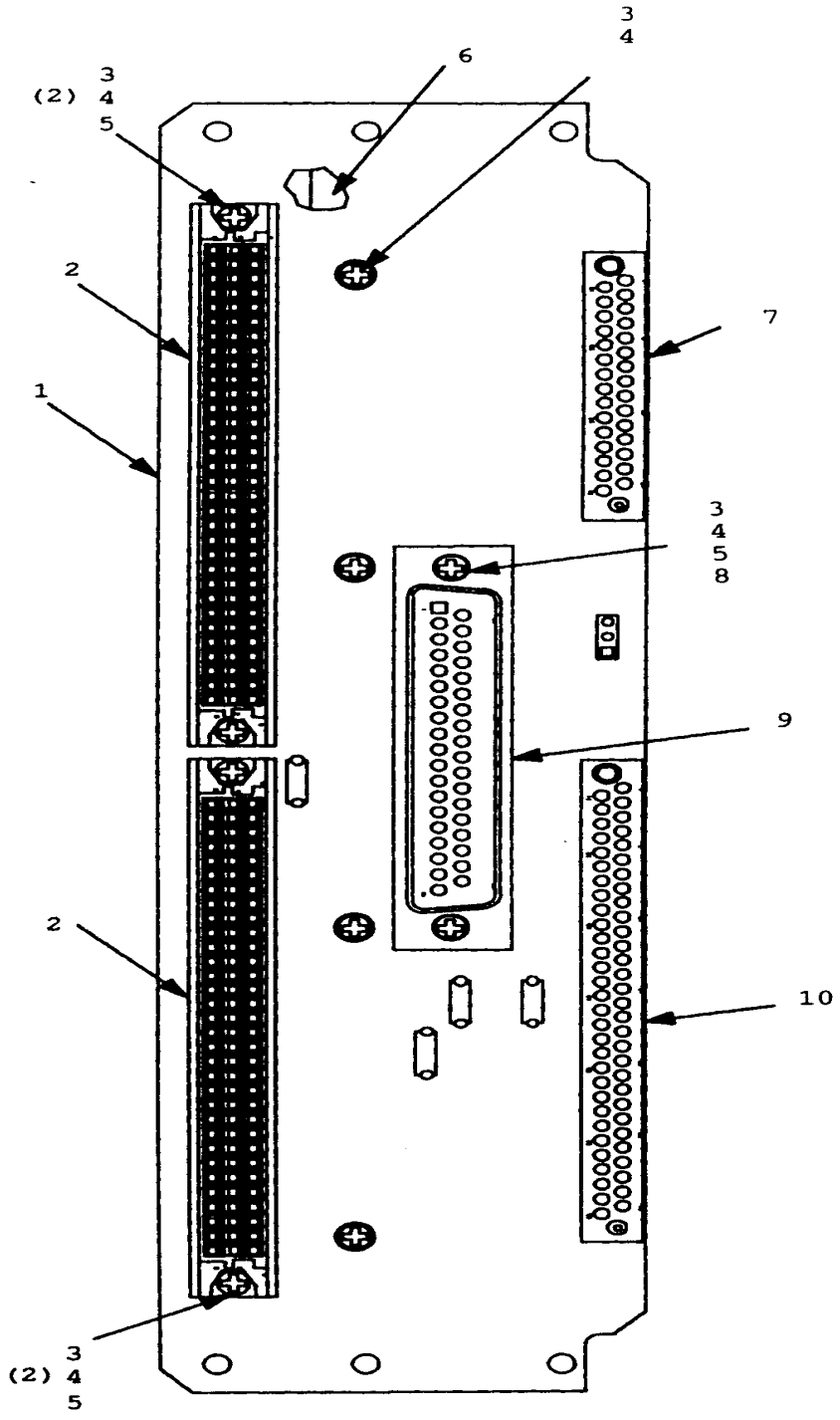

Figure C-5. Motherboard CCA, P/N AY6706706-0

Table C-5. Motherboard CCA, P/N AY6706706-0 (Sheet 1 of 2)

SECTION II		TM9-1290-364-14&P				
(1) ITEM NO	(2) SMR CODE	(3) NSN	(4) CAGEC	(5) PART NUMBER	(6) DESCRIPTION AND USABLE ON CODES(UOC)	(7) QTY
					GROUP 0103 FIGURE C-5	
					MOTHERBOARD CCA (P/N AY6706706-0)	
1	XADZZ		S7040	PC6706579-0	PRINTED WIRE BOARD.....	1
2	PADZA	5935012124692	81349	M55302/132-01	CONNECTOR,RECEPTACL.....	2
3	PADZZ	5305000545649	96906	MS51957-15	SCREW,MACHINE.....	10
4	PADZZ	5310000570573	80205	NAS620C4	WASHER,FLAT.....	16
5	PADZZ	5310002083786	80205	NAS671C4	NUT,PLAIN,HEXAGON.....	6
6	XADZZ		S7040	MP6706575-0	STIFFNER,MECHANICAL.....	1
7	PADZZ	5935010454795	81349	M55302/56B30	CONNECTOR,RECEPTACL.....	1
8	XADZZ		S7040	MP6706606-0	SPACER.....	2
9	PADZZ	5935010365960	81349	M24308/23-10	CONNECTOR,RECEPTACL.....	1
10	PADZZ	5935010437778	81349	M55302/56B60	CONNECTOR,RECEPTACL.....	1
					END OF FIGURE	

NOTE

Above SM&R codes are for the U.S. Army.

Table C-5. Motherboard CCA, P/N AY6706706-0 (Sheet 2 of 2)

(1) ITEM NO.	(2) SM&R CODE	(3) CAGEC	(4) PART NUMBER	(5) DESCRIPTION AND USABLE ON CODES (UOC)	(6) QTY
				MOTHERBOARD CCA (P/N AY6706706-0)	
1	XAFZZ	S7040	PC6706579-0	PWB	1
2	PAFZZ	80205	M55302/132-01	CONNECTOR, J1, J3	2
3	PAFZZ	96906	MS51957-15	SCREW	4
4	PAFZZ	80205	NAS620C4	WASHER	8
5	PAFZZ	80205	NAS671-C4	NUT	4
6	XBFZZ	S7040	MP6706575-0	STIFFENER	1
7	PAFZZ	96906	MS51957-15	SCREW	4
8	PAFZZ	80205	NAS620C4	WASHER	4
9	PAFZZ	81349	M55302/56-B30	CONNECTOR, J5	1
10	PAFZZ	96906	MS51957-15	SCREW	2
11	PAFZZ	80205	NAS620C4	WASHER	4
12	PAFZZ	80205	NAS671-C4	NUT	2
13	XBFZZ	S7040	MP6706606-0	SPACER	2
14	PAFZZ	81349	M24308/23-10	CONNECTOR, J2	1
15	PAFZZ	81349	M55302/56-B60	CONNECTOR, J4	1
				END OF FIGURE	

NOTE

Above SM&R codes are for the U.S. Marine Corps.

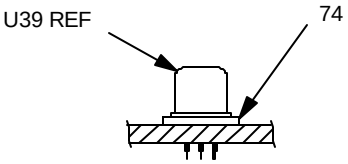

DETAIL VIEW A

3 PL (Q2, Q3, U39)

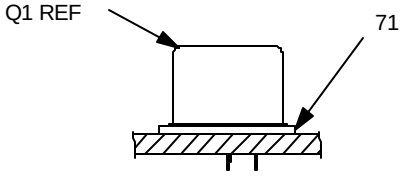

DETAIL VIEW B

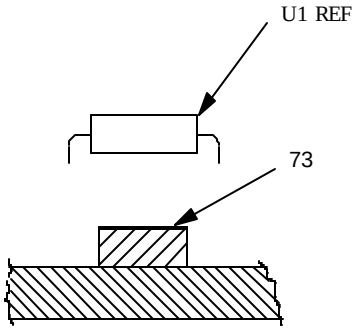

DETAIL VIEW C

29 PL (U1-U5, U11-U15, U17-U19, U21, U23-U31, U33, U36-38,U41))

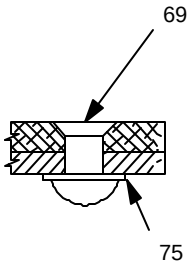

DETAIL VIEW D

9 PL

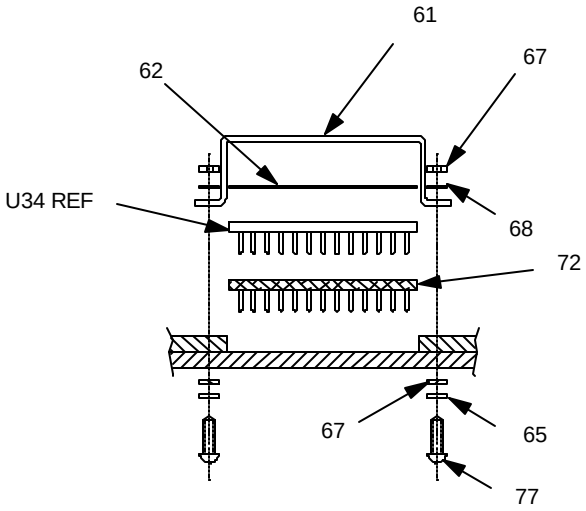

DETAIL VIEW E

Figure C-6. CPDU Muzzle Velocity Processor CCA, P/N AY6706703-0 (Sheet 1 of 4)

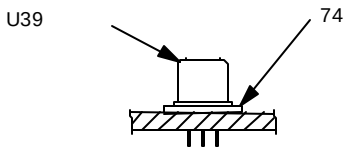

DETAIL VIEW A

3 PL (Q2, Q3, U39)

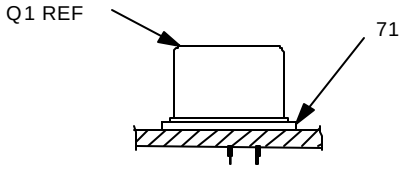

DETAIL VIEW B

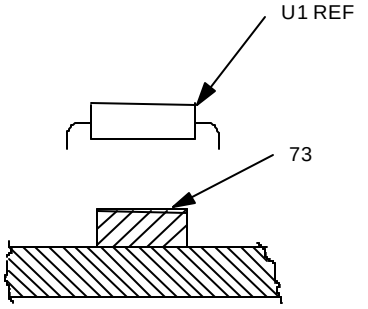

DETAIL VIEW C

29 PL (U1-U5, U11-U15, U17-U19, U21, U23-U31, U33, U36-38,U41))

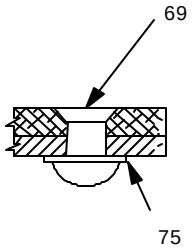

DETAIL VIEW D

9 PL

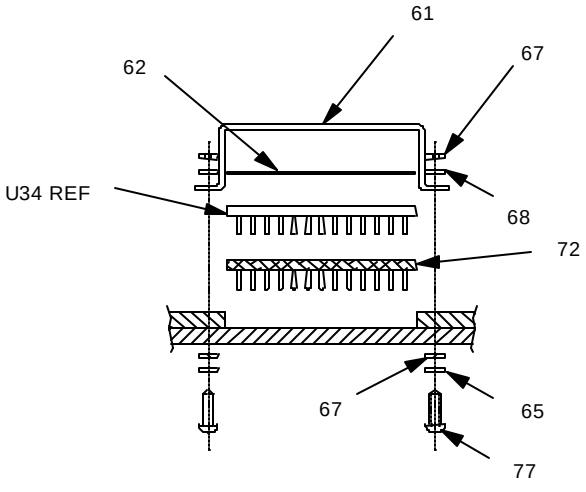

DETAIL VIEW E

Figure C-6. CPDU Muzzle Velocity Processor CCA, P/N AY6706703-0 (Sheet 2 of 4)

LEGEND

REF DES	ITEM NO.	REF DES	ITEM NO.	REF DES	ITEM NO.
C1	1	C46	1	CR32	10
C2	1	C47	1	CR33	10
C3	1	C48	1	CR34	10
C4	1	C49	1	P1	14
C5	1	C50	5	P2	15
C6	1	C51	5	P3	14
C7	1	C52	6	Q1	16
C9	1	C53	1	Q2	17
C10	1	C54	1	Q3	17
C11	1	C55	7	R4	27
C13	1	C56	8	R5	35
C14	1	C57	8	R6	33
C15	1	C58	9	R8	34
C16	1	C59	1	R11	21
C17	1	C60	1	R12	34
C18	1	C61	1	R14	22
C19	1	C63	1	R15	22
C20	1	C64	1	R31	23
C22	1	C65	1	R34	24
C23	1	C66	1	R35	25
C24	1	C68	1	R36	25
C27	1	C69	1	R37	26
C28	1	CR1	10	R38	26
C29	1	CR2	10	R39	26
C31	1	CR4	10	R40	28
C32	1	CR5	12	R41	28
C33	1	CR6	12	R42	29
C34	1	CR7	10	R43	26
C35	1	CR8	10	R44	29
C36	1	CR9	13	R45	26
C37	1	CR10	13	R46	26
C38	2	CR11	13	R47	26
C39	2	CR12	11	R48	26
C41	1	CR13	11	R49	27
C42	3	CR29	10	R50	30
C43	1	CR30	10	R51	26
C44	4	CR31	10	R52	26

Figure C-6. CPDU Muzzle Velocity Processor CCA, P/N AY6706703-0 (Sheet 3 of 4)

LEGEND

REF DES	ITEM NO.	REF DES	ITEM NO.	REF DES	ITEM NO.
R53	31	R105	18	U24	44
R54	31	R106	18	U25	45
R55	26	R107	18	U26	46
R56	27	R108	19	U27	47
R57	32	R109	20	U28	48
R58	26	R110	18	U29	49
R59	26	R111	27	U30	50
R60	25	R113	18	U31	43
R61	25	R114	18	U33	57
R64	24	U2	41	U34	58
R65	24	U4	54	U36	51
R90	27	U5	55	U37	52
R94	27	U7	56	U38	53
R95	25	U11	36	U41	49
R96	27	U14	37	Z11	59
R97	27	U17	38	Z12	59
R98	27	U18	40	Z13	59
R101	27	U19	40	Z14	59
R102	25	U21	42	Z17	59
R104	18	U23	43		

Figure C-6. CPDU Muzzle Velocity Processor CCA, P/N AY6706703-0 (Sheet 4 of 4)

Table C-6. CPDU Muzzle Velocity Processor CCA, P/N AY6706703-0 (Sheet 1of 6)

SECTION II TM9-1290-364-14&P

(1) ITEM NO	(2) SMR CODE	(3) NSN	(4) CAGEC	(5) PART NUMBER	(6) DESCRIPTION AND USABLE ON CODES(UOC)	(7) QTY
					GROUP 0104 FIGURE C-6	
					CPDU MUZZLE VELOCITY PROCESSOR CCA, (P/N AY6706703-0)	
1	XADZZ		81349	M39014/22-1094	CAPACITOR,FIXED,CER.....	48
2	PADZZ		81349	M39003/01-8214	CAPACITOR,FIXED.....	2
3	XADZZ		81349	M39003/01-8032	CAPACITOR,FIXED,ELE.....	1
4	XADZZ		81349	M39003/03-3025	CAPACITOR,FIXED.....	1
5	XADZZ		81349	M39014/22-1079	CAPACITOR,FIXED,CER.....	2
6	XADZZ		81349	M39003/01-8048	CAPACITOR,FIXED,ELE.....	1
7	XADZZ		81349	M39014/22-0975	CAPACITOR,FIXED,CER.....	1
8	XADZZ		81349	M39014/22-1011	CAPACITOR,FIXED,CER.....	2
9	XADZZ		81349	CCR05CJ6R8BS	CAPACITOR,FIXED.....	1
10	PADZZ	5961005844527	81349	JANTX1N4148-1	SEMICONDUCTOR DEVIC.....	10
11	PADZZ	5961010128198	81349	JANTX1N4626	SEMICONDUCTOR DEVIC.....	2
12	XDDZZ		81349	JANTX1N756A	SEMICONDUCTOR DEVIC.....	2
13	PADZZ	5961010708942	81349	JANTX1N758A-1	SEMICONDUCTOR DEVIC.....	3
14	PADZA	5935012387768	81349	M55302/131-01	CONNECTOR,RECEPTACL.....	2
15	PADZA	5935010743386	81349	M55302/64-B60F	CONNECTOR,RECEPTACL.....	1
16	PADZZ	5961011878836	81349	JANTX2N2905AL	TRANSISTOR.....	1
17	PADZA	5961008583826	81349	JANTX2N2222A	TRANSISTOR.....	2
18	PADZZ	5905010439236	81349	RLR07C1003FS	RESISTOR,FIXED,FILM.....	7
19	PADZZ	5905010535789	81349	RLR07C1201GS	RESISTOR,FIXED,FILM.....	1
20	PADZZ	5905011633117	81349	RLR07C3321FS	RESISTOR,FIXED,FILM.....	1
21	PADZZ	5905011812347	81349	RLR07C1742FS	RESISTOR,FIXED,FILM.....	1
22	PADZZ	5905011466672	81349	RLR07C1202GS	RESISTOR,FIXED,FILM.....	2
23	PADZZ	5905011600932	81349	RLR07C3900GS	RESISTOR,FIXED,FILM.....	1
24	PADZZ	5905010851164	81349	RLR07C1001GS	RESISTOR,FIXED,FILM.....	3
25	PADZZ	5905011836168	81349	RLR07C20R0GS	RESISTOR,FIXED,FILM.....	6
26	PADZZ	5905011395314	81349	RLR07C1002GS	RESISTOR,FIXED,FILM.....	17
27	PADZZ	5905011491143	81349	RLR07C5601GS	RESISTOR,FIXED,FILM.....	10
28	PADZZ	5905011395316	81349	RLR07C2203GS	RESISTOR,FIXED,FILM.....	2
29	PADZZ	5905011370094	81349	RLR07C6800GS	RESISTOR,FIXED,FILM.....	2
30	PADZZ	5905011505515	81349	RLR07C2003GS	RESISTOR,FIXED,FILM.....	1
31	PADZZ	5905011676969	81349	RLR07C1601GS	RESISTOR,FIXED,FILM.....	2
32	PADZZ	5905001219919	81349	RCR07G106JS	RESISTOR,FIXED,COMP.....	1
33	PADZZ	5905010493123	81349	RLR07C2200GS	RESISTOR,FIXED,FILM.....	1
34	PADZZ	5905011505459	81349	RLR07C2001GS	RESISTOR,FIXED,FILM.....	2
35	PADZZ	5905011395315	81349	RLR07C1503GS	RESISTOR,FIXED,FILM.....	1
36	PADZZ	5962012541149	81349	M38510/65701BCA	MICROCIRCUIT,DIGITA.....	1
37	PADZZ	5962012724446	81349	M38510/65802BEA	MICROCIRCUIT,DIGITA.....	1
38	PADZZ	5962012821049	27014	MM54HC273J/883B	MICROCIRCUIT,DIGITA.....	1
39	PADZZ	5962012008321	27014	MM54HC08J/883B	MICROCIRCUIT,DIGITA.....	1
40	PADZZ	5962011713774	27014	MM54HC32J/883B	MICROCIRCUIT,DIGITA.....	1
41	PADZZ	5962011233186	27014	MM54C244J-MIL	MICROCIRCUIT,DIGITA.....	1
42	PADZZ	5962011233186	27014	MM54C244J-MIL	MICROCIRCUIT,DIGITA.....	1
43	PADZZ	5962014062375	67268	5962-8866203NA	MICROCIRCUIT,MEMORY.....	2
44	MDDZZ		S7040	MC6706585-0	EPROM L (U24).....	1
45	MDDZZ		34335	MC6706586-0	EPROM MID.....	1
46	MDDZZ		S7040	MC6706587-0	EPROM HIGH.....	1
47	PADZZ	5955011891019	81349	M55310/16-B41A32	OSCILLATOR.....	1

Table C-6. CPDU Muzzle Velocity Processor CCA, P/N AY6706703-0 (Sheet 2 of 6)

SECTION II			TM9-1290-364-14&P			
(1) ITEM NO	(2) SMR CODE	(3) NSN	(4) CAGEC	(5) PART NUMBER	(6) DESCRIPTION AND USABLE ON CODES(UOC)	(7) QTY
			M000			
48	PADZZ	5962012773331	81349	M38510/65702BCA	MICROCIRCUIT,DIGITA.....	1
49	PADZZ	5962012862238	81349	M38510/11201BCA	MICROCIRCUIT,LINEAR.....	2
50	PADZZ	5962013461240	64155	LT1080MJ/883B	MICROCIRCUIT,LINEAR.....	1
51	PADZZ	5962011820577	22915	340475	MICROCIRCUIT,LINEAR.....	1
52	XDDZZ		89305	033759-2	MICROCIRCUIT.....	1
53	PADZZ	5962012008147	27014	MM54HC245J/883B	MICROCIRCUIT,DIGITA.....	1
54	PADZA	5962012639407	67268	8406501JA	MICROCIRCUIT,DIGITA.....	1
55	PADZZ	5962011027610	34649	MD8251A/B	MICROCIRCUIT,DIGITA.....	1
55A	XDDZZ		16236	MSM8251ARS	MICROCIRCUIT,DIGITA.....	1
56	PADZZ	5962013723606	67268	5962-8956101EA	MICROCIRCUIT,DIGITA.....	1
57	PADZZ	5962014208941	67268	5962-9071103MEA	MICROCIRCUIT,LINEAR.....	1
58	PADZZ	5962013943454	51640	ADSP-2100ASG/883	MICROCIRCUIT,DIGITA.....	1
59	PADZZ	5905012794826	81349	M8340109K5601GC	RESISTOR NETWORK,FI.....	5
60	XADZZ		S7040	PC6706556-0	PRINTED WIRE BOARD.....	1
61	XADZZ		S7040	MP6706582-0	HOUSING DISPLAY.....	1
63	PADZZ	5310000570573	80205	NAS620C4	WASHER,FLAT.....	6
64	PADZZ	5305000545649	96906	MS51957-15	SCREW,MACHINE.....	6
65	PADZZ	5310009282690	96906	MS35338-134	WASHER,LOCK.....	4
66	PADZZ	5305000545641	96906	MS51957-7	SCREW,MACHINE.....	4
67	PADZZ	5310000434708	80205	NAS620C2	WASHER,FLAT.....	16
68	PADZZ	5310008124294	80205	NAS671C2	NUT,PLAIN,HEXAGON.....	8
69	XADZZ		96906	MS20426AD2-4	RIVET,SOLID.....	13
70	XADZZ		52094	V225-4.80HR	RETAINER.....	2
71	PADZZ	5999010540593	58536	A-55485/02-004D	MOUNTING PAD,ELECTR.....	1
72	XADZZ		91506	PPS101-1A1321L	IC SOCKET.....	1
73	XDDZZ		76381	75 1/2	.TAPE.....	1
74	PADZZ	5999010153901	81349	M38527/01-030D	MOUNTING PAD,ELECTR.....	3
75	PADZZ	5310009826580	96906	MS27183-1	WASHER,FLAT.....	9
76	XADZZ		S7040	MP6704186-0	STIFFNER.....	1
77	PADZZ	5305000545639	96906	MS51957-5	SCREW,MACHINE.....	4

END OF FIGURE

NOTE

Above SM&R codes are for the U.S. Army.

Table C-6. CPDU Muzzle Velocity Processor CCA, P/N AY6706703-0 (Sheet 3 of 6)

(1) ITEM NO.	(2) SM&R CODE	(3) CAGEC	(4) PART NUMBER	(5) DESCRIPTION AND USABLE ON CODES (UOC)	(6) QTY
				MVP CCA (P/N AY6706703-0)	
1	PAFZZ	81349	M39014/22-1094	CAPACITOR, FIXED (C1-C7, C9-C11, C13-C20, C22-C24, C27-C29, C31-C37, C41, C43, C46-C49, C53, C54, C59-C61, C63-C66, C68, C69)	48
2	PAFZZ	81349	M39003/01-2848	CAPACITOR, FIXED (C38, C39)	2
3	PAFZZ	81349	M39003/01-8032	CAPACITOR, FIXED (C42)	1
4	PAFZZ	81349	M39003/03-3025	CAPACITOR, FIXED (C44)	1
5	PAFZZ	81349	M39014/22-1079	CAPACITOR, FIXED (C50, C51)	2
6	PAFZZ	81349	M39003/01-8048	CAPACITOR, FIXED (C52)	1
7	PAFZZ	81349	M39014/22-0675	CAPACITOR, FIXED (C55)	1
8	PAFZZ	81349	M39014/22-1011	CAPACITOR, FIXED (C56, C57)	2
9	PAFZZ	81349	CCR05CJ6R8BS	CAPACITOR, FIXED (C58)	1
9a	PAFZZ	81349	CCR05CJ6R8CR	CAPACITOR, FIXED (C58)	ALT
10	PAFZZ	81349	JANTX1N4148-1	SEMICONDUCTOR (CR1, CR2, CR4, CR7, CR8, CR29-CR34)	11
11	PAFZZ	81349	JANTX1N4626	SEMICONDUCTOR (CR12, CR13)	2
12	PAFZZ	81349	JANTX1N756A	SEMICONDUCTOR (CR5, CR6)	2
13	PAFZZ	81349	JANTX1N758A-1	SEMICONDUCTOR (CR9-CR11)	3
14	PAFZZ	81349	M55302/131-01	CONNECTOR (P1, P3)	2
15	PAFZZ	81349	M55302/64-B60F	CONNECTOR (P2)	1
16	PADZZ	81349	JANTX2N2905AL	TRANSISTOR (Q1)	1
17	PADZZ	81349	JANTX2N2222A	TRANSISTOR (Q2, Q3)	2
18	PAFZZ	81349	RLR07C1003FS	RESISTOR (R104-R107, R110, R113, R115)	7
19	PAFZZ	81349	RLR07C1201GS	RESISTOR (R108)	1
20	PADZZ	81349	RLR07C3321FS	RESISTOR (R109)	1
21	PAFZZ	81349	RLR07C1742FS	RESISTOR (R11)	1
22	PAFZZ	81349	RLR07C1202GS	RESISTOR (R14, R15)	2
23	PAFZZ	81349	RLR07C3900GS	RESISTOR (R31)	1
24	PAFZZ	81349	RLR07C1001GS	RESISTOR (R34, R64, R65)	3
25	PAFZZ	81349	RLR07C20R0GS	RESISTOR (R35, R36, R60, R61, R95, R102	6

Table C-6. CPDU Muzzle Velocity Processor CCA, P/N AY6706703-0 (Sheet 4 of 6)

(1) ITEM NO.	(2) SM&R CODE	(3) CAGEC	(4) PART NUMBER	(5) DESCRIPTION AND USABLE ON CODES (UOC)	(6) QTY
26	PAFZZ	81349	RLR07C1002GS	RESISTOR (R37-R39, R43, R45-R48, R51, R52, R55, R58, R59).....	13
27	PAFZZ	81349	RLR07C5601GS	RESISTOR (R4, R56, R49, R90, R94, R96-R98, R101, R111).....	10
28	PAFZZ	81349	RLR07C2203GS	RESISTOR (R40, R41).....	2
29	PAFZZ	81349	RLR07C6800GS	RESISTOR (R42, R44).....	2
30	PAFZZ	81349	RLR07C2003GS	RESISTOR (R50).....	1
31	PAFZZ	81349	RLR07C1601GS	RESISTOR (R53, R54).....	2
32	PAFZZ	81349	RCR07G106JS	RESISTOR (R57).....	1
33	PAFZZ	81349	RLR07C2200GS	RESISTOR (R6).....	1
34	PAFZZ	81349	RLR07C2001GS	RESISTOR (R8, R12).....	2
35	PAFZZ	81349	RLR07C1503GS	RESISTOR (R5).....	1
36	PAFZZ	81349	M38510/65701BCA	MICROCIRCUIT (U11)	1
37	PAFZZ	81349	M38510/65802BEA	MICROCIRCUIT (U14)	1
38	PAFZZ	27014	MM54HC273J/883B	MICROCIRCUIT (U17)	1
39	PADZZ	27014	MM54HC08J/883B	MICROCIRCUIT (U18)	1
40	PAFZZ	27014	MM54HC32J/883B	MICROCIRCUIT (U19)	1
41	PAFZZ	27014	MM54C244J-MIL	MICROCIRCUIT (U2)	1
42	PAFZZ	27014	MM54C244J-MIL	MICROCIRCUIT (U21)	1
43	PAFZZ	6Y440	MT5C2568C-55L/88	SRAM (U23, U31)	2
44	MFFFF	S7040	MC6706585-0	EPROM L (U24).....	1
45	MFFFF	34335	MC6706586-0	EPROM M (U25).....	1
46	MFFFF	S7040	MC6706587-0	EPROM H (U26)	1
47	PAFZZ	81349	M55310/16-B41A	CRYSTAL (U27).....	1
48	PAFZZ	81349	M38510/65702BCA	MICROCIRCUIT (U28)	1
49	PAFZZ	81349	M38510/11201BCA	MICROCIRCUIT (U29, U41).....	2
50	PAFZZ	64155	LT1080MJ/883B	MICROCIRCUIT (U30)	1

Table C-6. CPDU Muzzle Velocity Processor CCA, P/N AY6706703-0 (Sheet 5 of 6)

(1) ITEM NO.	(2) SM&R CODE	(3) CAGEC	(4) PART NUMBER	(5) DESCRIPTION AND USABLE ON CODES (UOC)	(6) QTY
51	PAFZZ	22915	340475	MICROCIRCUIT (U36)	1
52	PAFZZ	89305	033759-2	MICROCIRCUIT (U37)	1
53	PAFZZ	27014	MM54HC245J/883B	MICROCIRCUIT (U38)	1
54	PAFZZ	67268	8406501JA	MICROCIRCUIT (U4)	1
55	PAFZZ	34649	MD8251A/B	MICROCIRCUIT (U5)	1
56	PAFZZ	67268	5962-8956101EA	MICROCIRCUIT (U7)	1
57	PAFZZ	1ES66	MAX695MJE/883B	SUPERVISOR, 16 DIP (U33)	1
57a	PAFZZ	1ES66	MAX691MJA/883B	SUPERVISOR, 16 DIP (U33)	ALT
57b	PAFZZ	1ES66	MAX691AMJA/883B	SUPERVISOR, 16 DIP (U33)	ALT
58	PAFZZ	24335	ADSP2100ASG	MICROCIRCUIT (U34)	1
59	PAFZZ	81349	M8340109K5601GC	RESISTOR, FIXED FILM (Z11-Z14, Z17)	5
60	XAFZZ	S7040	PC6706556-0	PRINTED WIRE BOARD	1
61	XBFZZ	S7040	MP6706582-0	HOUSING	1
62	MFFZZ	S7040	62-10-1010-1674	THERMAL SHEET	AR
63	PAFZZ	80205	NAS620C4	WASHER	6
64	PAFZZ	96906	MS51957-15	SCREW	6
65	PAFZZ	96906	MS35338-134	WASHER	4
66	PAFZZ	96906	MS51957-7	SCREW	4
67	PAFZZ	80205	NAS620C2	WASHER	16
68	PAFZZ	80205	NAS671C2	NUT	8
69	PAFZZ	96906	MS20426AD2-4	RIVET	13
70	XBFZZ	52094	V225-4.80HR	RETAINER	2
71	PAFZZ	58536	A-55485/02-004D	MOUNTING PAD	1
72	PAFZZ	91506	PPS101-1A1321L	IC SOCKET	1
72a	PAFZZ	06776	PGA-101-AH3-S-TG30	IC SOCKET	ALT

Table C-6. CPDU Muzzle Velocity Processor CCA, P/N AY6706703-0 (Sheet 6 of 6)

(1) ITEM NO.	(2) SM&R CODE	(3) CAGEC	(4) PART NUMBER	(5) DESCRIPTION AND USABLE ON CODES (UOC)	(6) QTY
73	PAFZZ	76381	75 1/2	TAPE.....	AR
74	PAFZZ	81349	M38527/01-030D	MOUNTING PAD.....	3
75	PAFZZ	96906	MS27183-1	WASHER.....	9
76	PAFZZ	S7040	MP6704186-0	STIFFENER.....	1
77	PAFZZ	96906	MS51957-5	SCREW.....	4
				END OF FIGURE	

NOTE

Above SM&R codes are for the U.S. Marine Corps.

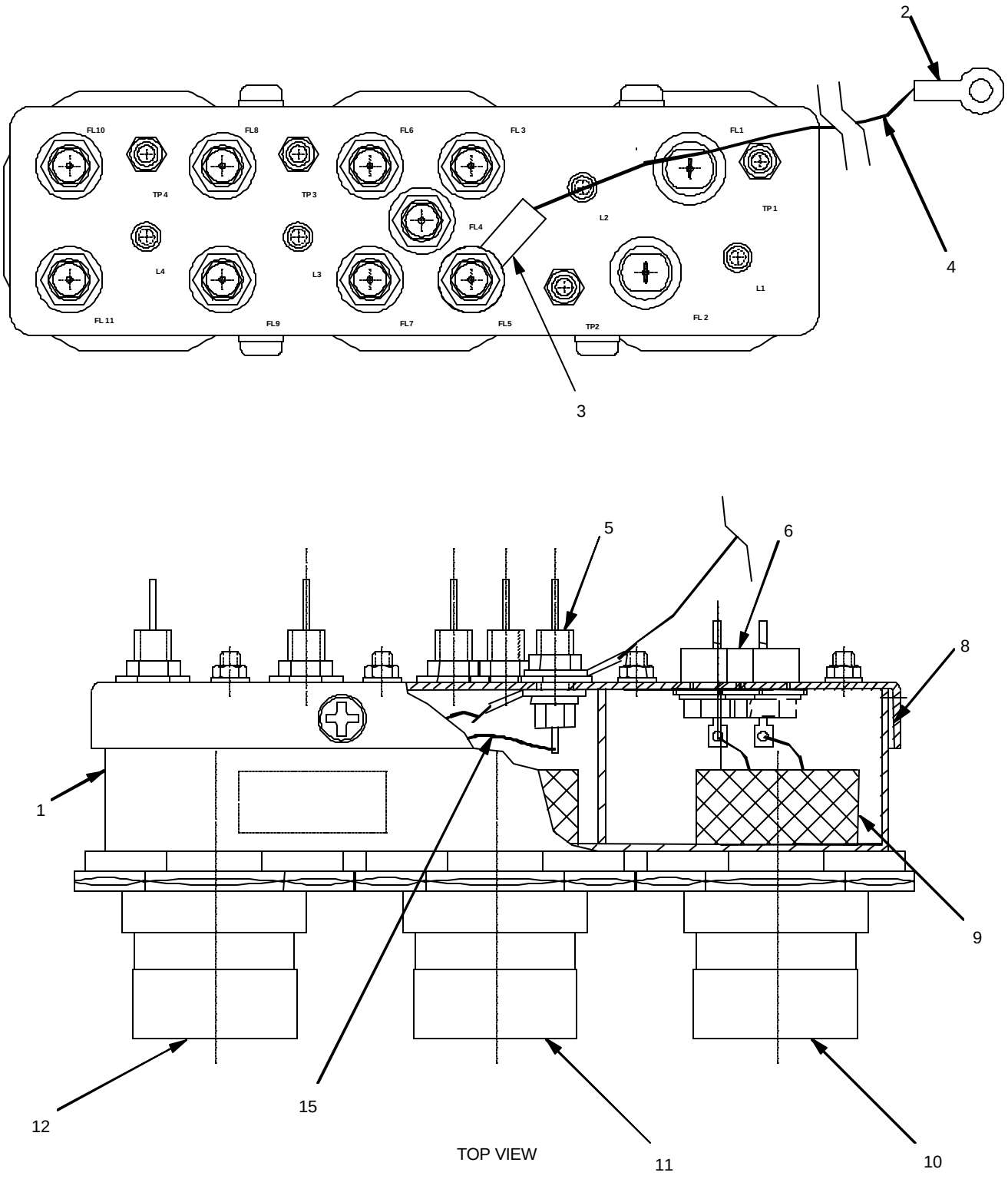

Figure C-7. EMI Module, P/N AY6706705-1 (Sheet 1 of 2)

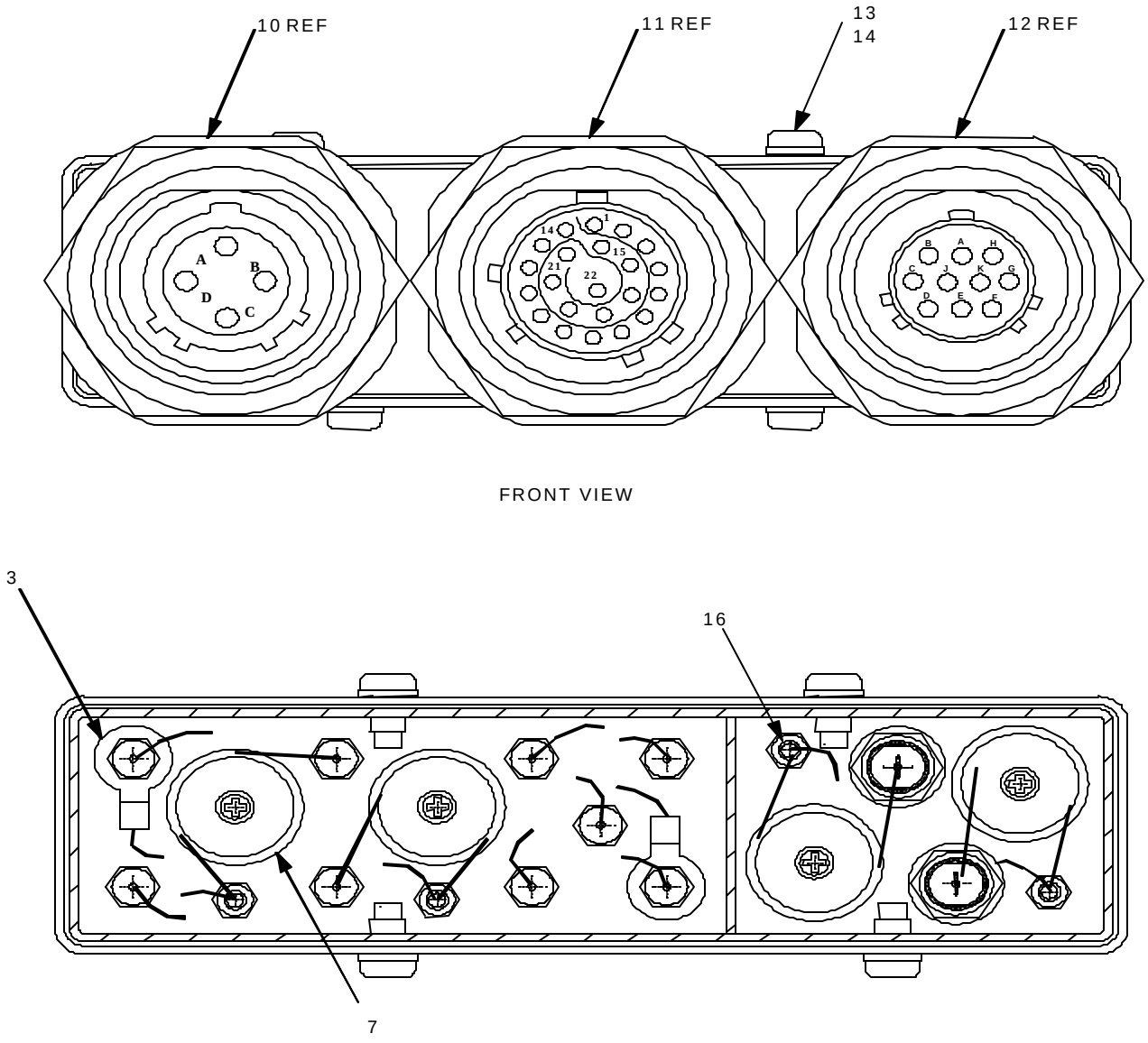

Figure C-7. EMI Module, P/N AY6706705-1 (Sheet 2 of 2)

Table C-7. EMI Module, P/N AY6706705-1 (Sheet 1 of 2)

SECTION II		TM9-1290-364-14&P				
(1)	(2)	(3)	(4)	(5)	(6)	(7)
ITEM NO	SMR CODE	NSN	CAGEC	PART NUMBER	DESCRIPTION AND USABLE ON CODES(UOC)	QTY
					GROUP 0105 FIGURE C-7	
					EMI MODULE (P/N AY6706705-1)	
1	XAFZZ		S7040	AM6706577-1	EMI,COVER	1
2	PAFZZ	5940001139828	96906	MS25036-148	TERMINAL,LUG	1
3	PAFZZ	5940005571629	96906	MS25036-149	TERMINAL,LUG	3
4	PAFZZ	6145009457467	81349	M22759/11-22-0	.WIRE,ELECTRICAL	1
5	PAFZZ	5915011047414	81349	M15733/61-0008	FILTER,RADIO FREQUE	9
6	PAFZZ	5915011483294	81349	M15733/49-0006	FILTER,RADIO FREQUE	2
7	PAFZZ	5950014443675	S7040	TM6708198-0	COIL	4
8	XAFZZ		S7040	AM6706578-2	EMI BOX	1
9	PAFZZ	5310014451483	S7040	MP6706700-0	KNOB	3
10	PAFZA	5935014445256	81349	D38999/24WC4PN	CONNECTOR,RECEPTACL	1
11	PAFZA	5935011670815	81349	D38999/24WC35PN	CONNECTOR,RECEPTACL	1
12	PAFZA	5935012011452	81349	D38999/24WC98SN	CONNECTOR,RECEPTACL	1
13	PAFZZ	5305000545648	96906	MS51957-14	SCREW,MACHINE	3
14	PAFZZ	5310007239676	80205	NAS620C4L	WASHER,FLAT	3
15	PAFZA	6145009489479	81349	M22759/11-24/9	.WIRE,ELECTRICAL	1
16	PAFZZ	5940014431937	81349	SE182E01S	TERMINAL,STUD	4
					END OF FIGURE	

NOTE

Above SM&R codes are for the U.S. Army.

Table C-7. EMI Module, P/N AY6706705-1 (Sheet 2 of 2)

(1) ITEM NO.	(2) SM&R CODE	(3) CAGEC	(4) PART NUMBER	(5) DESCRIPTION AND USABLE ON CODES (UOC)	(6) QTY
				EMI MODULE (P/N AY6706705-1)	
1	XBFZZ	S7040	AM6706577-1	COVER, EMI	1
2	PAFZZ	96906	MS25036-148	LUG, TERMINAL	1
3	PAFZZ	96906	MS25036-149	LUG, TERMINAL	3
4	PAFZZ	81349	M16878/4BFE0	WIRE, ELECTRICAL	A/R
5	PAFZZ	81349	M15733/61-0008	FILTER	9
6	PAFZZ	81349	M15733/49-0006	FILTER	2
7	PAFZZ	S7040	TM6708198-0	EMI CHOKE	4
8	PAFFF	S7040	AM6706578-2	EMI BOX	1
9	PAFZZ	S7040	MP6706700-0	GROMMET, NUT	3
10	PAFZZ	81349	D38999/ 24WC4PN	CONNECTOR, RECEPTACLE, ELECTRICAL, J1	1
11	PAFZZ	81349	D38999/ 24WC35PN	CONNECTOR, RECEPTACLE, ELECTRICAL, J2	1
12	PAFZZ	81349	D38999/ 24WC98SN	CONNECTOR, RECEPTACLE, ELECTRICAL, J3	2
13	PAFZZ	96906	MS51957-14	SCREW	4
14	PAFZZ	80205	NAS620C4L	WASHER	4
15	PAFZZ	81349	M16878/4BFE9	WIRE, ELECTRICAL	A/R
16	PAFZZ	81349	SE182E01S	STUD, TERMINAL	4
				END OF FIGURE	

NOTE

Above SM&R codes are for the U.S. Marine Corps.

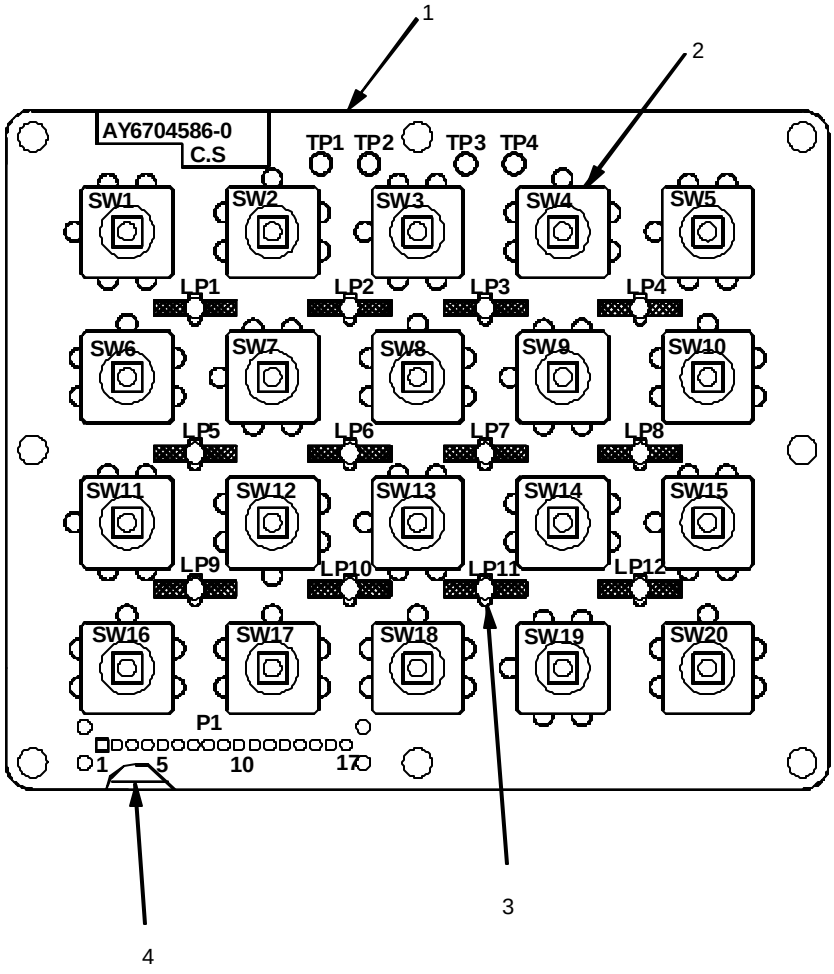

Figure C-8. Keyboard CCA, P/N AY6704586-0

Table C-8. Keyboard CCA, P/N AY6704586-0

SECTION II		TM9-1290-364-14&P				
(1)	(2)	(3)	(4)	(5)	(6)	(7)
ITEM NO	SMR CODE	NSN	CAGEC	PART NUMBER	DESCRIPTION AND USABLE ON CODES(UOC)	QTY
					GROUP 0106 FIGURE C-8	
					KEYBOARD CCA (P/N AY6704586-0)	
1	XAFZZ		S7040	PC6704585-0	PRINTED WIRE BOARD.....	1
2	PAFZZ	5930014595737	61964	B3F-4055	SWITCH.....	20
3	PAFZZ	6240014521253	S7040	OL3091	LAMP 28V.....	12
4	PAFZZ	5935014443314	06090	201M17TO3L	ADAPTER,CONNECTOR.....	1

END OF FIGURE

NOTE

Above SM&R codes are for both the U.S. Army and U.S. Marine Corps.

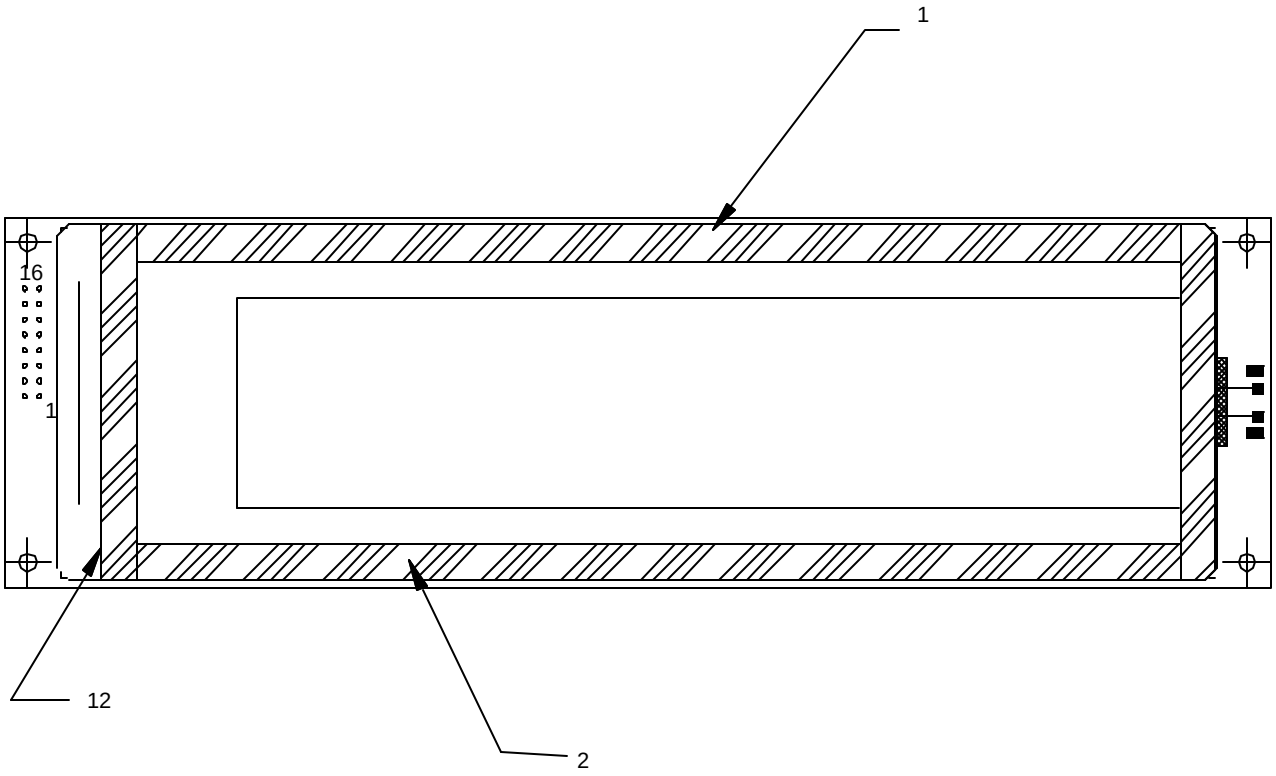

FRONT VIEW

Figure C-9. CPDU Display Module, P/N AY6706702-1 (Sheet 1 of 2)

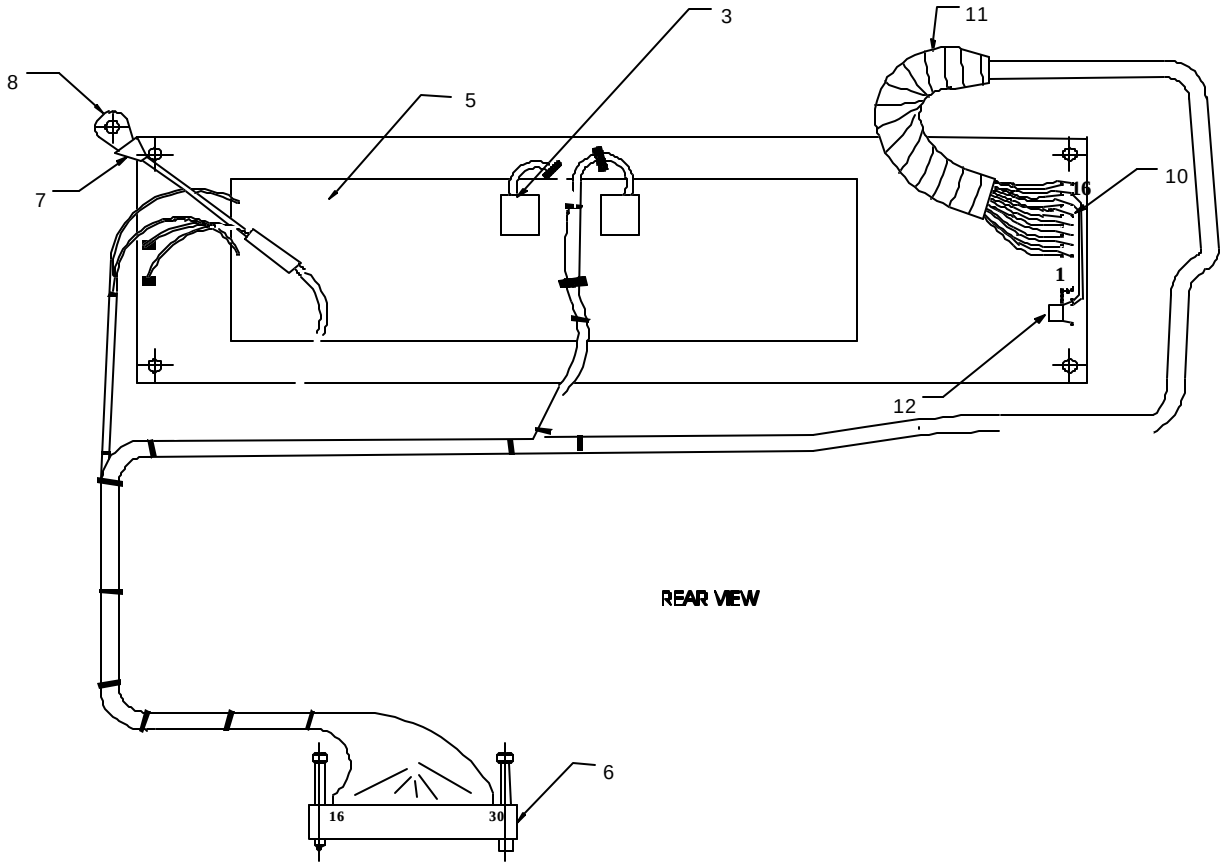

Figure C-9. CPDU Display Module, P/N AY6706702-1 (Sheet 2 of 2)

Table C-9. CPDU Display Module, P/N AY6706702-1 (Sheet 1 of 2)

SECTION II		TM9-1290-364-14&P				
(1)	(2)	(3)	(4)	(5)	(6)	(7)
ITEM NO	SMR CODE	NSN	CAGEC	PART NUMBER	DESCRIPTION AND USABLE ON CODES(UOC)	QTY
				GROUP 0107 FIGURE C-9		
					CPDU DISPLAY MODULE, P/N AY6706702-1	
1	XBFZZ		S7040	MP6706699-0	RUBBER CUSHION.....	4
2	XDFZZ		62483	LM44B4C40CBH	DISPLAY,OPTOELECTRO.....	1
3	PAFZZ	5905014794521	09359	S7752NXY15A	RESISTOR.....	2
4	XBFZZ		09359	HK19471	HEATER.....	1
5	XBFZZ		09359	HK5336R809L12D	HEATER.....	1
6	PAFZZ	5935014433418	81349	M55302/66L-305	CONNECTOR,RECEPTACL.....	1
7	PAFZZ	5970000823942	81349	M23053/5-105-9	INSULATION SLEEVING.....	1
8	PAFZZ	5940014775550	98571	1107022	TERMINAL,LUG.....	1
9	PAFZZ	4020007536555	19200	1054521	TAPE,LACING AND TYI.....	1
10	PAFZA	6145009498006	81349	M22759/11-22-9	WIRE,ELECTRICAL.....	1
				END OF FIGURE		

NOTE

Above SM&R codes are for the U.S. Army.

Table C-9. CPDU Display Module, P/N AY6706702-1 (Sheet 2 of 2)

(1) ITEM NO.	(2) SM&R CODE	(3) CAGEC	(4) PART NUMBER	(5) DESCRIPTION AND USABLE ON CODES (UOC)	(6) QTY
				CPDU DISPLAY MODULE (P/N AY6706702-0)	
1	XBFZZ	S7040	MP6706699-0	RUBBER	4
2	PAFZZ	62483	LM44B4C40CBH	DISPLAY	1
3	PAFZZ	09359	S7752NXY15A	SENSOR, TEMPERATURE	2
4	XBFZZ	09359	HK19471	HEATER	1
5	XBFZZ	09359	HK5336R809L12D	HEATER	1
6	PAFZZ	81349	M55302/66L-305	CONNECTOR, P5	1
7	PAFZZ	81349	M23053/5-105-9	INSULATION, SLEEVING	A/R
8	PAFZZ	98571	1107022	LUG, TERMINAL	1
9	PAFZZ	81349	MIL-T-43435T1S3F	WIRE, LACING	AR
10	PAFZZ	81349	M16878/4BFE9	WIRE	AR
11		76381	361	TAPE INSULATION GLASS CLOTH .5” WIDE	AR
11a		FLUORGLAS	2915-7	TAPE INSULATION GLASS CLOTH .5” WIDE	ALT
12			C315C471K2G5CA	CAPACITOR, FIXED (C7)	1
				END OF FIGURE	

NOTE

Above SM&R codes are for the U.S. Marine Corps.

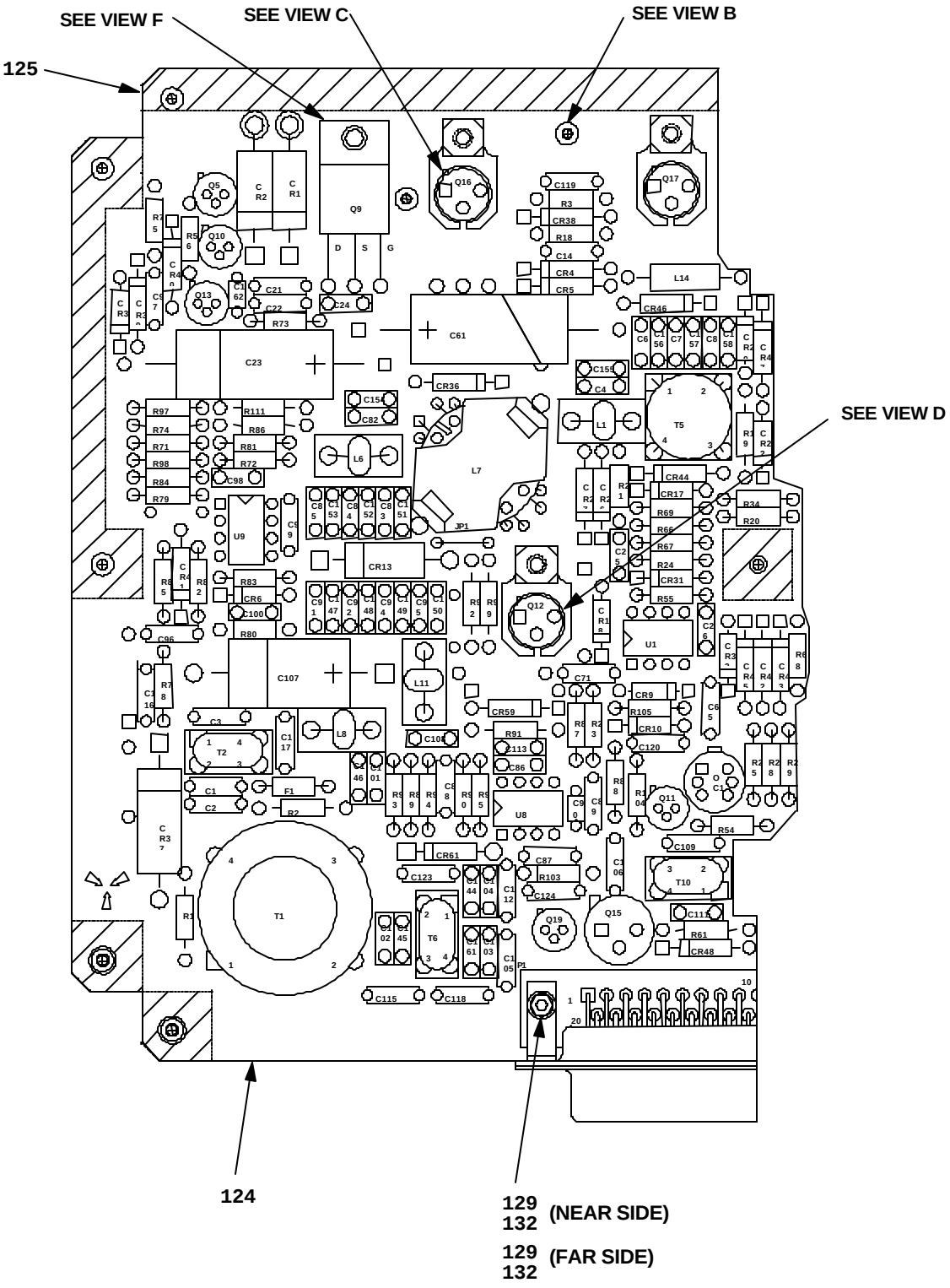

Figure C-10. Power Supply CCA, P/N AY6706612-0 (Sheet 1 of 7)

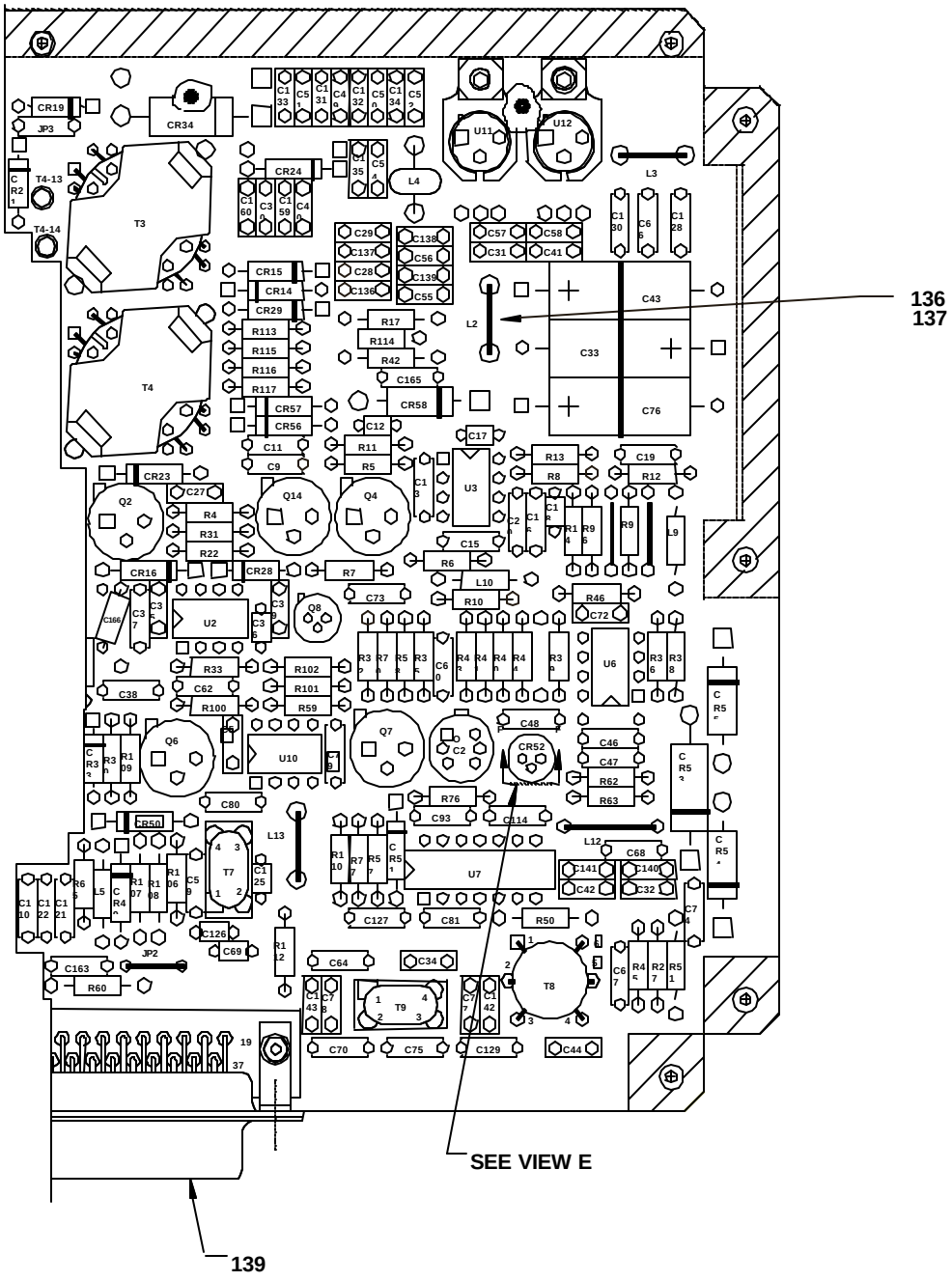

Figure C-10. Power Supply CCA, P/N AY6706612-0 (Sheet 2 of 7)

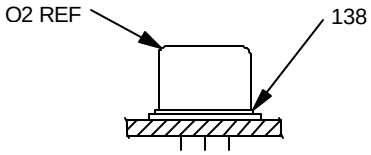

DETAIL VIEW A

8 PL (Q2, Q4, Q6, Q7, Q14, Q15, OC1, OC2)

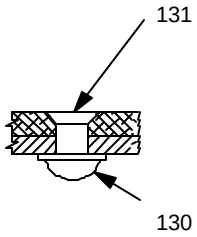

DETAIL VIEW B

4 PL

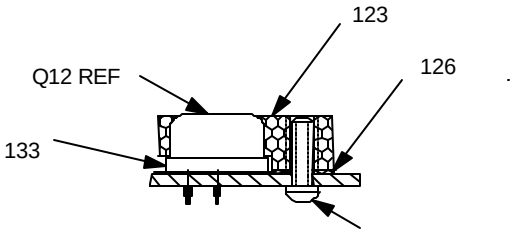

DETAIL VIEW D

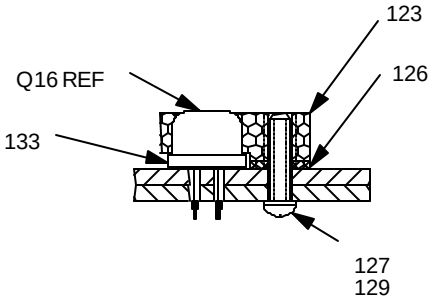

DETAIL VIEW C

4 PL (Q16, Q17, U11, U12)

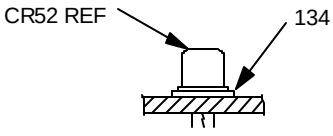

DETAIL VIEW E

7 PL (CR52, Q5, Q8, Q10, Q11, Q13, Q19)

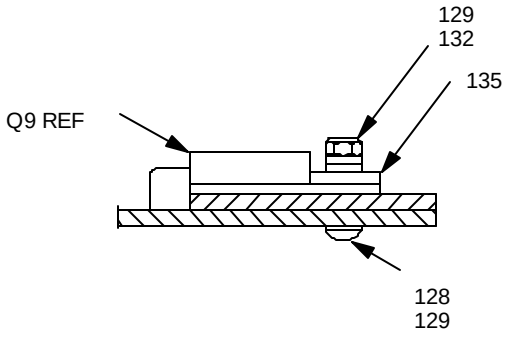

DETAIL VIEW F

Figure C-10. Power Supply CCA, P/N AY6706612-0 (Sheet 3 of 7)

LEGEND

REF DES	ITEM NO.	REF DES	ITEM NO.	REF DES	ITEM NO.
C1	1	C34	2	C69	4
C2	1	C35	2	C70	5
C3	1	C36	4	C71	12
C4	2	C37	9	C72	2
C5	2	C38	6	C73	6
C6	2	C39	2	C74	5
C7	2	C40	2	C75	5
C8	2	C41	2	C76	13
C9	3	C42	2	C77	2
C11	3	C43	8	C78	2
C12	4	C44	2	C79	6
C13	5	C46	10	C80	6
C14	6	C47	6	C81	14
C15	6	C48	6	C82	2
C16	6	C49	2	C83	2
C17	4	C50	2	C84	2
C18	4	C51	2	C85	2
C19	5	C52	2	C86	2
C20	5	C54	2	C87	6
C21	1	C55	2	C88	15
C22	1	C56	2	C89	16
C23	7	C57	2	C90	4
C24	2	C58	2	C91	2
C25	2	C59	6	C92	2
C26	2	C60	6	C93	5
C27	2	C61	7	C94	2
C28	2	C62	11	C95	2
C29	2	C64	5	C96	6
C30	2	C65	6	C97	6
C31	2	C66	5	C98	2
C32	2	C67	5	C99	5
C33	8	C68	5	C100	2

Figure C-10. Power Supply CCA, P/N AY6706612-0 (Sheet 4 of 7)

LEGEND

REF DES	ITEM NO.	REF DES	ITEM NO.	REF DES	ITEM NO.
C101	2	C133	2	C166	10
C102	2	C134	2	CR1	21
C103	2	C135	2	CR2	21
C104	2	C136	2	CR3	22
C105	5	C137	2	CR4	23
C106	5	C138	2	CR5	23
C107	17	C139	2	CR6	22
C108	2	C140	2	CR9	22
C109	6	C141	2	CR10	22
C110	5	C142	2	CR13	24
C111	2	C143	2	CR14	25
C112	5	C144	2	CR15	25
C113	2	C145	2	CR16	23
C114	10	C146	2	CR17	22
C115	5	C147	2	CR18	22
C116	5	C148	2	CR19	23
C117	5	C149	2	CR20	22
C118	5	C150	2	CR21	23
C119	6	C151	2	CR22	22
C120	18	C152	2	CR23	23
C121	5	C153	2	CR24	23
C122	5	C154	2	CR26	26
C123	5	C155	2	CR27	26
C124	5	C156	2	CR28	22
C125	4	C157	2	CR29	23
C126	4	C158	2	CR31	22
C127	5	C159	2	CR32	22
C128	5	C160	2	CR33	22
C129	5	C161	2	CR34	24
C130	5	C162	19	CR36	27
C131	2	C163	6	CR37	28
C132	2	C165	6	CR38	29

Figure C-10. Power Supply CCA, P/N AY6706612-0 (Sheet 5 of 7)

LEGEND

REF DES	ITEM NO.	REF DES	ITEM NO.	REF DES	ITEM NO.
CR39	27	L12	47	R12	59
CR40	29	L13	47	R13	66
CR41	30	L14	48	R14	66
CR42	31	OC1	49	R15	62
CR43	32	OC2	49	R16	62
CR44	33	Q2	50	R17	57
CR45	34	Q4	51	R18	67
CR46	35	Q5	52	R19	68
CR47	36	Q6	53	E20	69
CR48	34	Q7	53	R21	70
CR49	31	Q8	54	R22	71
CR50	34	Q9	55	R23	70
CR51	34	Q10	54	R24	72
CR52	37	Q11	54	R25	73
CR53	20	Q12	53	R27	74
CR54	38	Q13	54	R28	71
CR55	38	Q14	56	R29	65
CR56	31	Q15	58	R30	75
CR57	31	Q16	53	R31	74
CR58	39	Q17	60	R32	62
CR59	35	Q19	54	R33	62
CR61	40	R1	57	R34	76
F1	41	R2	57	R35	62
L1	42	R3	59	R36	76
L4	43	R4	61	R38	77
L5	44	R5	61	R39	67
L6	42	R6	62	R40	62
L7	45	R7	62	R41	78
L8	46	R8	63	R42	57
L9	44	R9	64	R43	79
L10	44	R10	59	R44	80
L11	46	R11	65	R45	74

Figure C-10. Power Supply CCA, P/N AY6706612-0 (Sheet 6 of 7)

LEGEND

REF DES	ITEM NO.	REF DES	ITEM NO.	REF DES	ITEM NO.
R46	76	R83	64	R114	107
R50	57	R84	72	R115	84
R51	57	R85	64	R116	64
R54	81	R86	97	R117	70
R55	82	R87	77	T1	108
R56	83	R88	64	T2	109
R57	76	R89	98	T3	110
R58	84	R90	66	T4	111
R59	85	R91	99	T5	112
R60	84	R92	100	T6	109
R61	86	R93	101	T7	113
R62	87	R94	102	T8	114
R64	70	R95	76	T9	113
R65	66	R96	62	T10	109
R66	89	R97	103	U1	115
R67	90	R98	86	U2	116
R68	91	R99	100	U6	117
R69	64	R100	104	U7	118
R70	92	R101	70	U8	116
R71	93	R102	64	U9	119
R72	59	R103	105	U10	120
R73	94	R104	67	U11	121
R74	82	R105	105	U12	122
R75	95	R106	76		
R76	76	R107	88		
R77	64	R108	106		
R78	76	R109	64		
R79	67	R110	76		
R80	93	R111	97		
R81	93	R112	64		
R82	96	R113	85		

Figure C-10. Power Supply CCA, P/N AY6706612-0 (Sheet 7 of 7)

Table C-10. Power Supply CCA, P/N AY6706612-0 (Sheet 1 of 9)

SECTION II		TM9-1290-364-14&P				
(1)	(2)	(3)	(4)	(5)	(6)	(7)
ITEM NO	SMR CODE	NSN	CAGEC	PART NUMBER	DESCRIPTION AND USABLE ON CODES(UOC)	QTY
					GROUP 0108 FIGURE C-10	
					CPDU HARNESS ASSEMBLY (P/N WA6706707-0)	
1	PADZZ	5910012171761	81349	M39014/22-1132	CAPACITOR,FIXED,CER.....	5
2	PADZZ	5910000108721	81349	M39014/02-1419	CAPACITOR,FIXED,CER.....	82
3	PADZZ	5910012115029	81349	M39014/22-1114	CAPACITOR,FIXED,CER.....	2
4	PADZZ	5910000108666	81349	M39014/01-1357	CAPACITOR,FIXED,CER.....	8
5	PADZZ	5910012321147	81349	M39014/22-1047	CAPACITOR,FIXED,CER.....	28
6	PADZZ	5910011718693	81349	M39014/22-1094	CAPACITOR,FIXED,CER.....	20
7	PADZZ	5910011194313	81349	M39006/22-0660	CAPACITOR,FIXED,ELE.....	2
8	PADZZ	5910013672735	81349	M39006/22-0550	CAPACITOR,FIXED,ELE.....	2
9	PADZZ	5910012264614	81349	M39014/22-0975	CAPACITOR,FIXED,CER.....	1
10	PADZZ	5910011881671	81349	M39014/22-1091	CAPACITOR,FIXED,CER.....	2
11	PADZZ	5910011999024	81349	M39014/22-0980	CAPACITOR,FIXED,CER.....	1
12	PADZZ	5910012542037	81349	M39014/22-1150	CAPACITOR,FIXED,CER.....	1
13	XADZZ		81349	M39003/09-4029	CAPACITOR,FIXED,ELE.....	1
14	PADZZ	5910011718693	81349	M39014/22-1094	CAPACITOR,FIXED,CER.....	1
15	PADZZ	5910011718689	81349	M39014/22-1070	CAPACITOR,FIXED,CER.....	1
16	PADZZ	5910011655127	81349	M39014/22-1067	CAPACITOR,FIXED,CER.....	1
17	PADZZ	5910011194302	81349	M39006/22-0571	CAPACITOR,FIXED,ELE.....	1
18	PADZZ	5910011718690	81349	M39014/22-0986	CAPACITOR,FIXED,CER.....	1
19	PADZZ	5910012142907	81349	CCR05CG221GS	CAPACITOR,FIXED,CER.....	1
20	PADZZ	5961012390829	81349	JANTX1N5969	SEMICONDUCTOR DEVIC.....	1
21	PADZZ	5961004033298	81349	JANTX1N5552	SEMICONDUCTOR DEVIC.....	2
22	PADZZ	5961005844527	81349	JANTX1N4148-1	SEMICONDUCTOR DEVIC.....	12
23	PADZZ	5961010374712	81349	JANTX1N5806	SEMICONDUCTOR DEVIC.....	8
24	PADZZ	5961010586633	81349	JANTX1N5811	SEMICONDUCTOR DEVIC.....	2
25	PADZZ	5961013817429	81349	JANTX1N6621	SEMICONDUCTOR DEVIC.....	2
26	PADZZ	5961010681652	81349	JANTX1N5311	SEMICONDUCTOR DEVIC.....	2
27	PADZZ	5961010096320	81349	JANTX1N4478	SEMICONDUCTOR DEVIC.....	2
28	XDDZZ		81349	JANTX1N6064A	SEMICONDUCTOR DEVIC.....	1
29	PADZZ	5961011050608	81349	JANTX1N965B-1	SEMICONDUCTOR DEVIC.....	2
30	PADZZ	5961012862189	81349	JANTX1N4618-1	SEMICONDUCTOR DEVIC.....	1
31	PADZZ	5961010242145	81349	JANTX1N4625	SEMICONDUCTOR DEVIC.....	4
32	PADZZ	5961010644876	81349	JANTX1N966B-1	SEMICONDUCTOR DEVIC.....	1
33	PADZZ	5961010092234	81349	JANTX1N4104	SEMICONDUCTOR DEVIC.....	1
34	PADZZ	5961010330830	81349	JANTX1N4101	SEMICONDUCTOR DEVIC.....	4
35	XDDZZ		81349	JANTXV1N4469	SEMICONDUCTOR DEVIC.....	2
36	PADZZ	5961011212301	81349	JANTX1N971B-1	SEMICONDUCTOR DEVIC.....	1
37	PADZZ	5962011604990	64155	LM136AH-2.5/883	MICROCIRCUIT,LINEAR.....	1
38	PADZZ	5961004586778	81349	JANTX1N4964	SEMICONDUCTOR DEVIC.....	2
39	PADZZ	5961010699546	81349	JANTX1N4988	SEMICONDUCTOR DEVIC.....	1
40	PADZZ	5961004720086	81349	JANTX1N4969	SEMICONDUCTOR DEVIC.....	1
41	PADZZ	5920014639082	75915	253002	FUSE.....	1
42	XADZZ		S7040	TM6705334-0	INDUCTOR.....	2
43	PADZZ	5950014432165	S7040	TM6705578-0	COIL,ELECTRICAL.....	1
44	PADZZ	5950000354425	96906	MS75085-7	COIL,RADIO FREQUENC.....	3
45	PADZZ	5950014432153	S7040	TM6705335-0	COIL,ELECTRICAL.....	1
46	PADZZ	5950014432163	S7040	TM6705336-0	COIL,ELECTRICAL.....	2

Table C-10. Power Supply CCA, P/N AY6706612-0 (Sheet 2 of 9)

SECTION II			TM9-1290-364-14&P			
(1) ITEM NO	(2) SMR CODE	(3) NSN	(4) CAGEC	(5) PART NUMBER	(6) DESCRIPTION AND USABLE ON CODES(UOC)	(7) QTY
47	PADZZ	5950014432161	S7040	TM6706675-0	COIL,ELECTRICAL.....	2
48	XDDZZ		96906	MS18130-7	COIL,RADIO FREQUENC.....	1
49	PADZZ	5980011590947	81349	JANTX4N49	COUPLER,OPTOELECTRO.....	2
50	PADZZ	5961012526143	81349	JANTX2N6784	TRANSISTOR.....	1
51	PADZZ	5961010168475	81349	JANTX2N5416	TRANSISTOR.....	1
52	PADZZ	5961010194947	81349	JANTXV2N2907A	TRANSISTOR.....	1
53	PADZZ	5961011969452	81349	JANTX2N6796	TRANSISTOR.....	4
54	PADZA	5961008583826	81349	JANTX2N2222A	TRANSISTOR.....	5
55	PADZZ	5961013582682	81349	JANTX2N7224	TRANSISTOR.....	1
56	PADZZ	5961008628738	81349	JANTX2N3439	TRANSISTOR.....	1
57	PADZZ	5905010824272	81349	RWR81S1001FS	RESISTOR,FIXED,WIRE.....	6
58	PADZZ	5961012573586	81349	JANTX2N6849	TRANSISTOR.....	1
59	PADZZ	5905011715638	81349	RLR05C2002FS	RESISTOR,FIXED,FILM.....	4
60	PADZZ	5961012174121	81349	JANTX2N6798	TRANSISTOR.....	1
61	PADZZ	5905011763862	81349	RLR05C3320FS	RESISTOR,FIXED,FILM.....	2
62	PADZZ	5905011863783	81349	RLR05C4751FS	RESISTOR,FIXED,FILM.....	7
63	PADZZ	5905011951355	81349	RLR05C6982FS	RESISTOR,FIXED,FILM.....	1
64	PADZZ	5905011700380	81349	RLR05C1002FS	RESISTOR,FIXED,FILM.....	10
65	PADZZ	5905012233416	81349	RLR05C2743FS	RESISTOR,FIXED,FILM.....	2
66	PADZZ	5905012102506	81349	RLR05C1000FS	RESISTOR,FIXED,FILM.....	4
67	PADZZ	5905011767343	81349	RLR05C47R0GS	RESISTOR,FIXED,FILM.....	4
68	PADZZ	5905011750159	81349	RWR81S4R75FS	RESISTOR,FIXED,WIRE.....	1
69	PADZZ	5905013742830	81349	RLR05C11R8FS	RESISTOR,FIXED,FILM.....	1
70	XDDZZ		81349	RLR05C1004FR	RESISTOR,FIXED,FILM.....	5
71	PADZZ	5905011864912	81349	RLR05C4752FS	RESISTOR,FIXED,FILM.....	2
72	PADZZ	5905011690047	81349	RLR05C1003FS	RESISTOR,FIXED,FILM.....	2
73	PADZZ	5905014455923	81349	RLR05C4753FR	RESISTOR,FIXED,FILM.....	1
74	PADZZ	5905012025861	81349	RLR05C10R0GS	RESISTOR,FIXED,FILM.....	3
75	PADZZ	5905011700392	81349	RLR05C3012FS	RESISTOR,FIXED,FILM.....	1
76	PADZZ	5905010158085	81349	RLR05C1001FS	RESISTOR,FIXED,FILM.....	9
77	PADZZ	5905011769306	81349	RLR05C1601GS	RESISTOR,FIXED,FILM.....	2
78	PADZZ	5905011935107	81349	RLR05C15R0FS	RESISTOR,FIXED,FILM.....	1
79	PADZZ	5905011851311	81349	RLR05C4531FS	RESISTOR,FIXED,FILM.....	1
80	PADZZ	5905012613758	81349	RLR05C2551FS	RESISTOR,FIXED,FILM.....	1
81	PADZZ	5905011738932	81349	RLR05C4701GS	RESISTOR,FIXED,FILM.....	1
82	PADZZ	5905011851314	81349	RLR05C4992FS	RESISTOR,FIXED,FILM.....	2
83	XDDZZ	5905012047202	81349	RLR05C7R50FS	RESISTOR,FIXED,FILM.....	1
84	PADZZ	5905011847938	81349	RLR05C7501FS	RESISTOR,FIXED,FILM.....	3
85	PADZZ	5905011899078	81349	RLR05C1691FS	RESISTOR,FIXED,FILM.....	2
86	PADZZ	5905011687457	81349	RLR05C5111FS	RESISTOR,FIXED,FILM.....	2
87	PADZZ	5905011675098	81349	RLR05C6802GS	RESISTOR,FIXED,FILM.....	1
88	PADZZ	5905011757857	81349	RLR05C2201GS	RESISTOR,FIXED,FILM.....	2
89	PADZZ	5905011866677	81349	RLR05C4022FS	RESISTOR,FIXED,FILM.....	1
90	PADZZ	5905011763860	81349	RLR05C1912FS	RESISTOR,FIXED,FILM.....	1
91	PADZZ	5905011863803	81349	RLR05C9091FS	RESISTOR,FIXED,FILM.....	1
92	PADZZ	5905011763875	81349	RLR05C2200GS	RESISTOR,FIXED,FILM.....	1
93	PADZZ	5905011750707	81349	RLR05C4700GS	RESISTOR,FIXED,FILM.....	3
94	PADZZ	5905011042120	81349	RLR05C1501FS	RESISTOR,FIXED,FILM.....	1
95	PADZZ	5905012331871	81349	RLR05C6490FS	RESISTOR,FIXED,FILM.....	1

Table C-10. Power Supply CCA, P/N AY6706612-0 (Sheet 3 of 9)

SECTION II			TM9-1290-364-14&P			
(1) ITEM NO	(2) SMR CODE	(3) NSN	(4) CAGEC	(5) PART NUMBER	(6) DESCRIPTION AND USABLE ON CODES(UOC)	(7) QTY
96	PADZZ	5905011779467	81349	RLR05C3301GS	RESISTOR,FIXED,FILM.....	1
97	PADZZ	5905011690036	81349	RWR81SR100FS	RESISTOR,FIXED,WIRE.....	2
98	PADZZ	5905012394381	81349	RLR05C48R7FS	RESISTOR,FIXED,FILM.....	1
99	PADZZ	5905010971621	81349	RWR81S5R11FS	RESISTOR,FIXED,WIRE.....	1
100	PADZZ	5905011593767	81349	RWR81SR402FS	RESISTOR,FIXED,WIRE.....	2
101	PADZZ	5905011867774	81349	RLR05C2491FS	RESISTOR,FIXED,FILM.....	1
102	PADZZ	5905011700377	81349	RLR05C2742FS	RESISTOR,FIXED,FILM.....	1
103	PADZZ	5905011694097	81349	RLR05C5110FS	RESISTOR,FIXED,FILM.....	1
104	PADZZ	5905011709081	81349	RLR05C1742FS	RESISTOR,FIXED,FILM.....	1
105	PADZZ	5905011851429	81349	RLR05C24R3FS	RESISTOR,FIXED,FILM.....	2
106	PADZZ	5905011771911	81349	RLR05C1202GS	RESISTOR,FIXED,FILM.....	1
107	PADZZ	5905012037817	81349	RLR05C1652FS	RESISTOR,FIXED,FILM.....	1
108	PADZZ	5950014432157	S7040	TM6705332-0	TRANSFORMER,CURRENT.....	1
109	PADZZ	5950014432166	S7040	TM6705577-0	TRANSFORMER,CURRENT.....	3
110	PADZZ	5950014432151	S7040	TM6705333-0	TRANSFORMER,POWER.....	1
111	PADZZ	5950014432155	S7040	TM6705338-0	TRANSFORMER,POWER.....	1
112	PADZZ	5950014432152	S7040	TM6705337-0	TRANSFORMER,CURRENT.....	1
113	PADZZ	5950014432162	S7040	TM6705579-0	TRANSFORMER,CURRENT.....	2
114	PADZZ	5960014432158	S7040	TM6705331-0	TRANSFORMER.....	1
115	PADZZ	5840014426197	24355	OP221AZ/883B	AMPLIFIER,DUAL LOW.....	1
116	PADZZ	5962012897408	12969	UC1843J/883B	MICROCIRCUIT,LINEAR.....	2
117	PADZZ	5962011263888	30554	79-9882-3	MICROCIRCUIT,LINEAR.....	1
118	PADZZ	5962011824299	32293	ICM7556MJD/883B	MICROCIRCUIT,LINEAR.....	1
119	PADZZ	5962012879499	81349	M38510/10901BPA	MICROCIRCUIT,LINEAR.....	1
120	PADZZ	5962010661587	19203	9324286	MICROCIRCUIT,LINEAR.....	1
121	PADZZ	5962012623919	34333	JAN7815K	MICROCIRCUIT,LINEAR.....	1
122	PADZA	5962011364640	49956	952536-3	MICROCIRCUIT,LINEAR.....	1
123	XADZZ		S7040	MP6706616-0	HEATSINK.....	5
124	XADZZ		S7040	PC6706553-0	PRINTED WIRE BOARD.....	1
125	XADZZ		S7040	MP6706694-0	HEATSINK,MECHANISM.....	1
126	XADZZ		S7040	MP6706581-0	INSULATOR.....	5
127	PADZZ	5305000545648	96906	MS51957-14	SCREW,MACHINE.....	5
128	PADZZ	5305000545650	96906	MS51957-16	SCREW,MACHINE.....	3
129	PADZZ	5310007239676	80205	NAS620C4L	WASHER,FLAT.....	10
130	PADZZ	5310009826580	96906	MS27183-1	WASHER,FLAT.....	4
131	PADZZ	5320001176929	96906	MS20426AD2-4	RIVET,SOLID.....	4
132	PADZZ	5310008116419	56878	FN12A-40	NUT,SELF-LOCKING,EX.....	1
133	PADZZ	5970012231416	18565	60-11-4374-1674	INSULATOR,DISK.....	5
134	PADZZ	5999010153901	81349	M38527/01-030D	MOUNTING PAD,ELECTR.....	7
135	PADZZ	5310013326522	91833	3049	WASHER,SHOULDERED.....	1
136	PADZZ	6145001604775	81348	QQW343S22S1T	.WIRE,ELECTRICAL.....	1
137	PADZZ	5970008370647	81349	M22129-22-N	.INSULATION SLEEVING.....	1
139	PADZZ		M8134	9M24308/24-34	CONNECTOR,RECEPTACL.....	1

END OF FIGURE

NOTE

Above SM&R codes are for the U.S. Army.

Table C-10. Power Supply CCA, P/N AY6706612-0 (Sheet 4 of 9)

(1) ITEM NO.	(2) SM&R CODE	(3) CAGEC	(4) PART NUMBER	(5) DESCRIPTION AND USABLE ON CODES (UOC)	(6) QTY
				POWER SUPPLY CCA (P/N AY6706612-0)	
1	PADZZ	81349	M39014/22-1132	CAPACITOR, FIXED (C1-C3, C21, C22)	5
2	PADZZ	81349	M39014/02-1419	CAPACITOR, FIXED (C4-C8, C24-C32, C34, C35, C39-C42, C44, C49-C52, C54-C58, C72, C77, C78, C82-C86, C91, C92, C94, C95, C98, C100-C104, C108, C111, C113, C131-C161)	82
3	PADZZ	81349	M39014/22-1114	CAPACITOR, FIXED (C9, C11)	2
4	PADZZ	81349	M39014/01-1317	CAPACITOR (C12, C17, C18, C36, C69, C90, C125, C126)	8
5	PADZZ	81349	M39014/22-1047	CAPACITOR, FIXED (C13, C19, C20, C64, C66-C68, C70, C74, C75, C93, C99, C105, C106, C110, C112, C115-C118, C121-C124, C127-C130)	28
6	PADZZ	81349	M39014/22-1094	CAPACITOR, FIXED (C14-C16, C38, C47, C48, C59, C60, C65, C73, C79, C80, C87, C96, C97, C109, C119, C163, C165)	19
7	PADZZ	81349	M39006/22-0660	CAPACITOR, FIXED (C23, C61)	2
8	PADZZ	81349	M39006/22-0550	CAPACITOR, FIXED (C33, C43)	2
9	PADZZ	81349	M39014/22-0975	CAPACITOR, FIXED (C37)	2
10	PADZZ	81349	M39014/22-0791	CAPACITOR, FIXED (C166, C114)	2
11	PADZZ	81349	M39014/22-0680	CAPACITOR (C62)	1
12	PADZZ	81349	M39014/22-0850	CAPACITOR, FIXED (C71)	1
13	PADZZ	81349	M39006/22-0527	CAPACITOR, FIXED (C76)	1
14	PADZZ	81349	M39014/22-0794	CAPACITOR, FIXED (C81, C46)	2
15	PADZZ	81349	M39014/22-1070	CAPACITOR, FIXED (C88)	1
16	PADZZ	81349	M39014/22-1067	CAPACITOR, FIXED (C89)	1
17	PADZZ	81349	M39006/22-0571	CAPACITOR, FIXED (C107)	1
18	PADZZ	81349	M39014/22-0986	CAPACITOR, FIXED (C120)	1
19	PADZZ	81349	CCR05CG221GS	CAPACITOR, FIXED (C162)	1
20	PADZZ	81349	JANTX1N5969	DIODE (CR53)	1
21	PADZZ	81349	JANTX1N5552	DIODE (CR1, CR2)	2

Table C-10. Power Supply CCA, P/N AY6706612-0 (Sheet 5 of 9)

(1) ITEM NO.	(2) SM&R CODE	(3) CAGEC	(4) PART NUMBER	(5) DESCRIPTION AND USABLE ON CODES (UOC)	(6) QTY
22	PADZZ	81349	JANTX1N4148-1	SEMICONDUCTOR (CR3, CR6, CR9, CR10, CR17, CR18, CR20, CR22, CR28, CR31-CR33)	12
23	PADZZ	81349	JANTX1N5806	DIODE (CR4, CR5, CR16, CR21, CR19, CR23, CR24, CR29)	8
24	PADZZ	81349	JANTX1N5811	DIODE (CR13, CR34)	2
25	PADZZ	81349	JANTX1N6621	DIODE (CR14, CR15)	2
26	PADZZ	81349	JANTX1N5311	DIODE (CR26, CR27)	2
27	PADZZ	81349	JANTX1N4478	DIODE (CR36, CR39)	2
28	PADZZ	81349	JANTX1N6064A	DIODE (CR37)	1
29	PADZZ	81349	JANTX1N965B-1	SEMICONDUCTOR (CR38, CR40)	2
30	PADZZ	81349	JANTX1N4618	DIODE (CR41)	1
31	PADZZ	81349	JANTX1N4625	DIODE (CR42, CR49, CR56, CR57)	4
32	PADZZ	81349	JANTX1N966B-1	DIODE (CR43)	1
33	PADZZ	81349	JANTX1N4104	DIODE (CR44)	1
34	PADZZ	81349	JANTX1N4101	DIODE (CR45, CR48, CR50, CR51)	4
35	PADZZ	81349	JANTX1N4469	DIODE (CR46, CR59)	2
36	PADZZ	81349	JANTX1N971B	SEMICONDUCTOR (CR47)	1
37	PADZZ	64155	LM136AH2.5/883	MICROCIRCUIT (CR52)	1
38	PADZZ	81349	JANTX1N4964	DIODE (CR54, CR55)	2
39	PADZZ	81349	JANTX1N4988	DIODE (CR58)	1
40	PADZZ	81349	JANTX1N4969	DIODE (CR61)	1
41	PADZZ	94580	253002	CONNECTOR, BODY PLUG (F1)	1
42	XADZZ	S7040	TM6705334-0	INDUCTOR (L1, L6)	2
43	PADZZ	S7040	TM6705578-0	INDUCTOR (L4)	1
44	PADZZ	96906	MS75085-7	COIL, RADIO (L5, L9, L10)	3
45	PADZZ	S7040	TM6705335-0	CHOKE (L7)	1
46	PADZZ	S7040	TM6705336-0	INDUCTOR (L8, L11)	2
47	PADZZ	S7040	TM6706675-0	INDUCTOR (L12, L13)	2
48	PADZZ	96906	MS18130-7	INDUCTOR (L14)	1
49	PADZZ	81349	JANTX4N49	COUPLER (OC1, OC2)	2
50	PADZZ	81349	JANTX2N6784	TRANSISTOR (Q2)	1

Table C-10. Power Supply CCA, P/N AY6706612-0 (Sheet 6 of 9)

(1) ITEM NO.	(2) SM&R CODE	(3) CAGEC	(4) PART NUMBER	(5) DESCRIPTION AND USABLE ON CODES (UOC)	(6) QTY
51	PADZZ	81349	JANTX2N5416	TRANSISTOR (Q4).....	1
52	PADZZ	81349	JANTX2N2907A	TRANSISTOR (Q5).....	1
53	PADZZ	81349	JANTX2N6796	TRANSISTOR (Q6, Q7, Q12, Q16).....	4
54	PADZZ	81349	JANTX2N2222A	TRANSISTOR (Q8, Q10, Q11, Q13, Q19).....	5
55	PADZZ	81349	JANTX2N7224	TRANSISTOR (Q9).....	1
56	PADZZ	81349	JANTX2N3439	TRANSISTOR (Q14).....	1
57	PADZZ	81349	RWR81S1001FS	RESISTOR (R1, R2, R17, R42, R50, R51).....	6
58	PADZZ	81349	JANTX2N6849	TRANSISTOR (Q15).....	1
59	PADZZ	81349	RLR05C2002FS	RESISTOR (R3, R10, R12, R72)	4
60	PADZZ	81349	JANTX2N6798	TRANSISTOR (Q17).....	1
61	PADZZ	81349	RLR05C3320FS	RESISTOR (R4, R5).....	2
62	PADZZ	81349	RLR05C4751FS	RESISTOR (R6, R7, R15, R16, R32, R33, R35, R40, R96).....	8
63	PADZZ	81349	RLR05C6982FS	RESISTOR (R8).....	1
64	PADZZ	81349	RLR05C1002FS	RESISTOR (R9, R69, R77, R83, R85, R88, R102, R109, R112, R116)	10
65	PADZZ	81349	RLR05C2743FS	RESISTOR (R11, R29).....	2
66	PADZZ	81349	RLR05C1000FS	RESISTOR (R13, R14, R65, R90).....	4
67	PADZZ	81349	RLR05C47R0GS	RESISTOR (R18, R39, R79, R104).....	4
68	PADZZ	81349	RWR81S4R75FS	RESISTOR (R19).....	1
69	PADZZ	81349	RLR05C11R8FS	RESISTOR (R20).....	1
70	PADZZ	81349	RLR05C1004FR	RESISTOR (R21, R23, R101, R117).....	4
71	PADZZ	81349	RLR05C4752FS	RESISTOR (R22, R28).....	2
72	PADZZ	81349	RLR05C1003FS	RESISTOR (R24, R84).....	2
73	PADZZ	81349	RLR05C4753FR	RESISTOR (R25).....	1
74	PADZZ	81349	RLR05C10R0GS	RESISTOR (R27, R31, R45).....	4
75	PADZZ	81349	RLR05C3012FS	RESISTOR (R30).....	1
76	PADZZ	81349	RLR05C1001FS	RESISTOR (R34, R36, R46, R57, R76, R78, R95, R106, R110)	9
77	PADZZ	81349	RLR05C1601GS	RESISTOR (R38, R87).....	2
78	PADZZ	81349	RLR05C15R0FS	RESISTOR (R41).....	1

Table C-10. Power Supply CCA, P/N AY6706612-0 (Sheet 7 of 9)

(1) ITEM NO.	(2) SM&R CODE	(3) CAGEC	(4) PART NUMBER	(5) DESCRIPTION AND USABLE ON CODES (UOC)	(6) QTY
79	PADZZ	81349	RLR05C4531FS	RESISTOR (R43).....	1
80	PADZZ	81349	RLR05C2551FS	RESISTOR (R44).....	1
81	PADZZ	81349	RLR05C4701GS	RESISTOR (R54).....	1
82	PADZZ	81349	RLR05C4992FS	RESISTOR (R55, R74).....	2
83	PADZZ	81349	RLR05C7R50FS	RESISTOR (R56).....	1
84	PADZZ	81349	RLR05C7501FS	RESISTOR (R58, R60, R115).....	3
85	PADZZ	81349	RLR05C1691FS	RESISTOR (R59, R113).....	2
86	PADZZ	81349	RLR05C5111FS	RESISTOR (R61, R98).....	2
87	PADZZ	81349	RLR05C6802GS	RESISTOR (R62).....	1
88	PADZZ	81349	RLR05C2201GS	RESISTOR (R63, R107).....	2
89	PADZZ	81349	RLR05C4022FS	RESISTOR (R66).....	1
90	PADZZ	81349	RLR05C1912FS	RESISTOR (R67).....	1
91	PADZZ	81349	RLR05C9091FS	RESISTOR (R68).....	1
92	PADZZ	81349	RLR05C2200GS	RESISTOR (R70).....	1
93	PADZZ	81349	RLR05C4700GS	RESISTOR (R71, R80, R81).....	3
94	PADZZ	81349	RLR05C1501FS	RESISTOR (R73).....	1
95	PADZZ	81349	RLR05C6490FS	RESISTOR (R75).....	1
96	PADZZ	81349	RLR05C3301GS	RESISTOR (R82).....	1
97	PADZZ	81349	RWR81SR100FS	RESISTOR (R86, R111).....	2
98	PADZZ	81349	RLR05C48R7FS	RESISTOR (R89).....	1
99	PADZZ	81349	RWR81S5R11FS	RESISTOR (R91).....	1
100	PADZZ	81349	RWR81SR402FS	RESISTOR (R92, R99).....	2
101	PADZZ	81349	RLR05C2491FS	RESISTOR (R93).....	1
102	PADZZ	81349	RLR05C2742FS	RESISTOR (R94).....	1
103	PADZZ	81349	RLR05C5110FS	RESISTOR (R97).....	1
104	PADZZ	81349	RLR05C1742FS	RESISTOR (R100).....	1
105	PADZZ	81349	RLR05C24R3FS	RESISTOR (R103, R105).....	2
106	PADZZ	81349	RLR05C1202GS	RESISTOR (R108).....	1

Table C-10. Power Supply CCA, P/N AY6706612-0 (Sheet 8 of 9)

(1) ITEM NO.	(2) SM&R CODE	(3) CAGEC	(4) PART NUMBER	(5) DESCRIPTION AND USABLE ON CODES (UOC)	(6) QTY
107	PADZZ	81349	RLR05C1652FS	RESISTOR (R114).....	1
108	PADZZ	S7040	TM6705331-0	TRANFORMER (T1).....	1
109	PADZZ	S7040	TM6705577-0	TRANSFORMER (T2, T6, T10).....	3
110	PADZZ	S7040	TM6705333-0	MAIN CHOKE (T3).....	1
110a	PADZZ	S7040	TM67010751	MAIN CHOKE (T3).....	ALT
111	PADZZ	S7040	TM6705338-0	MAIN TRANSFORMER (T4).....	1
112	PADZZ	S7040	TM6705337-0	CURRENT TRANSFORMER (T5).....	1
113	PADZZ	S7040	TM6705579-0	TRANSFORMER (T7, T9).....	2
114	PADZZ	S7040	TM6705331-0	TRANSFORMER (T8).....	1
115	PADZZ	24355	OP221AZ/883B	DUAL OPERATING AMP (U1).....	1
116	PADZZ	12969	UC1843J/883B	CURRENT CONTROLLER (U2, U8).....	2
117	PADZZ	30554	79-9882-3	MICROCIRCUIT (U6).....	1
118	PADZZ	32293	ICM7556MJD/883B	MICROCIRCUIT, LINEAR (U7).....	1
119	PADZZ	81349	M38510/10901BPB	MICROCIRCUIT (U9).....	1
120	PADZZ	19203	9324286	MICROCIRCUIT (U10).....	1
121	PADZZ	81349	M38510/10708BYC	MICROCIRCUIT (U11).....	1
122	PADZZ	27014	LM120H15/883B	MICROCIRCUIT (U12).....	1
123	XADZZ	S7040	MP6706616-0	HEAT SINK.....	4
124	XADZZ	S7040	PC6706553-0	PRINTED WIRE BOARD.....	1
125	XADZZ	S7040	MP6706694-0	HEAT SINK,.....	1
126	XADZZ	S7040	MP6706581-0	INSULATOR.....	4
127	PADZZ	96906	MS51957-14	SCREW.....	5
128	PADZZ	96906	MS51957-16	SCREW.....	1
129	PAFZZ	80205	NAS620C4L	WASHER.....	9
130	PAFZZ	96906	MS27183-1	WASHER.....	4
131	PADZZ	96906	MS20426AD2-4	RIVET.....	4
132	PADZZ	96906	MS21042-04	NUT.....	2
133	PADZZ	18565	60-11-4374-1674	INSULATOR.....	5
134	PADZZ	81349	M38527/01-030D	MOUNTING PAD.....	7
135	PADZZ	91833	3049	WASHER, SHOULDERED.....	1

Table C-10. Power Supply CCA, P/N AY6706612-0 (Sheet 9 of 9)

(1) ITEM NO.	(2) SM&R CODE	(3) CAGEC	(4) PART NUMBER	(5) DESCRIPTION AND USABLE ON CODES (UOC)	(6) QTY
136	PADZZ	81348	QQW343S22S1T	WIRE, ELECTRICAL	AR
137	PADZZ	81349	M22129-22-N	INSULATION SLEEVING	AR
138	PADZZ	18565	60-11-4374-1674	INSULATOR.....	8
139	PADZZ	81349	M24308/24-34	CONNECTOR, P1	1
				END OF FIGURE	

NOTE

Above SM&R codes are for the U.S. Marine Corps.

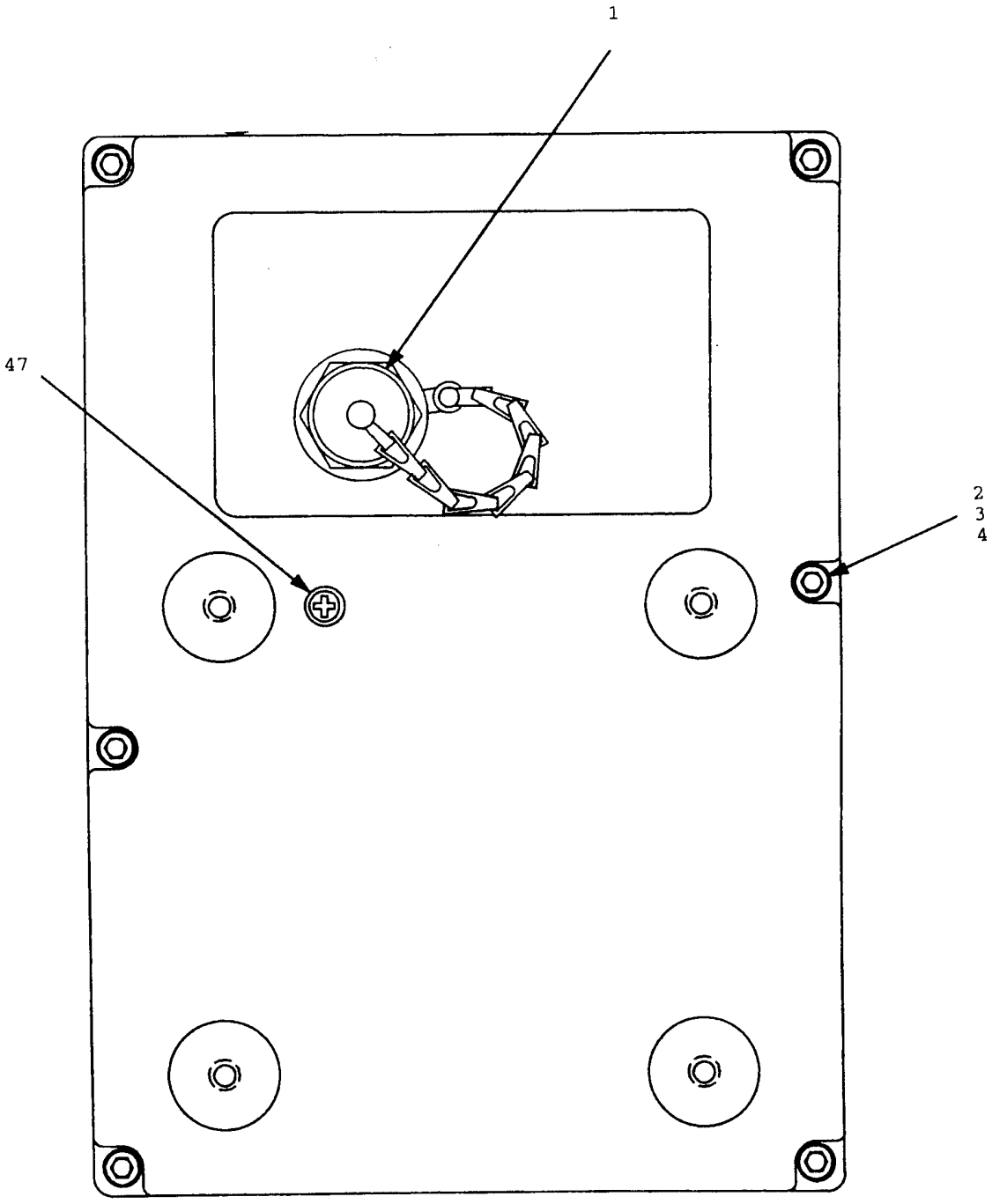

Figure C-11. Transceiver Assy, P/N AY6706571-2 (Sheet 1 of 3)

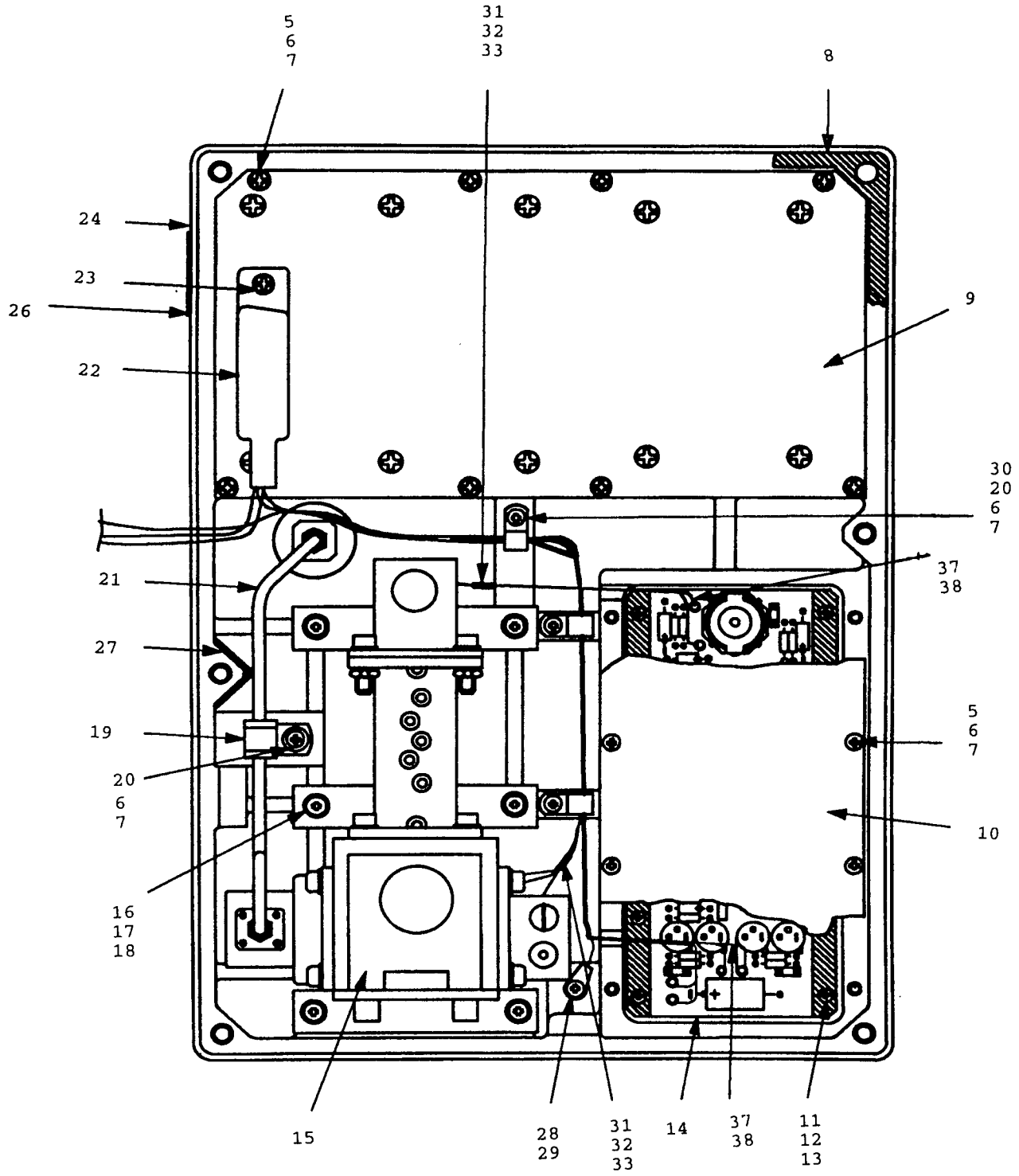

Figure C-11. Transceiver, P/N AY6706571-2 (Sheet 2 of 3)

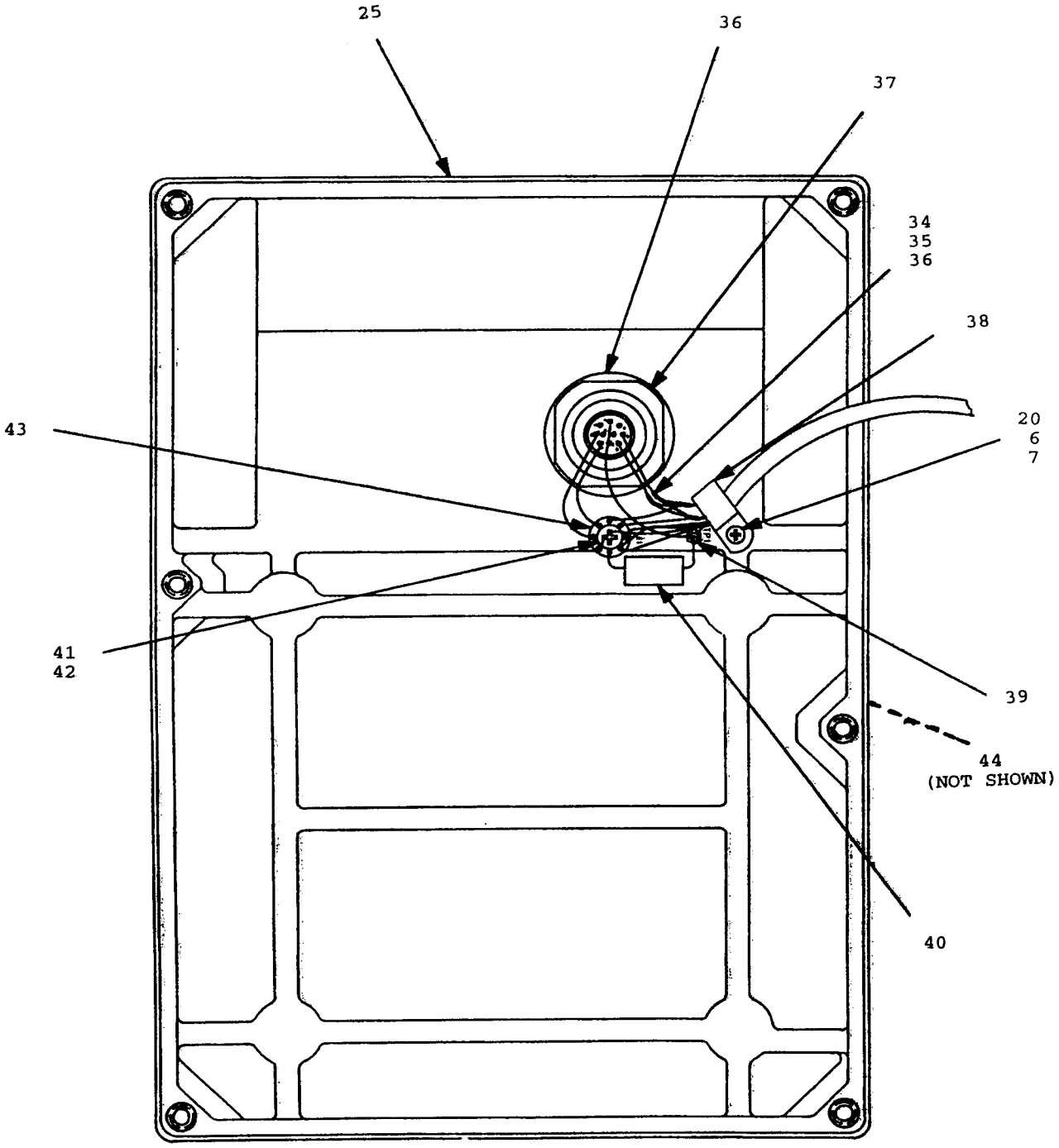

Figure C-11. Transceiver, P/N AY6706571-2 (Sheet 3 of 3)

Table C-11. Transceiver, P/N AY6706571-2 (Sheet 1 of 5)

SECTION II		TM9-1290-364-14&P				
(1)	(2)	(3)	(4)	(5)	(6)	(7)
ITEM NO	SMR CODE	NSN	CAGEC	PART NUMBER	DESCRIPTION AND USABLE ON CODES(UOC)	QTY
					GROUP 02 FIGURE C-11	
					TRANSCEIVER ASSY (P/N AY6706571-0)	
1	PADZZ	5935012798630	81349	D38999/33W13N	COVER,ELECTRICAL CO.....	1
2	PADZZ	5305014466635	S7040	MP6706562-0	SCREW,EXTERNALLY RE.....	6
3	PADZZ	5310009338120	96906	MS35338-138	WASHER,LOCK.....	6
4	PADZZ	5310007819483	80205	NAS620C10L	WASHER,FLAT.....	6
5	PADZZ	5305000545649	96906	MS51957-15	SCREW,MACHINE.....	17
6	PADZZ	5310009338118	96906	MS35338-135	WASHER,LOCK.....	21
7	PADZZ	5310000570573	80205	NAS620C4	WASHER,FLAT.....	16
8	PADZZ	5330014426611	S7040	MP6706570-0	GASKET ANTENNA.....	1
9	PADDD	6130014354413	S7040	AY6706620-0	POWER SUPPLY.....	1
10	XADZZ		S7040	MP6706569-0	COVER, DOPPLER.....	1
11	PADZZ	5305000545637	96906	MS51957-3	SCREW,MACHINE.....	12
12	PADZZ	5310009282690	96906	MS35338-134	WASHER,LOCK.....	12
13	PADZZ	5310000434708	80205	NAS620C2	WASHER,FLAT.....	12
14	PADDD	5998014353129	S7040	AY6706566-0	CIRCUIT CARD ASSEMB.....	1
15	PADDD	5840014464156	S7040	AY6706557-0	TRANSCEIVER,RADAR.....	1
16	PADZZ	5305000546670	96906	MS51957-45	SCREW,MACHINE.....	6
17	PADZZ	5310009338119	96906	MS35338-137	WASHER,LOCK.....	6
18	PADZZ	5310006853744	88041	AN960C8	WASHER,FLAT.....	6
19	PADZZ	5340011602304	96906	MS21919WCG2	CLAMP,LOOP.....	1
20	PADZZ	5305000545647	96906	MS51957-13	SCREW,MACHINE.....	4
21	XDDZZ		S7040	WA6706563-0	CABLE,SPECIAL PURPO.....	1
22	PADZA	5935004905220	81349	M24308/2-2	CONNECTOR,RECEPTACL.....	1
23	PADZZ	5935011793497	81349	M24308/25-9	RETAINER,ELECTRICAL.....	2
24	XADZZ		S7040	EA6706148-0	MICROSTRIP ANTENNA.....	1
25	XADDD		S7040	AM6706189-0	COVER,ANTENNA.....	1
26	XDDZZ		S7040	NP6706572-0	NAMEPLATE.....	1
27	PADZZ	5340014421982	S7040	MP6708090-0	BUMPER,NONMETALLIC.....	2
28	PADZZ	5305000545646	96906	MS51957-12	SCREW,MACHINE.....	1
29	PADZZ	5940006822477	96906	MS77068-1	TERMINAL,LUG.....	1
30	PADZZ	5340007828737	80205	NAS1397P4N	CLAMP,LOOP.....	4
31	PADZZ		81349	M22579/11-22-6	WIRE, ELECTRICAL BL.....	1
32	PADZA	6145009394955	81349	M22759/11-20-0	WIRE,ELECTRICAL.....	1
33	PAFZZ	5940011357077	81349	M83519/1-3	SPLICE,CONDUCTOR.....	4
34	PADZZ	6145009457467	81349	M22759/11-22-0	WIRE,ELECTRICAL.....	1
34	PADZZ	6145009457467	81349	M22759/11-22-0	WIRE,ELECTRICAL.....	1
35	PADZZ	5970000823942	81349	M23053/5-105-9	.INSULATION SLEEVING INSULATION SLEEVING.....	1
36	PADZZ	5310014451483	S7040	MP6706700-0	KNOB.....	1
37	PADZA	5935011475741	81349	D38999/24WC98PN	CONNECTOR,RECEPTACL.....	1
38	PAFZZ		97871	155-8587-001	CLAMP, LOOP.....	1
39	PADZZ	5940001441622	81349	SE186E01	TERMINAL,STUD.....	1

Table C-11. Transceiver, P/N AY6706571-2 (Sheet 2 of 5)

SECTION II TM9-1290-364-14&P

(1) ITEM NO	(2) SMR CODE	(3) NSN	(4) CAGEC	(5) PART NUMBER	(6) DESCRIPTION AND USABLE ON CODES(UOC)	(7) QTY
40	PADZZ	5910000990569	81349	M39014/05-2331	CAPACITOR,FIXED,CER.....	1
41	PADZZ	5305000546654	96906	MS51957-30	SCREW,MACHINE.....	1
42	PADZZ	5310009296395	96906	MS35338-136	WASHER,LOCK.....	1
43	PADZZ	5940009397825	81349	M55155/26XJ03	TERMINAL,STUD.....	1
44	PADZZ	5305008552989	97539	SEELSKREWR10-32X	SCREW,MACHINE.....	1

END OF FIGURE

NOTE

Above SM&R codes are for the U.S. Army.

Table C-11. Transceiver, P/N AY6706571-2 (Sheet 3 of 5)

(1) ITEM NO.	(2) SM&R CODE	(3) CAGEC	(4) PART NUMBER	(5) DESCRIPTION AND USABLE ON CODES (UOC)	(6) QTY
				TRANSCEIVER ASSY P/N AY6706571-0, Y6706571-2)	
1	PAOHD	S7040	AY6706571-0	TRANSCEIVER	1
2	PAOZZ	81349	D38999/33W13N	DUST CAP	1
3	PAFZZ	S7040	MP6706562-0	SCREW, CAPTIVE	6
4	PAFZZ	96906	MS35338-138	WASHER	6
5	PAFZZ	80205	NAS620C10L	WASHER	6
6	PAFZZ	96906	MS51957-15	SCREW	8
7	PAFZZ	96906	MS35338-135	WASHER	8
8	PAFZZ	80205	NAS620C4	WASHER	8
9	PAFZZ	S7040	MP6706570-0	GASKET	1
10	PAFHD	S7040	AY6706620-0	MODULE, POWER SUPPLY (SEE FIG. C-13 FOR BKDN)	1
11	PAFZZ	96906	MS51957-15	SCREW	8
12	PAFZZ	96906	MS35338-135	WASHER	8
13	PAFZZ	88044	NAS620C4	WASHER	8
14	XBFZZ	S7040	MP6706569-0	COVER	1
15	PAFZZ	96906	MS51957-3	SCREW	12
16	PAFZZ	96906	MS35338-134	WASHER	12
17	PAFZZ	80205	NAS620C2	WASHER	12
18	PAFHD	S7040	AY6706566-0	CCA, DOPPLER AMPLIFIER ...(SEE FIG. C-12 FOR BKDN)	1
19	PAFFZ	S7040	AY6706557-0	TRANSCEIVER	1
20	PAFZZ	96906	MS51957-45	SCREW	6
21	PAFZZ	96906	MS35338-137	WASHER	6
22	PAFZZ	88041	AN960C8	WASHER	6
23	PAFZZ	96906	MS21919WCG2	CLAMP	1
24	PAFZZ	96906	MS51957-13	SCREW	1
25	PAFZZ	96906	MS35338-135	WASHER	1
26	PAFZZ	88044	AN960C4	WASHER	1

Table C-11. Transceiver, P/N AY6706571-2 (Sheet 4 of 5)

(1) ITEM NO.	(2) SM&R CODE	(3) CAGEC	(4) PART NUMBER	(5) DESCRIPTION AND USABLE ON CODES (UOC)	(6) QTY
27	PAFZZ	S7040	WA6706563-0	CABLE, RF	1
28	PAFZZ	81349	M24308/2-2	CONNECTOR, P1	1
29	PAFZZ	81349	M24308/25-9	SCREW	2
30	PAFZZ	S7040	EA6706148-0	ANTENNA, MICROSTRIP	1
30a	PAFZZ	S7040	EA6706148-1	ANTENNA, MICROSTRIP	ALT
31	XBFFF	S7040	AM6706189-0	COVER, ANTENNA	1
31a	XBFFF	S7040	AM67010650-	COVER, ANTENNA	ALT
32	MDOZZ	S7040	NP6706572-0	NAME PLATE	1
33	MFFZZ	S7040	MP6708090-0	RUBBER	2
34	PAFZZ	96906	MS51957-12	SCREW	1
35	PAFZZ	96906	MS77068-1	TERMINAL	1
36	PAFZZ	80205	NAS1397R4DB	CLAMP	3
37	PAFZZ	96906	MS51957-13	SCREW	3
38	PAFZZ	96906	MS35338-135	WASHER	3
39	PAFZZ	88044	AN960C4	WASHER	3
40	MFFZZ	81349	M27500-22SB2T23	CABLE, SHIELD	AR
41	PAFZZ	81349	M16878/4-22-0	WIRE	AR
42	PAFZZ	81349	M83519/1-3	SPLICE, CONDUCTOR	4
43	PAFZZ	81349	M16878/4-22-0	WIRE	AR
44	PAFZZ	81349	M16878/4-22-9	WIRE	AR
45	PAFZZ	81349	M83519/1-3	SPLICE, CONDUCTOR	1
46	MFFZZ	81349	M27500-22SB2T23	CABLE, SHIELD	AR
47	PAFZZ	81349	M23053/5-105-9	SLEEVE	1
48	PAFZZ	S7040	MP6706700-0	NUT, GROMMET	1
49	PAFZZ	81349	D38999/24WC98PN	CONNECTOR, J1	1
50	PAFZZ	80205	NAS1397R4DB	CLAMP	1
51	PAFZZ	96906	MS51957-13	SCREW	1
52	PAFZZ	96906	MS35338-135	WASHER	1
53	PAFZZ	88044	AN960C4	WASHER	1

Table C-11. Transceiver, P/N AY6706571-2 (Sheet 5 of 5)

(1) ITEM NO.	(2) SM&R CODE	(3) CAGEC	(4) PART NUMBER	(5) DESCRIPTION AND USABLE ON CODES (UOC)	(6) QTY
54	PAFZZ	81349	SE186E01S	TERMINAL	1
55	PAFZZ	81349	M39014/05-2331	CAPACITOR	1
56	PAFZZ	96906	MS51957-30	SCREW	1
57	PAFZZ	96906	MS35338-136	WASHER.....	1
58	PAFZZ	81349	SE26XF03S	TERMINAL	1
59	PAFZZ	96906	MS3212-31	SCREW	1
60	PAFZZ	06090	234,A021-3	BOOT, RIGHT ANGLE	1
				END OF FIGURE	

NOTE

Above SM&R codes are for the U.S. Marine Corps.

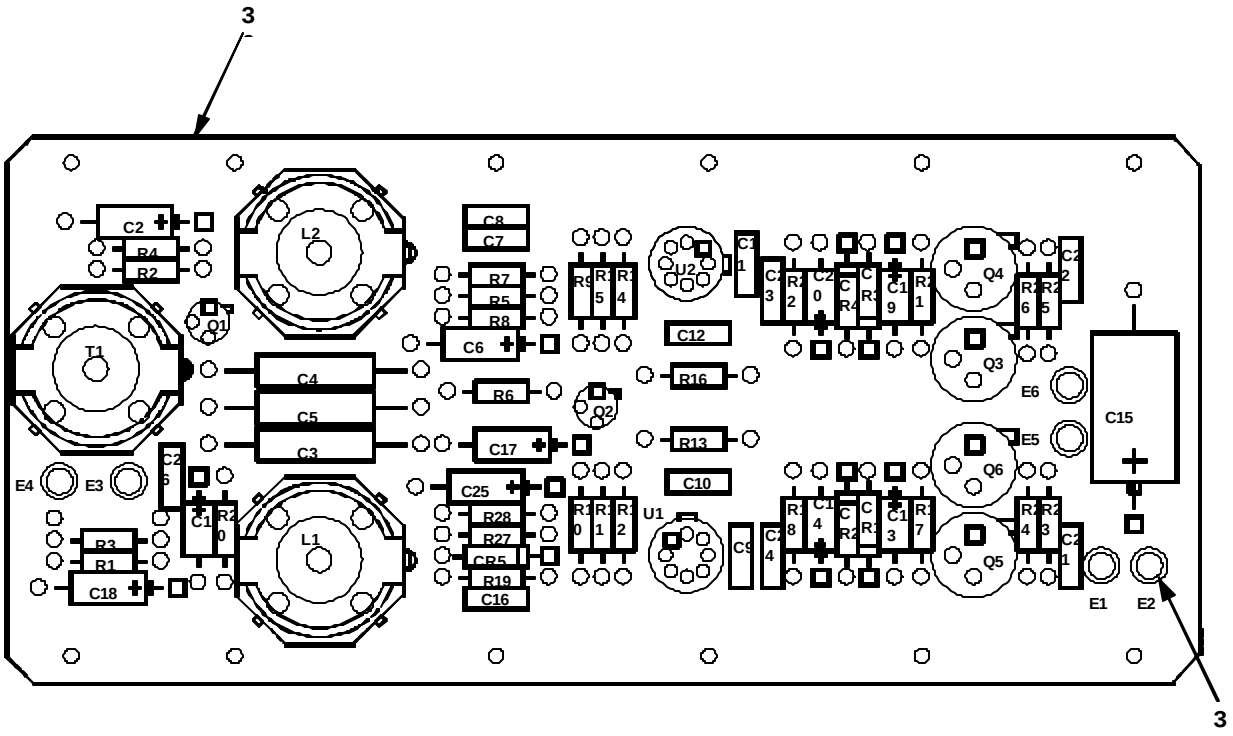

Figure C-12. Doppler Amplifier CCA, P/N AY6706566-0 (Sheet 1 of 2)

LEGEND

REF DES	ITEM NO.	REF DES	ITEM NO.	REF DES	ITEM NO.
C1	1	C24	9	R8	29
C2	5	C25	5	R9	30
C3	8	C26	7	R10	18
C4	34	CR1	12	R11	19
C5	8	CR2	12	R12	18
C6	5	CR3	12	R13	19
C7	9	CR4	12	R14	18
C8	10	CR5	13	R15	18
C9	11	L1	14	R16	19
C10	2	L2	14	R17	27
C11	11	Q1	15	R18	27
C12	2	Q2	15	R19	20
C13	1	Q3	16	R20	22
C14	1	Q4	17	R21	27
C15	3	Q5	16	R22	27
C16	4	Q6	17	R23	23
C17	5	R1	33	R24	23
C18	5	R2	21	R25	23
C19	1	R3	26	R26	23
C20	1	R4	21	R27	24
C21	6	R5	33	R28	25
C22	6	R6	27	T1	31
C23	9	R7	28		

Figure C-12. Doppler Amplifier CCA, P/N AY 6706566-0 (Sheet 2 of 2)

Table C-12. Doppler Amplifier CCA, P/N AY 6706566-0 (Sheet 1 of 3)

SECTION III TM9-1290-364-14&P

(1) ITEM NO	(2) SMR CODE	(3) NSN	(4) CAGEC	(5) PART NUMBER	(6) DESCRIPTION AND USABLE ON CODES(UOC)	(7) QTY
					GROUP 0201 FIGURE C-12	
					DOPPLER AMPLIFIER CCA (P/N AY6706566-0)	
1	PADZZ	5910004950042	81349	M39003-01-3076	CAPACITOR,FIXED,ELE.....	5
2	PADZZ	5910012380381	81349	CCR05CJ4R7BS	CAPACITOR,FIXED,CER.....	2
3	PADZZ	5910012330730	81349	M39003/01-8121	CAPACITOR,FIXED,ELE.....	1
4	PADZZ	5910000108666	81349	M39014/01-1357	CAPACITOR,FIXED,CER.....	1
5	PADZZ	5910012393994	81349	M39003/01-8078	CAPACITOR,FIXED,ELE.....	5
6	PADZZ	5910000108721	81349	M39014/02-1419	.CAPACITOR,FIXED,CER.....	2
7	PADZZ	5910001135465	81349	M39014/02-1360	CAPACITOR,FIXED,CER.....	1
8	PADZZ	5910012178875	81349	M83421/01-4051S	CAPACITOR,FIXED,MET.....	2
9	PADZZ	5910001135286	81349	M39014/02-1356	CAPACITOR,FIXED,CER.....	3
10	PADZZ	5910012154597	81349	CCR05CG101FS	CAPACITOR,FIXED,CER.....	1
11	PADZZ	5910003059515	81349	M39014/01-1583	CAPACITOR,FIXED,CER.....	2
12	PADZZ	5961005844527	81349	JANTX1N4148-1	SEMICONDUCTOR DEVIC.....	4
13	PADZZ	5961011050608	81349	JANTX1N965B-1	SEMICONDUCTOR DEVIC.....	1
14	XADZZ		S7040	TM6706568-0	INDUCTOR, DOPPLER.....	2
15	PADZZ	5961000225669	81349	JANTX2N930	TRANSISTOR.....	2
16	PADZZ	5961011793470	81349	JANTX2N2219AL	TRANSISTOR.....	2
17	PADZZ	5961011878836	81349	JANTX2N2905AL	TRANSISTOR.....	2
18	PADZZ	5905011466671	81349	RLR07C1502GS	RESISTOR,FIXED,FILM.....	4
19	PADZZ	5905011395316	81349	RLR07C2203GS	RESISTOR,FIXED,FILM.....	3
20	PADZZ	5905011370108	81349	RLR07C2700GS	RESISTOR,FIXED,FILM.....	1
21	PADZZ	5905011466672	81349	RLR07C1202GS	RESISTOR,FIXED,FILM.....	2
22	PADZZ	5905011386261	81349	RLR07C3301GS	RESISTOR,FIXED,FILM.....	1
23	PADZZ	5905011694098	81349	RLR07C15R0GS	RESISTOR,FIXED,FILM.....	4
24	PADZZ	5905011659845	81349	RLR07C6801GS	RESISTOR,FIXED,FILM.....	1
25	PADZZ	5905011395314	81349	RLR07C1002GS	RESISTOR,FIXED,FILM.....	1
26	PADZZ	5905011620731	81349	RLR07C2702GS	RESISTOR,FIXED,FILM.....	1
27	PADZZ	5905011491143	81349	RLR07C5601GS	RESISTOR,FIXED,FILM.....	5
28	PADZZ	5905011466673	81349	RLR07C1802GS	RESISTOR,FIXED,FILM.....	1
29	PADZZ	5905011486092	81349	RLR07C1501GS	RESISTOR,FIXED,FILM.....	1
30	PADZZ	5905011370109	81349	RLR07C4702GS	RESISTOR,FIXED,FILM.....	1
31	XADZZ		S7040	TM6706567-0	TRANSFORMER.....	1
32	PADZZ	5962012879492	81349	M38510/10107BGA	MICROCIRCUIT,LINEAR.....	2
33	PADZZ	5905011464349	81349	RLR07C8202GS	RESISTOR,FIXED,FILM.....	2
34	PADZZ	5910012657630	81349	M83421/01-4039S	CAPACITOR,FIXED,MET.....	1
35	XADZZ		81349	SE11XC01S	TERMINAL,STUD.....	6
36	XADZZ		S7040	PC6706565-0	PRINTED WIRE BOARD.....	1

END OF FIGURE

NOTE

Above SM&R codes are for the U.S. Army.

Table C-12. Doppler Amplifier CCA, P/N AY 6706566-0 (Sheet 2 of 3)

(1) ITEM NO.	(2) SM&R CODE	(3) CAGEC	(4) PART NUMBER	(5) DESCRIPTION AND USABLE ON CODES (UOC)	(6) QTY
				DOPPLER AMPLIFIER CCA (P/N AY6706566-0)	
1	PAFZZ	81349	M39003/01-2836	CAPACITOR, FIXED (C1, C13, C14, C19, C20)	5
2	PAFZZ	81349	CCR05CJ4R7BR	CAPACITOR, FIXED (C10, C12)	2
3	PAFZZ	81349	M39003/01-8121	CAPACITOR, FIXED (C15)	1
4	PAFZZ	81349	M39014-01-1317	CAPACITOR (C16)	1
5	PAFZZ	81349	M39003/01-3006	CAPACITOR, FIXED (C2, C6, C17, C18, C25)	5
6	PAFZZ	81349	M39014/02-1419	CAPACITOR, FIXED (C21, C22)	2
7	PAFZZ	81349	M39014/02-1360	CAPACITOR, FIXED (C26)	1
8	PAFZZ	81349	M83421/01-4051S	CAPACITOR, FIXED (C3, C5)	2
9	PAFZZ	81349	M39014/02-1316	CAPACITOR, FIXED (C7, C23, C24)	3
10	PAFZZ	81349	CCR05CG101FS	CAPACITOR, FIXED (C8)	1
11	PAFZZ	81349	M39014/01-1543	CAPACITOR, FIXED (C9, C11)	2
12	PAFZZ	81349	JANTX1N4148-1	SEMICONDUCTOR (CR1-CR4)	4
13	PAFZZ	81349	JANTX1N965B-1	SEMICONDUCTOR (CR5)	1
14	PAFZZ	S7040	TM6706568-0	INDUCTOR, DOPPLER (L1, L2)	2
15	PAFZZ	81349	JANTX2N930	TRANSISTOR (Q1, Q2)	2
16	PAFZZ	81349	JANTX2N2219A	TRANSISTOR (Q3, Q5)	2
17	PAFZZ	81349	JANTX2N2905A	TRANSISTOR (Q4, Q6)	2
18	PAFZZ	81349	RLR07C1502GR	RESISTOR(R10, R12, R14, R15)	4
19	PAFZZ	81349	RLR07C2203GS	RESISTOR (R11, R13. R16)	3
20	PAFZZ	81349	RLR07C2700GS	RESISTOR (R19)	1
21	PAFZZ	81349	RLR07C1202GS	RESISTOR (R2, R4)	2
22	PAFZZ	81349	RLR07C332GR	RESISTOR (R20)	1
23	PAFZZ	81349	RLR07C15R0GS	RESISTOR (R23, R26)	2
24	PAFZZ	81349	RLR07C6801GS	RESISTOR (R27)	1
25	PAFZZ	81349	RLR07C1002GS	RESISTOR (R28)	1
26	PAFZZ	81349	RLR07C2702GS	RESISTOR (R3)	1
27	PAFZZ	81349	RLR07C5601GS	RESISTOR (R6, R17, R18, R21, R22)	5
28	PAFZZ	81349	RLR07C1802GS	RESISTOR (R7)	1

Table C-12. Doppler Amplifier CCA, P/N AY 6706566-0 (Sheet 3 of 3)

(1) ITEM NO.	(2) SM&R CODE	(3) CAGEC	(4) PART NUMBER	(5) DESCRIPTION AND USABLE ON CODES (UOC)	(6) QTY
29	PAFZZ	81349	RLR07C1501GR	RESISTOR (R8).....	1
30	PAFZZ	81349	RLR07C4702GS	RESISTOR (R9).....	1
31	PAFZZ	S7040	TM6706567-0	TRANSFORMER (T1).....	1
32	PADZZ	27014	LM118H/883B	MICROCIRCUIT (U1, U2).....	2
33	PAFZZ	81349	RLR07C8202GS	RESISTOR.....	2
34	PAFZZ	81349	M83421/01/4051	CAPACITOR, FIXED	1
35	PAFZZ	81349	SE11XC01S	TERMINAL, STUD (E1-E6)	6
36	XAFZZ	S7040	PC6706565-0	PRINTED WIRE BOARD.....	1
				END OF FIGURE	

NOTE

Above SM&R codes are for the U.S. Marine Corps.

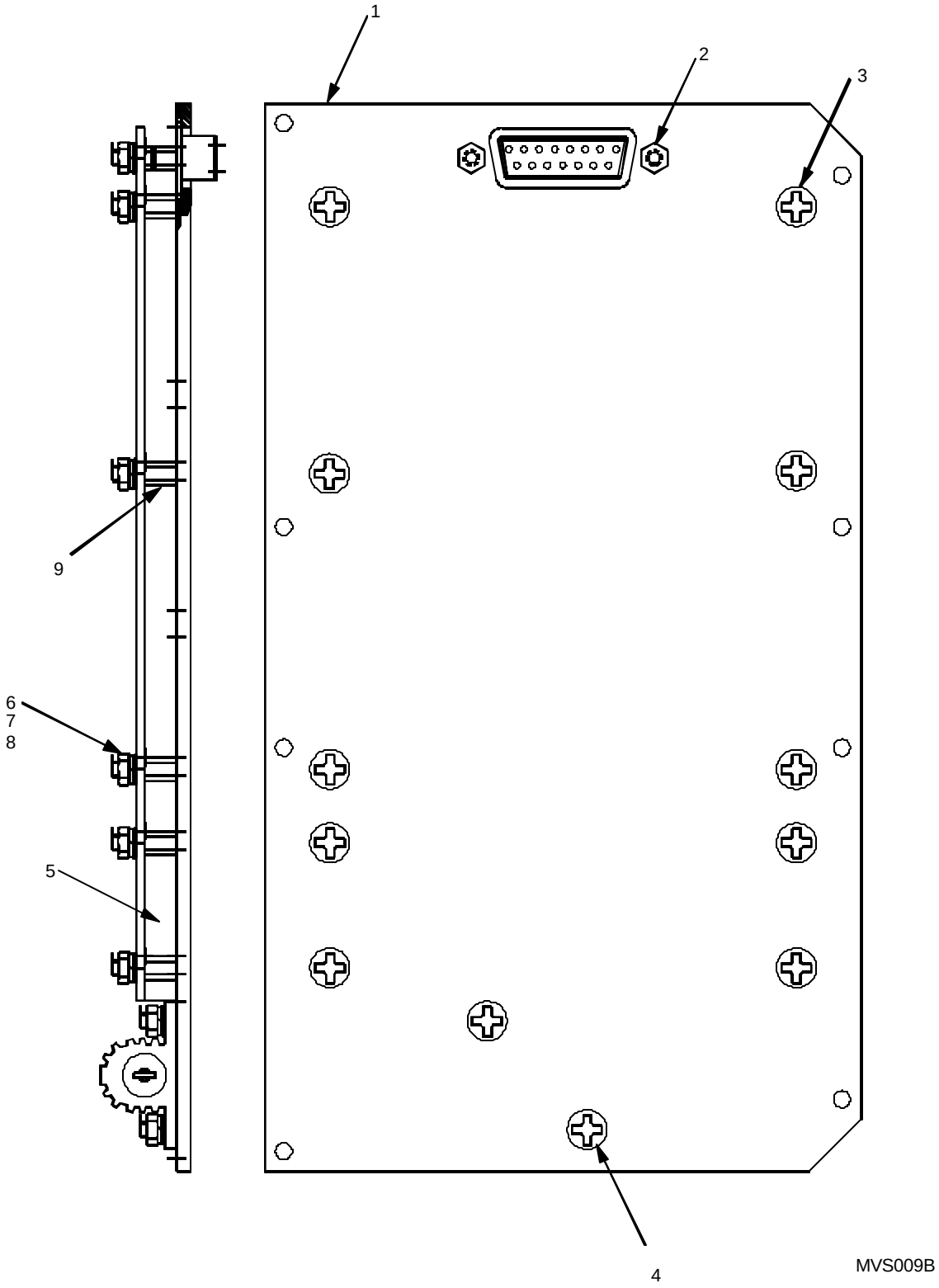

Figure C-13. Power Supply Module, P/N AY6706620-0 (Sheet 1 of 2)

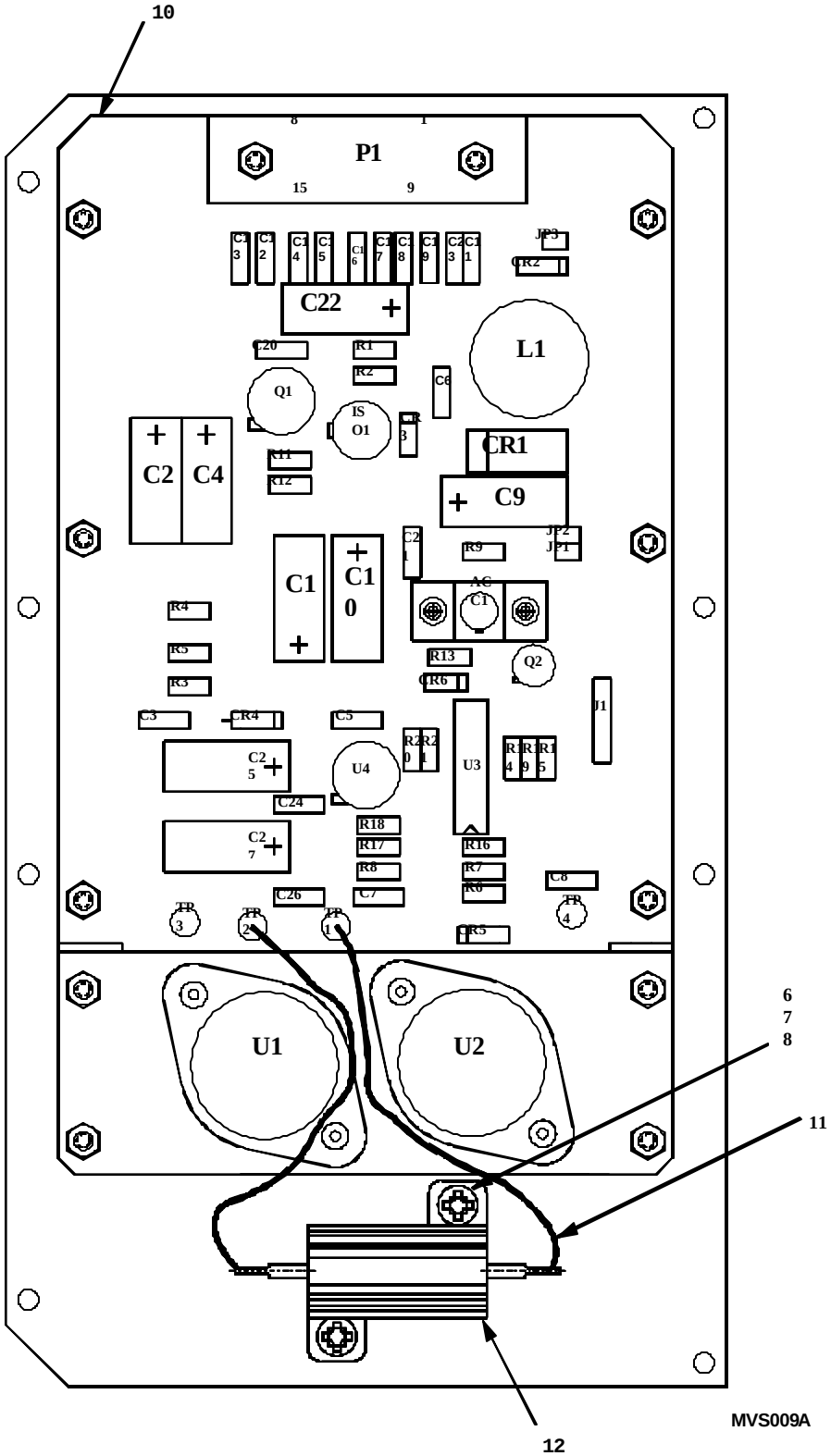
10
P1
8
1
15
9
C13
C12
C14
C15
C16
C17
C18
C19
C23
C11
JP3
CR2
C22
L1
C20
R1
R2
C6
Q1
IS
O1
CR
3
C2
C4
R11
R12
CR1
C9
C21
R9
JP2
JP1
C1
C10
AC
C1
R4
R5
R3
R13
Q2
CR6
J1
C3
CR4
C5
C25
U4
R20
R21
U3
R14
R19
R15
C24
R18
R17
R8
C26
C27
R16
R7
R6
C7
C8
TP
3
TP
2
TP
1
TP
4
R5
U1
U2
6
7
8
11
12
MVS009A

Table C-13. Power Supply Module, P/N AY6706620-0 (Sheet 1 of 2)

SECTION II		TM9-1290-364-14&P			
(1) ITEM NO	(2) SMR CODE	(3) NSN	(4) CAGEC	(5) PART NUMBER	(6) DESCRIPTION AND USABLE ON CODES(UOC)	(7) QTY
					GROUP 0202 FIGURE C-13	
					POWER SUPPLY MODULE (P/N AY6706620-0)	
1	XADZZ		S7040	MP6706560-0	COVER,POWER SUPPLY.....	1
2	PADZZ	5365014435130	S7040	MP6706607-0	SPACER,SLEEVE.....	2
3	PADZZ	5305007808454	96906	MS24693-C7	SCREW,MACHINE.....	10
4	PADZZ	5305000569961	96906	MS24693-C4	SCREW,MACHINE.....	2
5	PADZZ	5365014428661	S7040	AM6707842-0	SPACER,SPECIAL STRA.....	2
6	PADZZ	5310007239676	80205	NAS620C4L	WASHER,FLAT.....	12
7	PADZZ	5310009338118	96906	MS35338-135	WASHER,LOCK.....	12
8	PADZZ	5310002083786	80205	NAS671C4	NUT,PLAIN,HEXAGON.....	12
9	PADZZ	5365014428174	S7040	MP6706605-0	SPACER,SLEEVE.....	6
10	PADDD	5998014353131	S7040	AY6706619-0	CIRCUIT CARD ASSEMB.....	1
11	PADZZ	6145001440231	81349	M81044/12-22-9	.WIRE,ELECTRICAL.....	1
12	XDDZZ	5905001216993	81349	RER50F6R19R	RESISTOR,FIXED,WIRE.....	1

END OF FIGURE

NOTE

Above SM&R codes are for the U.S. Army.

Table C-13. Power Supply Module, P/N AY6706620-0 (Sheet 2 of 2)

(1) ITEM NO.	(2) SM&R CODE	(3) CAGEC	(4) PART NUMBER	(5) DESCRIPTION AND USABLE ON CODES (UOC)	(6) QTY
			AY6706620-0	POWER SUPPLY MODULE (P/N AY6706620-0)	
1	XBFZZ	S7040	MP6706560-0	COVER	1
2	PAFZZ	S7040	MP6706607-0	SPACER	2
3	PAFZZ	96906	MS24693-C7	SCREW	10
4	PAFZZ	96906	MS24693-C4	SCREW	2
5	PAFFF	S7040	AM6707842-0	SPACER	2
6	PAFZZ	80205	NAS620C4L	WASHER	12
7	PAFZZ	96906	MS35338-135	WASHER	12
8	PAFZZ	80205	NAS671C4	NUT	12
9	PAFZZ	S7040	MP6706605-0	SPACER	6
10	PAFHD	S7040	AY6706619-0	CCA, POWER SUPPLY (SEE FIG. C-14 FOR BKDN)	1
11	PADZZ	81349	M81044/12-22-9	WIRE	A/R
12	PADZZ	81349	RER50F6R19R	RESISTOR	1
				END OF FIGURE	

NOTE

Above SM&R codes are for the U.S. Marine Corps.

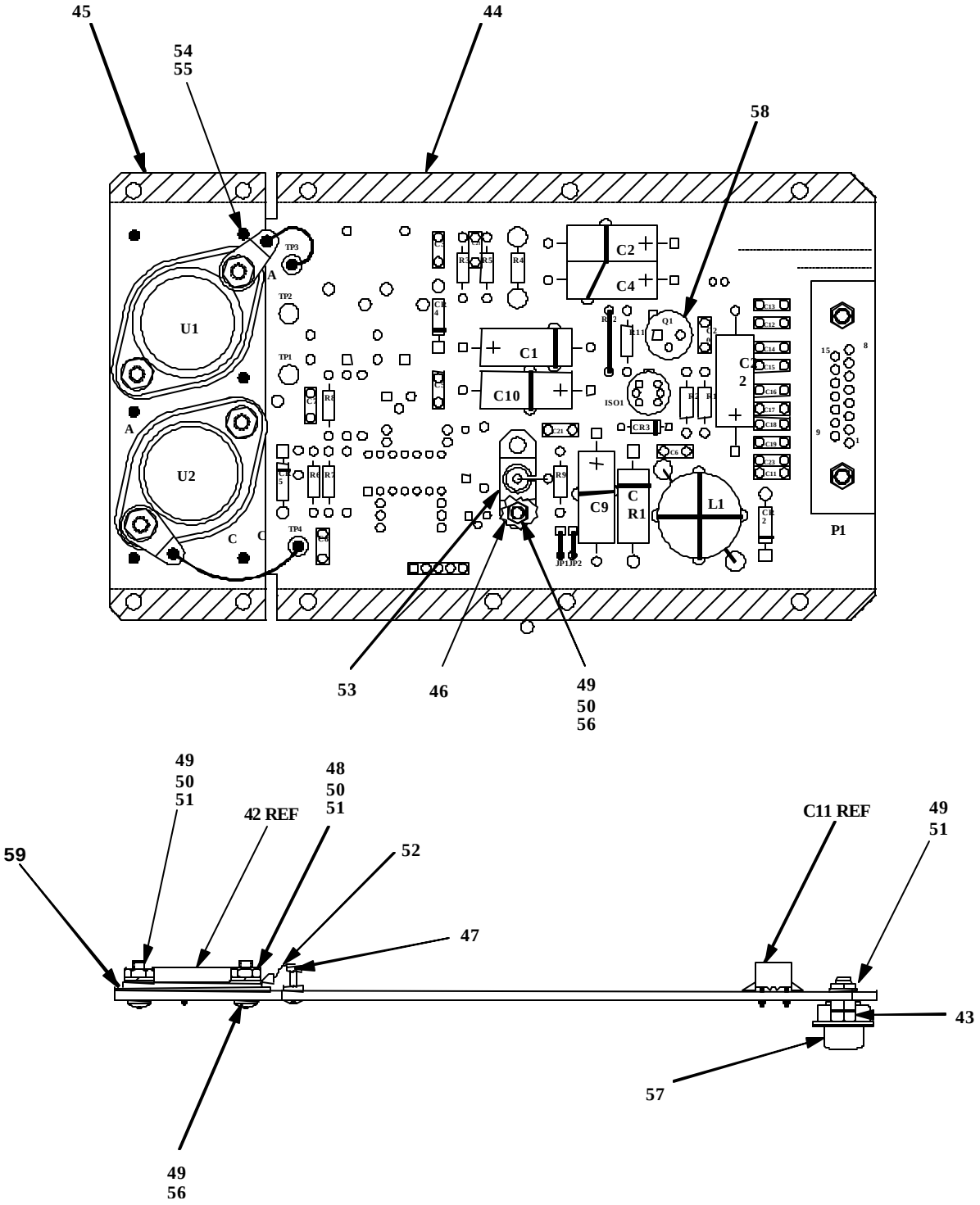

Figure C-14. Power Supply CCA, P/N AY6706619-0 (Sheet 1 of 2)

LEGEND

REF DES	ITEM NO.	REF DES	ITEM NO.	REF DES	ITEM NO.
C1	1	C28	2	R4	26
C2	3	CR1	6	R4	27
C3	6	CR2	7	R4	28
C4	3	CR3	8	R4	29
C5	6	CR4	9	R4	30
C6	6	CR5	10	R4	31
C7	6	ISO1	10	R4	32
C8	6	L1	11	R4	33
C9	1	Q1	12	R4	34
C10	1	R1	13	R4	35
C11	2	R2	14	R4	36
C12	2	R3	14	R4	37
C13	2	R4	16	R4	38
C14	2	R4	17	R5	39
C15	2	R4	18	R6	16
C16	2	R4	19	R7	39
C17	2	R4	20	R8	40
C18	2	R4	21	R9	41
C19	2	R4	22	R11	15
C20	4	R4	23	U1	42
C21	4	R4	24	U2	42
C22	5	R4	25		

Figure C-14. Power Supply CCA, P/N AY6706619-0 (Sheet 2 of 2)

Table C-14. Power Supply CCA, P/N AY6706619-0 (Sheet 1 of 4)

SECTION II		TM9-1290-364-14&P				
(1)	(2)	(3)	(4)	(5)	(6)	(7)
ITEM NO	SMR CODE	NSN	CAGEC	PART NUMBER	DESCRIPTION AND USABLE ON CODES(UOC)	QTY
					GROUP 020201 FIGURE C-14	
					POWER SUPPLY CCA (P/N AY6706619-0)	
1	PADZZ	5910012326460	81349	M39003/01-8234	CAPACITOR,FIXED,ELE.....	3
2	PADZZ	5910000108718	81349	M39014/02-1338	CAPACITOR,FIXED,CER.....	10
3	PADZZ	5910012554968	81349	M39003/01-8103	CAPACITOR,FIXED,ELE.....	2
4	PADZZ	5910000108721	81349	M39014/02-1419	CAPACITOR,FIXED,CER.....	2
5	PADZZ	5910011194337	81349	M39006/22-0612	CAPACITOR,FIXED,ELE.....	1
6	PADZZ	5910001135499	81349	M39014/02-1350	CAPACITOR,FIXED,CER.....	6
7	PADZZ	5961001724970	81349	JANTX1N5555	SEMICONDUCTOR DEVIC.....	1
8	PADZZ	5961010233449	81349	JANTXV1N5416	SEMICONDUCTOR DEVIC.....	1
9	PADZZ	5961005844527	81349	JANTX1N4148-1	SEMICONDUCTOR DEVIC.....	1
10	PADZZ	5961004269613	81349	JANTX1N5615	SEMICONDUCTOR DEVIC.....	2
11	PADZZ	5980010872886	81349	JANTX4N24A	COUPLER,OPTOELECTRO.....	1
12	PADZZ	5950014432154	S7040	TM6706621-0	REACTOR.....	1
13	PADZZ	5961012573586	81349	JANTX2N6849	TRANSISTOR.....	1
14	PADZZ	5905011370094	81349	RLR07C6800GS	RESISTOR,FIXED,FILM.....	2
15	PADZZ	5905002920981	81349	RNC55J2552FS	RESISTOR,FIXED,FILM.....	1
16	PADZZ	5905002031478	81349	RNC55H2430FS	RESISTOR,FIXED,FILM.....	2
17	PADZZ	5905004764668	81349	RNC55J9760FS	RESISTOR,FIXED,FILM.....	1
18	PADZZ	5905001641726	81349	RNC55J1001FS	RESISTOR,FIXED,FILM.....	1
19	PADZZ	5905002851997	81349	RNC55J1021FS	RESISTOR,FIXED,FILM.....	1
20	XDDZZ		81349	RNC55J1051FS	RESISTOR,FIXED,FILM.....	1
21	PADZZ	5905002083953	81349	RNC55J1071FS	RESISTOR,FIXED,FILM.....	1
22	PADZZ	5905003055252	81349	RNC55J1101FS	RESISTOR,FIXED,FILM.....	1
23	PADZZ	5905007583112	81349	RNC55J6190FS	RESISTOR,FIXED,FILM.....	1
24	PADZA	5905004320376	81349	RNC55J6340FS	RESISTOR,FIXED,FILM.....	1
25	PADZZ	5905003056126	81349	RNC55J6490FS	RESISTOR,FIXED,FILM.....	1
26	PADZZ	5905004764679	81349	RNC55J6650FS	RESISTOR,FIXED,FILM.....	1
27	PADZZ	5905004764680	81349	RNC55J6810FS	RESISTOR,FIXED,FILM.....	1
28	PADZZ	5905004764681	81349	RNC55J6980FS	RESISTOR,FIXED,FILM.....	1
29	PADZZ	5905004764682	81349	RNC55J7150FS	RESISTOR,FIXED,FILM.....	1
30	PADZZ	5905004764683	81349	RNC55J7320FS	RESISTOR,FIXED,FILM.....	1
31	PADZZ	5905004764684	81349	RNC55J7500FS	RESISTOR,FIXED,FILM.....	1
32	PADZZ	5905004764685	81349	RNC55J7680FS	RESISTOR,FIXED,FILM.....	1
33	PADZZ	5905004764686	81349	RNC55J7870FS	RESISTOR,FIXED,FILM.....	1
34	PADZZ	5905004764687	81349	RNC55J8060FS	RESISTOR,FIXED,FILM.....	1
35	PADZZ	5905004764689	81349	RNC55J8450FS	RESISTOR,FIXED,FILM.....	1
36	PADZZ	5905004764691	81349	RNC55J9090FS	RESISTOR,FIXED,FILM.....	1
37	PADZZ	5905004764695	81349	RNC55J9310FS	RESISTOR,FIXED,FILM.....	1
38	PADZZ	5905004764696	81349	RNC55J9530FS	RESISTOR,FIXED,FILM.....	1
39	PADZZ	5905001383376	81349	RNC55H1001FS	RESISTOR,FIXED,FILM.....	2
40	PADZZ	5905002702753	81349	RNC55J2261FS	RESISTOR,FIXED,FILM.....	1
41	PADZZ	5905011491143	81349	RLR07C5601GS	RESISTOR,FIXED,FILM.....	1
42	XDDZA		81349	M38510/11704BYC	MICROCIRCUIT,LINEAR.....	2
43	PADZZ	5365014435024	S7040	MP6706606-0	SPACER,SLEEVE.....	2
44	XADZZ		S7040	PC6706618-0	PRINTED WIRE BOARD.....	1
45	XADZZ		S7040	MP6706604-0	HEATSINK.....	1

Table C-14. Power Supply CCA, P/N AY6706619-0 (Sheet 2 of 4)

SECTION II TM9-1290-364-14&P

(1) ITEM NO	(2) SMR CODE	(3) NSN	(4) CAGEC	(5) PART NUMBER	(6) DESCRIPTION AND USABLE ON CODES(UOC)	(7) QTY
46	PADZZ	5935014465272	S7040	MP6707844-0	RETAINER,ELECTRICAL.....	1
47	PADZZ	5940012216415	81349	SE11XC01S	TERMINAL,STUD.....	8
48	PADZZ	5940001139828	96906	MS25036-148	TERMINAL,LUG.....	2
49	PADZZ	5310007239676	80205	NAS620C4L	WASHER,FLAT.....	10
50	PADZZ	5310009338118	96906	MS35338-135	WASHER,LOCK.....	6
51	PADZZ	5310002083786	80205	NAS671C4	NUT,PLAIN,HEXAGON.....	6
52	PADZA	6145009586007	81349	M22759/11-26-9	.WIRE,ELECTRICAL.....	1
53	PADZZ	5930014444571	S7040	WT6707886-0	SWITCH,ELECTRONIC.....	1
54	PADZZ	5310009826580	96906	MS27183-1	WASHER,FLAT.....	6
55	PADZZ	5320002438356	80205	MS20470AD2-4	RIVET,SOLID.....	6
56	PADZZ	5305000545649	96906	MS51957-15	SCREW,MACHINE.....	2
57	PADZA	5935010723903	81349	M24308/24-8	CONNECTOR,RECEPTACL.....	1
58	PADZZ	5999010153901	81349	M38527/01-030D	MOUNTING PAD,ELECTR.....	2
59	PADZZ	5970010770530	18565	60-11-4305-1674	INSULATOR,PLATE.....	2

END OF FIGURE

NOTE

Above SM&R codes are for the U.S. ARMY.

Table C-14. Power Supply CCA, P/N AY6706619-0 (Sheet 3 of 4)

(1) ITEM NO.	(2) SM&R CODE	(3) CAGEC	(4) PART NUMBER	(5) DESCRIPTION AND USABLE ON CODES (UOC)	(6) QTY
				POWER SUPPLY CCA (P/N AY6706619-0)	
1	PAFZZ	81349	M39003/01-3100	CAPACITOR, FIXED (C1, C9, C10).....	3
2	PAFZZ	81349	M39014/02-1298	CAPACITOR, FIXED (C11-C19, C23)	10
3	PAFZZ	81349	M39003/01-2781	CAPACITOR, FIXED (C2, C4).....	2
4	PAFZZ	81349	M39014/02-1419	CAPACITOR, FIXED (C20, C21)	2
5	PAFZZ	81349	M39006/22-0612	CAPACITOR, FIXED (C22).....	1
6	PAFZZ	81349	M39014/02-1310	CAPACITOR, FIXED (C3, C5-C8, C28)...	5
7	PAFZZ	81349	JANTX1N5555	SEMICONDUCTOR (CR1).....	1
8	PAFZZ	81349	JANTXV1N5416	SEMICONDUCTOR (CR2).....	1
9	PAFZZ	81349	JANTX1N4148-1	SEMICONDUCTOR (CR3).....	1
10	PAFZZ	81349	JANTX1N5615	SEMICONDUCTOR (CR4, CR5).....	2
11	PAFZZ	81349	JANTX4N24A	COUPLER (ISO1).....	1
12	PAFZZ	S7040	TM6706621-0	CHOKE (L1).....	1
13	PAFZZ	81349	JANTX2N6849	TRANSISTOR (Q1).....	1
14	PAFZZ	81349	RLR07C6800GS	RESISTOR (R1, R2).....	2
15	PAFZZ	81349	RNC55J2552FS	RESISTOR (R11).....	1
16	PAFZZ	81349	RNC55H2430FS	RESISTOR (R3, R6).....	2
17	PAFZZ	81349	RNC55J7960FS	RESISTOR (R4).....	1
18	PAFZZ	81349	RNC55J1001FR	RESISTOR, CALIBRATED (R4).....	1
19	PAFZZ	81349	RNC55J1021FR	RESISTOR, CALIBRATED (R4).....	1
20	PAFZZ	81349	RNC55J1051FR	RESISTOR, CALIBRATED (R4).....	1
21	PAFZZ	81349	RNC55J1071FS	RESISTOR, CALIBRATED (R4).....	1
22	PAFZZ	81349	RNC55J1101FS	RESISTOR, CALIBRATED (R4).....	1
23	PAFZZ	81349	RNC55J6190FS	RESISTOR, CALIBRATED (R4).....	1
24	PAFZZ	81349	RNC55J6340FS	RESISTOR, CALIBRATED (R4).....	1
25	PAFZZ	81349	RNC55J6490FS	RESISTOR, CALIBRATED (R4).....	1
26	PAFZZ	81349	RNC55J6650FS	RESISTOR, CALIBRATED (R4).....	1
27	PAFZZ	81349	RNC55J6810FR	RESISTOR, CALIBRATED (R4).....	1
28	PAFZZ	81349	RNC55J6980FS	RESISTOR, CALIBRATED (R4).....	1
29	PAFZZ	81349	RNC55J7150FS	RESISTOR (R4).....	1
30	PAFZZ	81349	RNC55J7320FS	RESISTOR (R4).....	1

Table C-14. Power Supply CCA, P/N AY6706619-0 (Sheet 4 of 4)

(1) ITEM NO.	(2) SM&R CODE	(3) CAGEC	(4) PART NUMBER	(5) DESCRIPTION AND USABLE ON CODES (UOC)	(6) QTY
31	PAFZZ	81349	RNC55J7500FS	RESISTOR (R4)	1
32	PAFZZ	81349	RNC55J7680FS	RESISTOR (R4)	1
33	PAFZZ	81349	RNC55J7870FS	RESISTOR, CALIBRATED (R4)	1
34	PAFZZ	81349	RNC55J8060FS	RESISTOR, CALIBRATED (R4)	1
35	PAFZZ	81349	RNC55J8450FS	RESISTOR (R4)	1
36	PAFZZ	81349	RNC55J9090FS	RESISTOR (R4)	1
37	PAFZZ	81349	RNC55J9310FS	RESISTOR (R4)	1
38	PAFZZ	81349	RNC55J9530FS	RESISTOR, CALIBRATED (R4)	1
39	PAFZZ	81349	RNC55H1001FS	RESISTOR (R5, R7)	2
40	PAFZZ	81349	RNC55J2261FS	RESISTOR (R8)	1
41	PAFZZ	81349	RLR07C5601GS	RESISTOR (R9)	1
42	PAFZZ	81349	M38510/11704BYC	MICROCIRCUIT (U1, U2)	2
43	PAFZZ	S7040	MP6706606-0	SPACER	2
44	XBFZZ	S7040	PC6706618-0	PRINTED WIRE BOARD	1
45	XBFZZ	S7040	MP6706604-0	HEAT SINK	1
46	PAFZZ	S7040	MP6707844-0	HOLDER	1
47	PAFZZ	81349	SE11XC01S	TERMINAL, STUD	8
48	PAFZZ	96906	MS25036-148	TERMINAL LUG	1
49	PAFZZ	80205	NAS620C4L	WASHER, FLAT	5
50	PAFZZ	96906	MS35338-135	WASHER, LOCK	4
51	PAFZZ	80205	NAS671C4	NUT, PLAIN, HEXAGON	4
52	PAFZZ	81349	M16878/4-22-9	WIRE, ELECTRICAL	AR
53	PAFZZ	S7040	WT6707886-0	ACCELERATION SWITCH	1
54	PAFZZ	96906	MS27183-1	WASHER, FLAT	6
55	PAFZZ	96906	MS20470AD2-4	RIVET, SOLID	6
56	PAFZZ	96906	MS51957-15	SCREW, MACHINE	4
57	PAFZZ	81349	M24308/24-8	CONNECTOR, P1	1
58	PAFZZ	81349	M38527/01-030D	INSULATOR	1
59	PAFZZ	18565	60-11-4305-1674	INSULATOR	1
				END OF FIGURE	

NOTE

Above SM&R codes are for the U.S. MARINE CORPS.

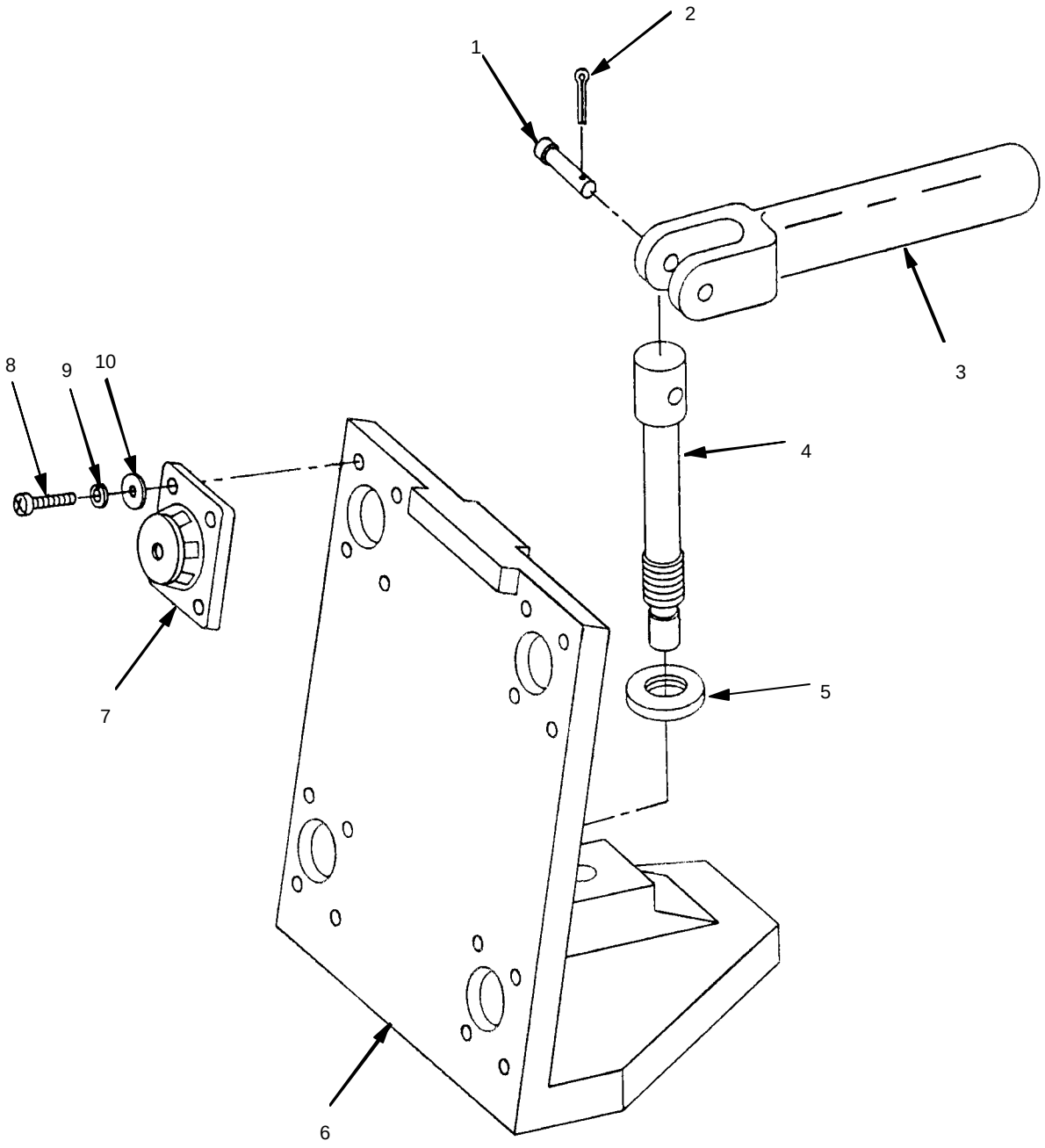

Figure C-15. Mounting Bracket Assembly, P/N 12922098

Table C-15. Mounting Bracket Assembly, P/N 12922098 (Sheet 1 of 2)

SECTION II		TM9-1290-364-14&P				
(1)	(2)	(3)	(4)	(5)	(6)	(7)
ITEM NO	SMR CODE	NSN	CAGEC	PART NUMBER	DESCRIPTION AND USABLE ON CODES(UOC)	QTY
					GROUP 03 FIGURE C-15	
					MOUNTING BRACKET ASSEMBLY (P/N 12922098)	
1	PAOZZ	5315009572401	96906	MS20392-4C53	PIN,STRAIGHT,HEADED.....	1
2	PAOZZ	5315002341864	80205	MS24665-302	PIN,COTTER.....	1
3	PAOZZ	1290010982173	19200	12922094	HANDLE,MACHINED.....	1
4	PAOZZ	5306010974835	19200	12922093	BOLT,EXTERNALLY REL.....	1
5	PAOZZ	5310010976610	19200	12922092	NUT,PLAIN,ROUND.....	1
6	PAOZZ	5340014794523	19200	12922096	BRACKET,MOUNTING.....	1
7	PAOZZ	5342009850248	19200	12922110	MOUNT,RESILIENT.....	4
8	PAOZZ	5305000546669	96906	MS51957-44	SCREW,MACHINE.....	16
9	PAOZZ	5310009338119	96906	MS35338-137	WASHER,LOCK.....	16
10	PAOZZ	5310008805975	81349	REW620C8L	WASHER,FLAT.....	16

END OF FIGURE

NOTE

Above SM&R codes are for the U.S. Army.

Table C-15. Mounting Bracket Assembly, P/N 12922098 (Sheet 2 of 2)

(1) ITEM NO.	(2) SM&R CODE	(3) CAGEC	(4) PART NUMBER	(5) DESCRIPTION AND USABLE ON CODES (UOC)	(6) QTY
				MOUNTING BRACKET ASSEMBLY (P/N 12922098)	
1	PAOZZ	96906	MS20392-4C53	PIN	1
2	PAOZZ	96906	MS24665-302	PIN	1
3	PAOZZ	19200	12922094	HANDLE, MACHINED	1
4	PAOZZ	19200	12922093	BOLT, EXTERNALLY RELIEVED	1
5	PAOZZ	19200	12922092	WASHER, THREADED	1
6	XBOZZ	19200	12922096	BRACKET, MACHINED	1
7	PAOZZ	19200	12922110	SHOCK ABSORBER	4
8	PAOZZ	96906	MS51957-44	SCREW	16
9	PAOZZ	96906	MS35338-137	WASHER	16
10	PAOZZ	81349	REW620C8L	WASHER	16
				END OF FIGURE	

NOTE

Above SM&R codes are for the U.S. Marine Corps.

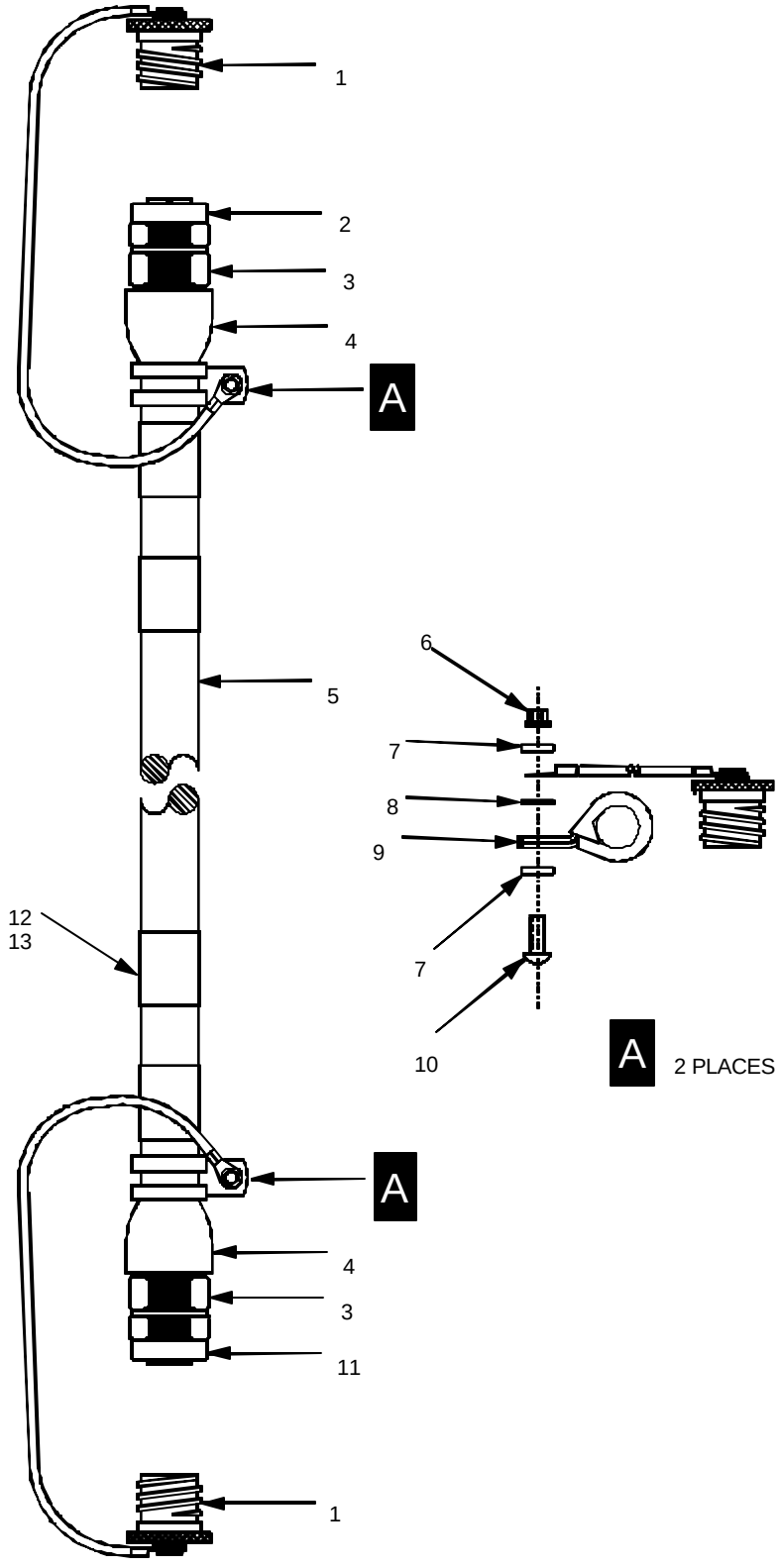

Figure C-16. Interconnection Cable (30-Meter), P/N WA6706719-0

Table C-16. Interconnection Cable (30-Meter), P/N WA6706719-0 (Sheet 1 of 2)

SECTION II		TM9-1290-364-14&P				
(1)	(2)	(3)	(4)	(5)	(6)	(7)
ITEM NO	SMR CODE	NSN	CAGEC	PART NUMBER	DESCRIPTION AND USABLE ON CODES(UOC)	QTY
					GROUP 04 FIGURE C-16	
					INTERCONNECTION CABLE (30-METER) (P/N WA6706719-0)	
1	PAFZZ	5935013870125	81349	D38999/32W13R	COVER,ELECTRICAL CO.....	2
2	PAFZA	5935011227585	81349	D38999/26WC98SN	CONNECTOR,PLUG,ELEC.....	1
3	PAFZZ	5935014793044	06090	209M312-19B	ADAPTER.....	2
4	PAFZZ	5975012916323	06090	202S142-25S	BOOT,DUST AND MOIST.....	2
5	PAFZZ	6145014439994	06090	EPD52416A	CABLE,SPECIAL PURPO.....	1
6	PAFZZ	5310008071473	96906	MS21042L08	NUT,SELF-LOCKING,EX.....	2
7	PAFZZ	5310000695291	80205	NAS620C8	WASHER,FLAT.....	4
8	PAFZZ	5310001384315	96906	MS51859-5	WASHER,FLAT.....	2
9	PAFZZ	5340002008559	96906	MS21919WDG7	CLAMP,LOOP.....	2
10	PAFZZ	5305000546669	96906	MS51957-44	SCREW,MACHINE.....	2
11	PAFZA	5935012338163	81349	D38999/26WC98PN	CONNECTOR,PLUG,ELEC.....	1
12	PAFZZ	5970008715779	81349	M23053/5-208-C	.INSULATION SLEEVING INSULATION .SLEEVING.....	1
13	PAFZZ	5970013555982	06090	TMS-SCE 1/2-2.09	.INSULATION SLEEVING.....	1

END OF FIGURE

NOTE

Above SM&R codes are for the U.S. Army.

Table C-16. Interconnection Cable (30-Meter), P/N WA6706719-0 (Sheet 2 of 2)

(1) ITEM NO.	(2) SM&R CODE	(3) CAGEC	(4) PART NUMBER	(5) DESCRIPTION AND USABLE ON CODES (UOC)	(6) QTY
				INTERCONNECTION CABLE (30-METER) (P/N WA6706719-0)	
1	PAFZZ	81349	D38999/32W13R	COVER, ELECTRICAL	2
2	PAFZZ	81349	D38999/26WC98SN	PLUG, CONNECTOR, ELECTRICAL, P1	1
3	PAFZZ	06090	209M312-19B	BACKSHELL	2
4	PAFZZ	06090	202S142-25S	BOOT	2
5	XBFZZ	06090	EPD52416A	CABLE.....	A/R
6	PAFZZ	96906	MS21042-LO8	NUT	2
7	PAFZZ	80205	NAS620C8	WASHER.....	4
8	PAFZZ	96906	MS51859-5	WASHER.....	2
9	PAFZZ	96906	MS21919WDG7	CLAMP	2
10	PAFZZ	96906	MS51957-44	SCREW	2
11	PAFZZ	81349	D38999/26WC98PN	PLUG, CONNECTOR, ELECTRICAL, P3	1
12	PAFZZ	81349	M23053/5-208-C	SLEEVE, INSULATING, CLEAR	A/R
13	PAFZZ	06090	TMS-SCE 1/2	SLEEVE, INSULATING, WHITE	A/R
				END OF FIGURE	

NOTE

Above SM&R codes are for the U.S. Marine Corps.

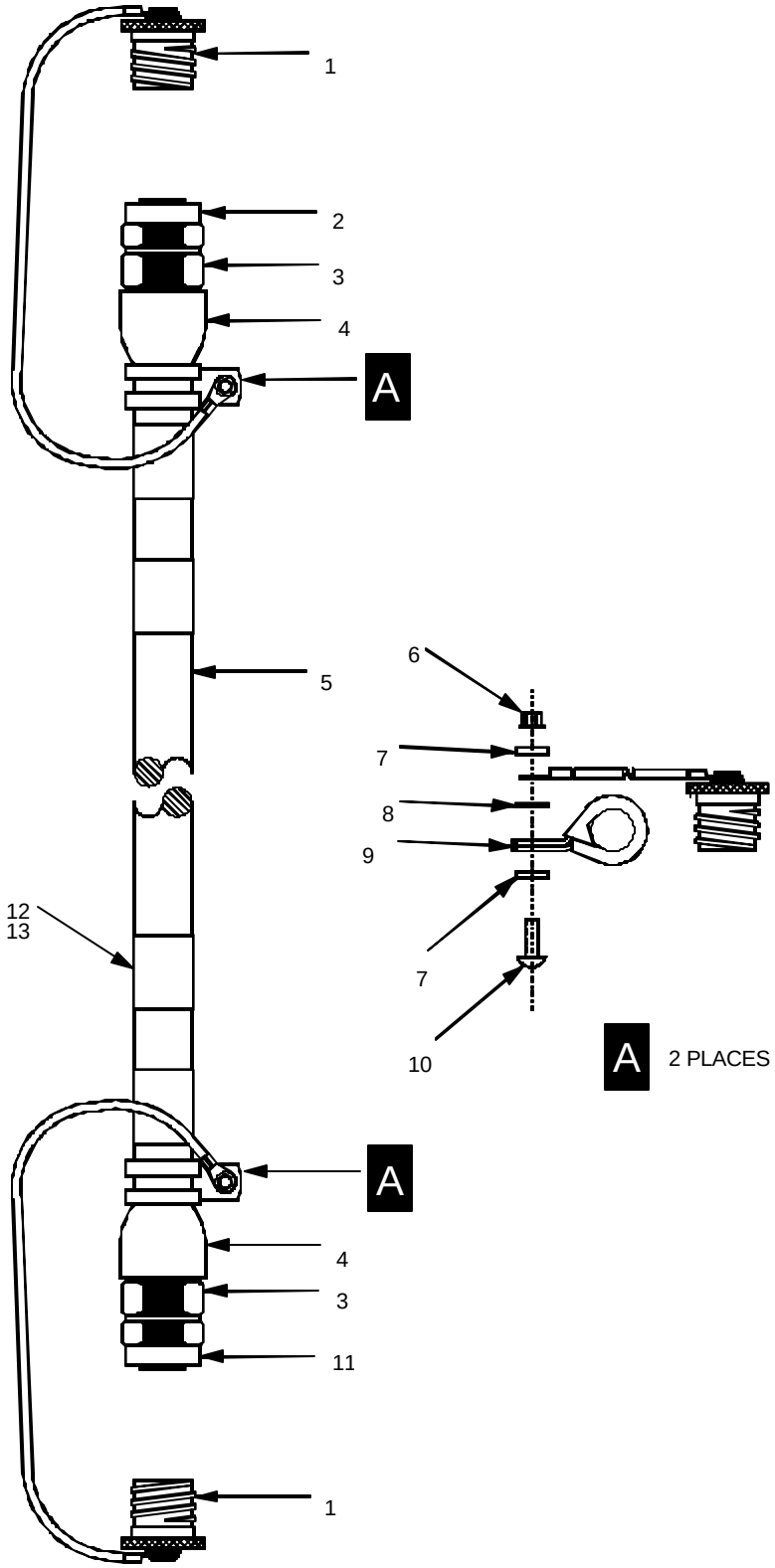

Figure C-17. Power Cable (50-Meter), P/N WA6706717-0

Table C-17. Power Cable (50-Meter), P/N WA6706717-0 (Sheet 1 of 2)

SECTION II		TM9-1290-364-14&P				
(1) ITEM NO	(2) SMR CODE	(3) NSN	(4) CAGEC	(5) PART NUMBER	(6) DESCRIPTION AND USABLE ON CODES(UOC)	(7) QTY
					GROUP 05 FIGURE C-17	
					POWER CABLE (50-METER) (P/N WA6706717-0)	
1	PAFZZ	5935013870125	81349	D38999/32W13R	COVER,ELECTRICAL CO.....	2
2	PAFZZ	5935013580836	81349	D38999/26WC4SN	CONNECTOR,PLUG,ELEC.....	1
3	PAFZZ	5935014793044	06090	209M312-19B	ADAPTER.....	2
4	PAFZZ	5975012916323	06090	202S142-25S	BOOT,DUST AND MOIST.....	2
5	PAFZZ	6145014794524	06090	EPD52415A	.CABLE.....	1
6	PAFZZ	5310008071473	96906	MS21042L08	NUT,SELF-LOCKING,EX.....	2
7	PAFZZ	5310000695291	80205	NAS620C8	WASHER,FLAT.....	4
8	PAFZZ	5310001384315	96906	MS51859-5	WASHER,FLAT.....	2
9	PAFZZ	5340002915347	96906	MS21919WDG8	CLAMP,LOOP.....	2
10	PAFZZ	5305000546669	96906	MS51957-44	SCREW,MACHINE.....	2
11	PAFZA	5935012520635	81349	D38999/26WC4PN	CONNECTOR,PLUG,ELEC.....	1
12	PAFZZ	5970008715779	81349	M23053/5-208-C	.INSULATION SLEEVING INSULATION .SLEEVING.....	1
13	PAFZZ	5970013555982	06090	TMS-SCE 1/2-2.09	.INSULATION SLEEVING.....	3

END OF FIGURE

NOTE

Above SM&R codes are for the U.S. Army.

Table C-17. Power Cable (50-Meter), P/N WA6706717 (Sheet 2 of 2)

(1) ITEM NO.	(2) SM&R CODE	(3) CAGEC	(4) PART NUMBER	(5) DESCRIPTION AND USABLE ON CODES (UOC)	(6) QTY
				POWER CABLE (50-METER) (P/N WA6706717-0)	
1	PAFZZ	81349	D38999/32W13R	COVER, ELECTRICAL	2
2	PAFZZ	81349	D38999/26WC4SN	PLUG, CONNECTOR, ELECTRICAL, P1	1
3	PAFZZ	06090	209M312-19B	BACKSHELL	2
4	PAFZZ	06090	202S142-25S	BOOT	2
5	XBFZZ	06090	EPD52415A	CABLE	A/R
6	PAFZZ	96906	MS21042-LO8	NUT	2
7	PAFZZ	80205	NAS620C8	WASHER	4
8	PAFZZ	96906	MS51859-5	WASHER	2
9	PAFZZ	96906	MS21919WDG8	CLAMP	2
10	PAFZZ	96906	MS51957-44	SCREW	2
11	PAFZZ	81349	D38999/26WC4PN	PLUG, CONNECTOR, ELECTRICAL, P2	1
12	PAFZZ	81349	M23053/5-208-C	SLEEVE, INSULATING, CLEAR	A/R
13	PAFZZ	06090	TMS-SCE 1/2	SLEEVE, INSULATING, WHITE	A/R
				END OF FIGURE	

NOTE

Above SM&R codes are for the U.S. Marine Corps.

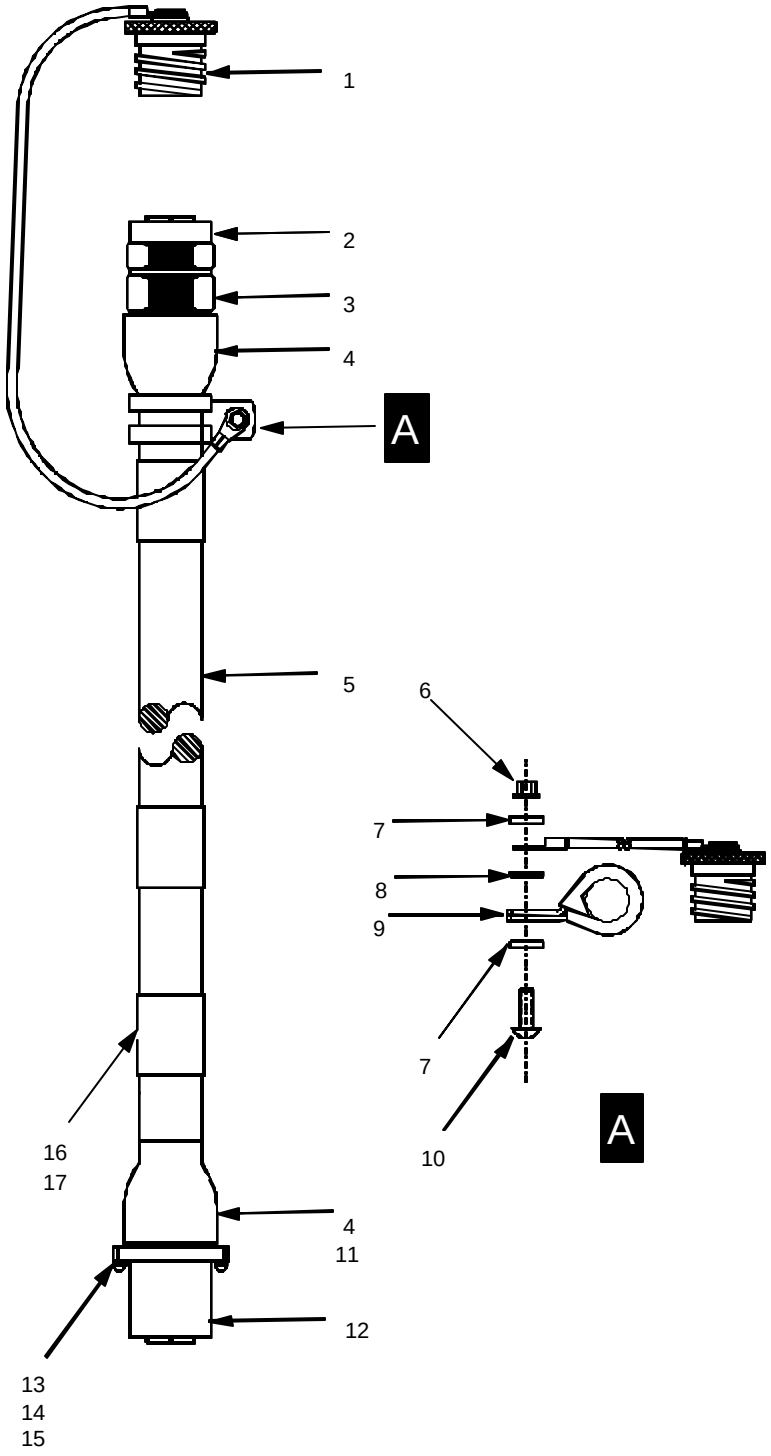

Figure C-18. Secondary Power Source Cable, P/N WA6708023-0

Table C-18. Secondary Power Source Cable, P/N WA6708023-0 (Sheet 1 of 2)

SECTION II		TM9-1290-364-14&P				
(1) ITEM NO	(2) SMR CODE	(3) NSN	(4) CAGEC	(5) PART NUMBER	(6) DESCRIPTION AND USABLE ON CODES(UOC)	(7) QTY
					GROUP 06 FIGURE C-18	
					SECONDARY POWER SOURCE CABLE (P/N WA6708023-0)	
1	PAFZZ	5935013870125	81349	D38999/32W13R	COVER,ELECTRICAL CO.....	1
2	PAFZZ	5935013580836	81349	D38999/26WC4SN	CONNECTOR,PLUG,ELEC.....	1
3	PAFZZ	5935014793044	06090	209M312-19B	ADAPTER.....	1
4	PAFZZ	5975012916323	06090	202S142-25S	BOOT,DUST AND MOIST.....	2
5	PAFZZ	6145014794524	06090	EPD52415A	.CABLE.....	1
6	PAFZZ	5310008071473	96906	MS21042L08	NUT,SELF-LOCKING,EX.....	1
7	PAFZZ	5310000695291	80205	NAS620C8	WASHER,FLAT.....	2
8	PAFZZ	5310001384315	96906	MS51859-5	WASHER,FLAT.....	1
9	PAFZZ	5340002915347	96906	MS21919WDG8	CLAMP,LOOP.....	1
10	PAFZZ	5305000546669	96906	MS51957-44	SCREW,MACHINE.....	1
11	PAFZZ	5935014443673	S7040	MP6708087-0	ADAPTER,CONNECTOR.....	1
12	PAFZZ	5935010968047	12813	189636	CONNECTOR,RECEPTACL.....	1
13	PAFZZ	5305000545648	96906	MS51957-14	SCREW,MACHINE.....	4
14	PAFZZ	5310009338118	96906	MS35338-135	WASHER,LOCK.....	4
15	PAFZZ	5310007239676	80205	NAS620C4L	WASHER,FLAT.....	4
16	PAFZZ	5970008715779	81349	M23053/5-208-C	.INSULATION SLEEVING INSULATION SLEEVING.....	1
17	PAFZZ	5970013555982	06090	TMS-SCE 1/2-2.09	.INSULATION SLEEVING.....	3

END OF FIGURE

NOTE

Above SM&R codes are for the U.S. Army.

Table C-18. Secondary Power Source Cable, P/N WA6708023-0 (Sheet 2 of 2)

(1) ITEM NO.	(2) SM&R CODE	(3) CAGEC	(4) PART NUMBER	(5) DESCRIPTION AND USABLE ON CODES (UOC)	(6) QTY
				SECONDARY POWER SOURCE CABLE (P/N WA6708023-0)	
1	PAFZZ	81349	D38999/32W13R	COVER, ELECTRICAL	1
2	PAFZZ	81349	D38999/26WC4SN	PLUG, CONNECTOR, ELECTRICAL, P1	1
3	PAFZZ	06090	209M312-19B	BACKSHELL	1
4	PAFZZ	06090	202S142-25S	BOOT	2
5	MFFZZ	06090	EPD52415A	CABLE	A/R
6	PAFZZ	96906	MS21042-LO8	NUT	1
7	PAFZZ	80205	NAS620C8	WASHER	2
8	PAFZZ	96906	MS51859-5	WASHER	1
9	PAFZZ	96906	MS21919WDG8	CLAMP	1
10	PAFZZ	96906	MS51957-44	SCREW	1
11	PAFZZ	S7040	MP6708087-0	ADAPTER	1
12	PAFZZ	12813	189636	PLUG, CONNECTOR, ELECTRICAL, P2	1
13	PAFZZ	96906	M551957-14	SCREW	4
14	PAFZZ	96906	MS35338-135	WASHER	4
15	PAFZZ	80205	NAS620C4L	WASHER	4
16	PAFZZ	81349	M23053/5-208-C	SLEEVE, INSULATING, CLEAR	A/R
17	PAFZZ	06090	TMS-SCE 1/2	SLEEVE, INSULATING, WHITE	A/R
				END OF FIGURE	

NOTE

Above SM&R codes are for the U.S. Marine Corps.

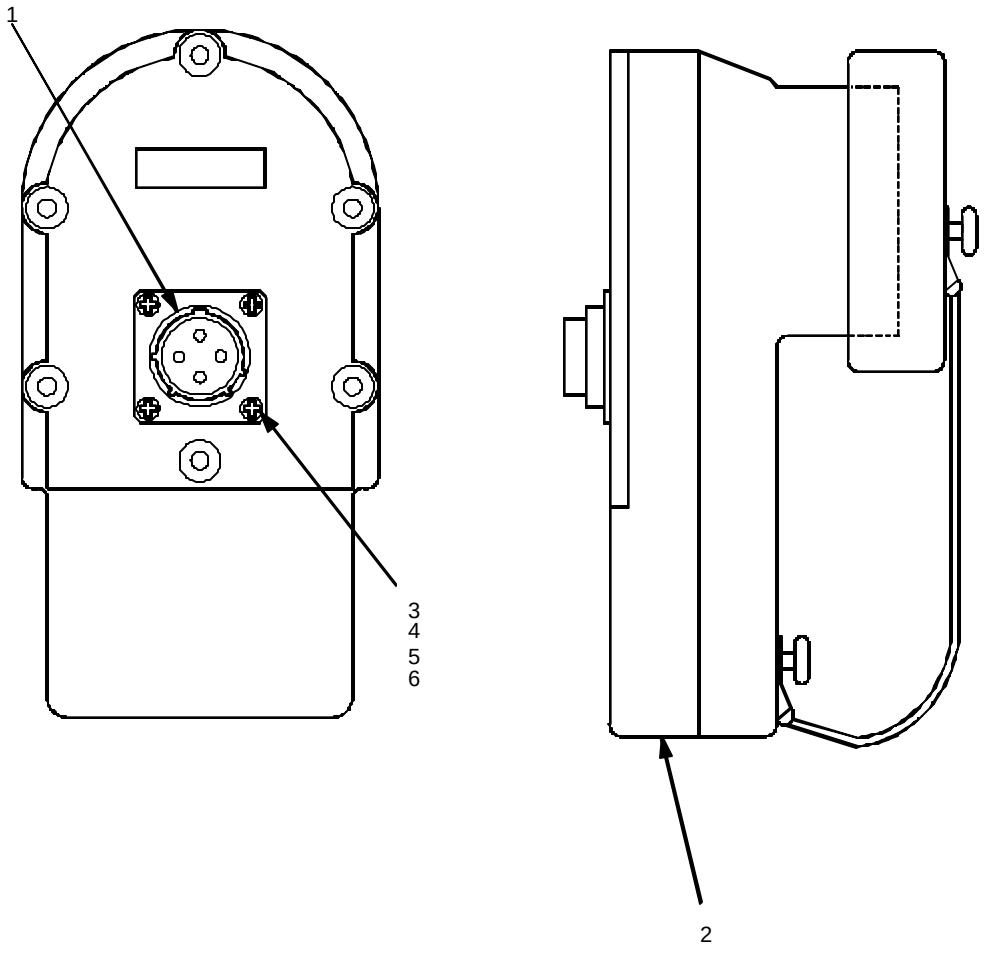

CMVS011/WA6706718-

Figure C-19. Power Adapter, P/N WA6706718-0

Table C-19. Power Adapter, P/N WA6706718-0 (Sheet 1 of 2)

SECTION II		TM9-1290-364-14&P				
(1) ITEM NO	(2) SMR CODE	(3) NSN	(4) CAGEC	(5) PART NUMBER	(6) DESCRIPTION AND USABLE ON CODES(UOC)	(7) QTY
					GROUP 07 FIGURE C-19	
					POWER ADAPTER, P/N WA6706718-0	
1	PAFZZ	5935014397099	81349	D38999/20WC4SN	CONNECTOR,RECEPTACL CONNECTOR, RECEPTACL (P1).....	1
2	XDFZZ		S7040	TGC2338	CONNECTOR ASSEMBLY.....	1
3	PAFZZ	5305000545648	96906	MS51957-14	SCREW,MACHINE.....	4
4	PAFZZ	5310007239676	80205	NAS620C4L	WASHER,FLAT.....	4
5	PAFZZ	5310009338118	96906	MS35338-135	WASHER,LOCK.....	4
6	PAFZZ	5310008107785	80205	NAS671-4	NUT,PLAIN,HEXAGON.....	4

END OF FIGURE

NOTE

Above SM&R codes are for the U.S. Army.

Table C-19. Power Adapter, P/N WA6706718-0 (Sheet 2 of 2)

(1) ITEM NO.	(2) SM&R CODE	(3) CAGEC	(4) PART NUMBER	(5) DESCRIPTION AND USABLE ON CODES (UOC)	(6) QTY
				POWER ADAPTER (P/N WA6706718-0)	
1	PAFZZ	81349	D38999/20WC4SN	CONNECTOR, RECEPTACLE, ELECTRICAL, P1	1
2	PAFZZ	S7040	TGC2338	CONNECTOR, ELECTRICAL, P2.....	1
3	PAFZZ	96906	MS51957-14	SCREW.....	4
4	PAFZZ	80205	NAS620C4L	WASHER.....	4
5	PAFZZ	80205	MS35338-135	WASHER.....	4
6	PAFZZ	80205	NAS670C4	NUT	4
				END OF FIGURE	

NOTE

Above SM&R codes are for the U.S. Marine Corps.

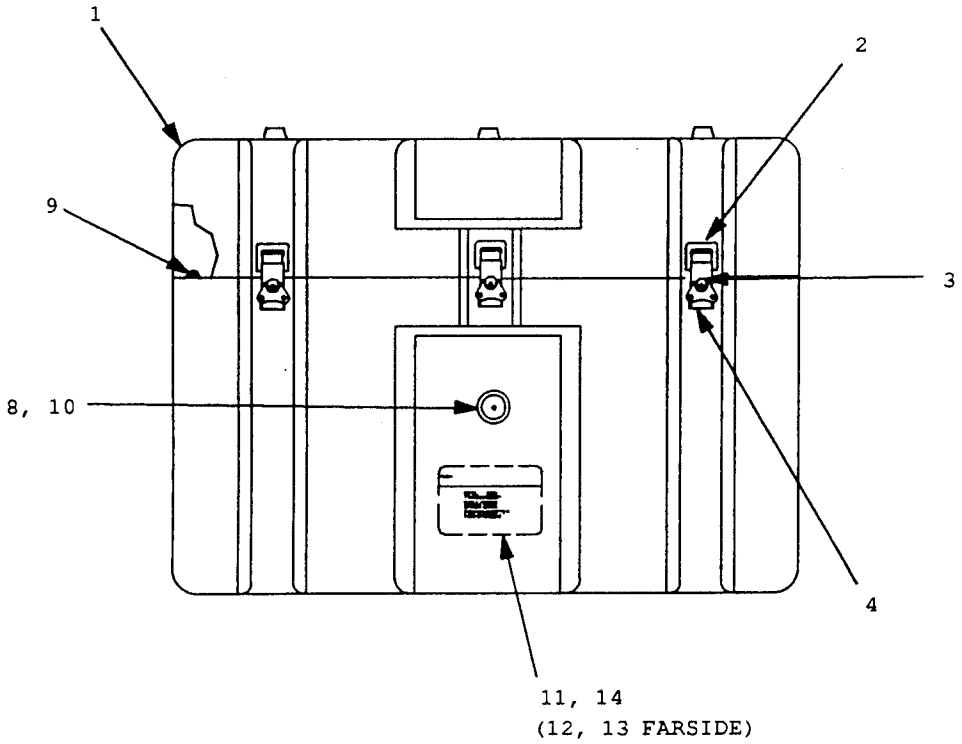

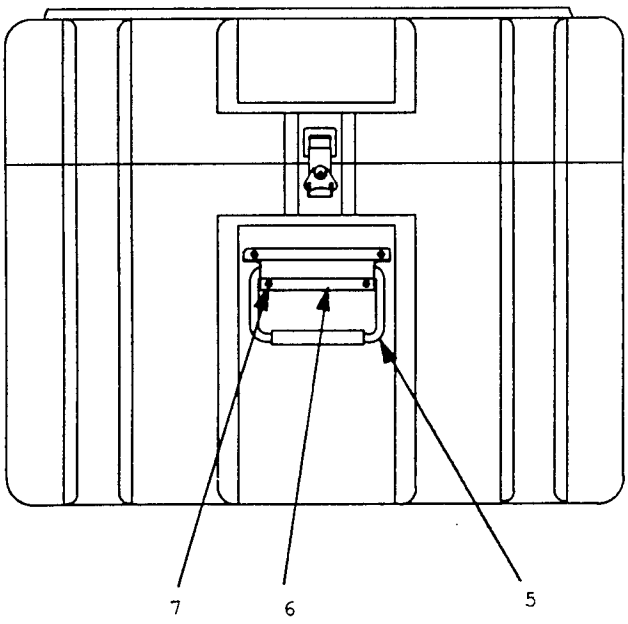

Figure C-20. Carrying Case, P/N AM6706714-0

Table C-20. Carrying Case, P/N AM6706714-0 (Sheet 1 of 2)

SECTION II		TM9-1290-364-14&P				
(1) ITEM NO	(2) SMR CODE	(3) NSN	(4) CAGEC	(5) PART NUMBER	(6) DESCRIPTION AND USABLE ON CODES(UOC)	(7) QTY
					GROUP 08 FIGURE C-20	
					CARRYING CASE (P/N AM6706714-0)	
1	XAFZZ		19178	ZRM2212-0512-A1C	CASE	1
2	XAFZZ		19178	2-57-2778-11	STRIKE	8
3	XAFZZ		11083	9M5731	RIVET, BLIND	32
4	XAFZZ		19178	2-57-1680-11	LATCH	8
5	XAFZZ		19178	H980-LS-2RG	HANDLE	2
6	XAFZZ		19178	H984-400	PLATE, HANDLE	2
7	XAFZZ		81349	M24243/6-A608H	RIVET,BLIND	8
8	PAFZZ	5330013147738	03663	ZP105003	GASKET	1
9	PAFZZ	4820007606830	98376	ZSP6-037-1	VALVE,VACUUM BREAKI	1
10	PAFZZ	5320012877134	80205	NAS9301E-5-04	RIVET,BLIND	4
11	PAFZZ	9905014365681	S7040	NP6706713-0	PLATE,IDENTIFICATIO N,SYSTEM	1
12	PAFZA	5320010978082	11815	CR3223-4-4	RIVET,BLIND	4
13	PAFZZ	9905014365680	S7040	NP6706712-0	PLATE,IDENTIFICATIO N,TRANSIT CASE	1

END OF FIGURE

NOTE

Above SM&R codes are for the U.S. Army.

Table C-20. Carrying Case, P/N AM6706714-0 (Sheet 2 of 2)

(1) ITEM NO.	(2) SM&R CODE	(3) CAGEC	(4) PART NUMBER	(5) DESCRIPTION AND USABLE ON CODES (UOC)	(6) QTY
				TRANSIT CASE (P/N AM6706714-0)	
1	XAOFF	19178	ZRM2212-0512-A1C	CASE	1
2	XAFFF	19178	2-57-2778-11	STRIKE	8
3	XAFFF	19178	SD46BS	RIVET, LATCH/STRIKE	32
4	XAFFF	19178	2-57-1680-11	LATCH	8
5	XAFFF	19178	H980-LS-2RG	HANDLE	1
6	XAFFF	19178	H984-400	PLATE, HANDLE	1
7	XAFFF	19178	AD68H	RIVET, HANDLE	4
8	PAFFF	19178	MP921064	NUT	1
9	PAFFF	19178	ZP105003	GASKET	1
10	PAFFF	19178	ZSP6-037-1	VALVE	1
11	PAOZZ	05693	CR3223-5-4	RIVET	4
12	PAOZZ	S7040	NP6706713-0	NAME PLATE	1
13	PAOZZ	05693	CR3223-4-4	RIVET	4
14	PAOZZ	S7040	NP6706712-0	NAME PLATE	1
				END OF FIGURE	

NOTE

Above SM&R codes are for the U.S. Marine Corps.

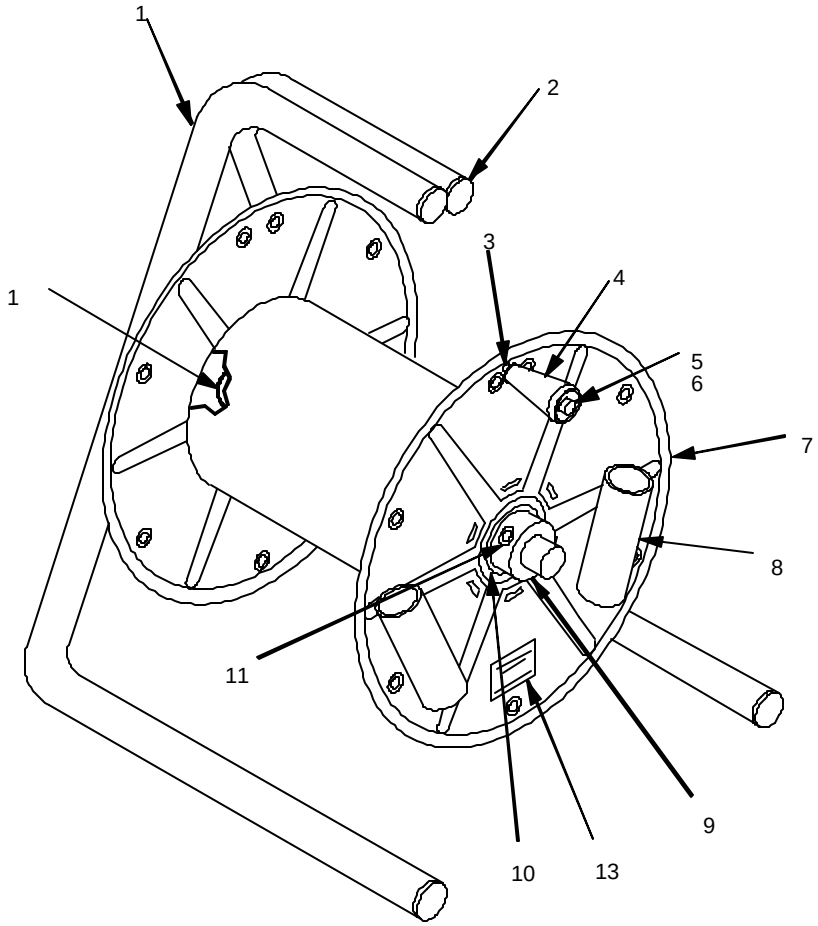

Figure C-21. Cable Drum, P/N AY6707950-0

Table C-21. Cable Drum, P/N AY6707950-0 (Sheet 1 of 2)

SECTION II		TM9-1290-364-14&P				
(1) ITEM NO	(2) SMR CODE	(3) NSN	(4) CAGEC	(5) PART NUMBER	(6) DESCRIPTION AND USABLE ON CODES(UOC)	(7) QTY
					GROUP 09 FIGURE C-21	
					CABLE DRUM, P/N AY6707950-0	
1	PAOZZ	4933014521256	S7040	950330	CHASSIS,REEL,CABLE.....	1
2	PAOZZ	5340014521262	S7040	950326-2	PLUG.....	4
3	PAOZZ	5305014521263	S7040	950326-4	SCREW,MACHINE.....	1
4	PAOZZ	5340014521257	S7040	950326-5	HANDLE.....	1
5	PAOZZ	5305014521259	S7040	950326-6	SCREW,MACHINE.....	1
6	PAOZZ	5310014709135	S7040	950326-7	WASHER.....	2
7	PAOZZ	4933014521260	S7040	950328	REEL,CABLE.....	1
8	XAOZZ		S7040	950326-17	CONNECTOR ENCLOSURE.....	2
9	PAOZZ	3040014527983	S7040	950326-12	COLLAR,RETAINING.....	1
10	PAOZZ	5310014521264	S7040	950326-14	WAVY WASHER.....	1
11	PAOZZ	5305014521261	S7040	950326-13	SCREW,SET.....	1

END OF FIGURE

NOTE

Above SM&R codes are for the U.S. Army.

Table C-21. Cable Drum, P/N AY6707950-0 (Sheet 2 of 2)

(1) ITEM NO.	(2) SM&R CODE	(3) CAGEC	(4) PART NUMBER	(5) DESCRIPTION AND USABLE ON CODES (UOC)	(6) QTY
				CABLE DRUM (P/N AY6707950-0)	
1	PAOZZ	8U710	950330	CHASSIS	1
2	PAOZZ	8U710	950326-2	PLUG	4
3	PAOZZ	8U710	950326-4	RETAINER, SCREW	1
4	PAOZZ	8U710	950326-5	HANDLE	1
5	PAOZZ	8U710	950326-6	SCREW	1
6	PAOZZ	8U710	950326-7	WASHER	2
7	PAOZZ	8U710	950328	CABLE REEL ASSY	1
8	PAOZZ	8U710	950326-17	ENCLOSURE, CONNECTOR	2
9	PAOZZ	8U710	950326-12	COLLAR	1
10	PAOZZ	8U710	950326-14	WASHER, WAVE	1
11	PAOZZ	8U710	950326-13	SCREW, COLLAR	1
12	PAOZZ	8U710	950326-15	LINING, BRAKE	2
13	PAOZZ	S7040	NP6706720-0	NAME PLATE	1
				END OF FIGURE	

NOTE

Above SM&R codes are for the U.S. Marine Corps.

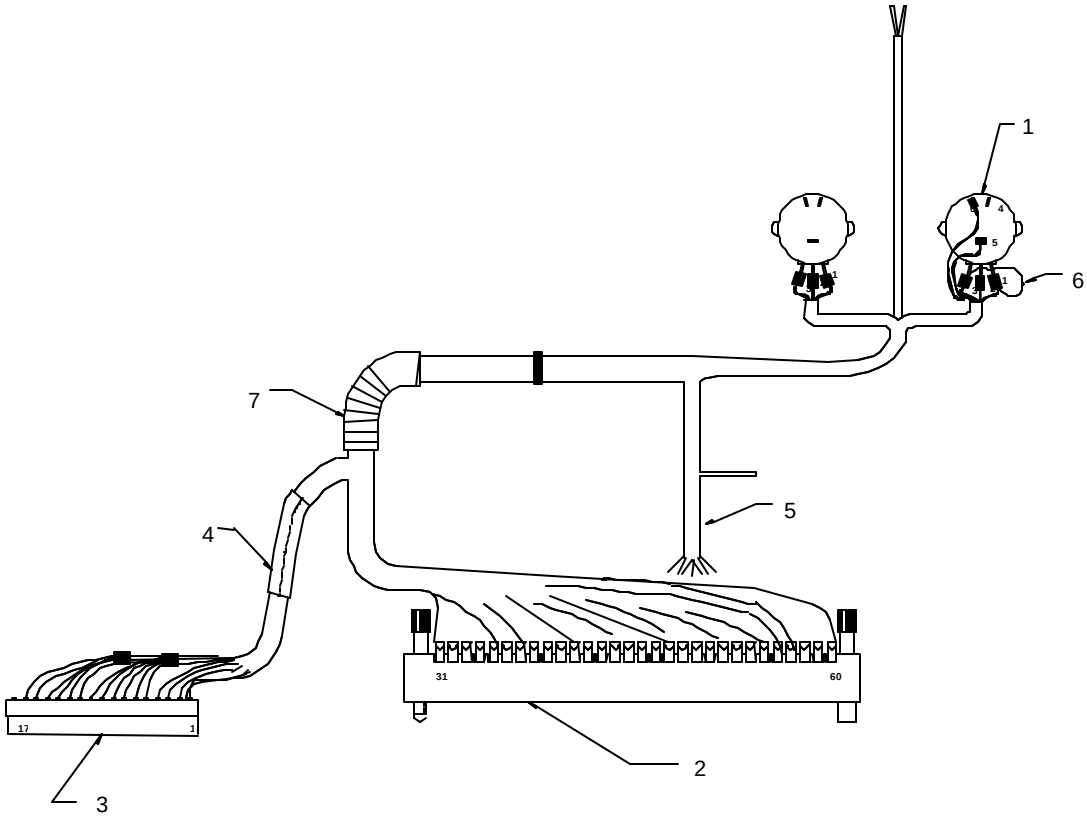

Figure C-22. CPDU Harness Assembly, P/N WA6706707-0

Table C-22. CPDU Harness Assembly, P/N WA6706707-0 (Sheet 1 of 2)

SECTION II		TM9-1290-364-14&P				
(1)	(2)	(3)	(4)	(5)	(6)	(7)
ITEM NO	SMR CODE	NSN	CAGEC	PART NUMBER	DESCRIPTION AND USABLE ON CODES(UOC)	QTY
					GROUP 10 FIGURE C-22	
					HARNESS ASSEMBLY CABLE (P/N 6706707-0)	
1	PAFZZ	5905014794525	01121	GD2P050F103UA	RESISTOR.....	2
2	PAFZZ	5935010903110	81349	M55302/55-A60M	CONNECTOR,PLUG,ELEC.....	1
3	PAFZZ	6150014521255	S7040	399-00Z-A548	CONNECTOR,HARNESS.....	1
4	PAFZZ	5970007402971	81349	M23053/5-107-9	.INSULATION SLEEVING INSULATION SLEEVING.....	1
5	PAFZA	6145009489479	81349	M22759/11-24-9	.WIRE,ELECTRICAL.....	1

END OF FIGURE

NOTE

Above SM&R codes are for the U.S. Army.

Table C-22. CPDU Harness Assembly, P/N WA6706707-0 (Sheet 2 of 2)

(1) ITEM NO.	(2) SM&R CODE	(3) CAGEC	(4) PART NUMBER	(5) DESCRIPTION AND USABLE ON CODES (UOC)	(6) QTY
				CPDU HARNESS ASSY (P/N WA6706707-0)	
1	PAFZZ	01121	GD2P050F103UA	POTENTIONMETER	2
2	PAFZZ	81349	M55302/55-A60M	CONNECTOR, P4	1
3	PAFZZ	S7040	399-00Z-A548	CONNECTOR, J1	1
4	PAFZZ	81349	M23053/5-107-9	SLEEVE, HEAT SHRINK	A/R
5	PAFZZ	81349	M16878/4BEE9	WIRE	A/R
6	PAFZZ	81349	RLR07C7501GS	RESISTOR, 7.5 KΩ, R1	1
7	PAFZZ	76381	361	TAPE INSULATION GLASS CLOTH .5" WIDE	AR
7a	PAFZZ	FLUORGLAS	2915-7	TAPE INSULATION GLASS CLOTH .5" WIDE	ALT
				END OF FIGURE	

NOTE

Above SM&R codes are for the U.S. Marine Corps.

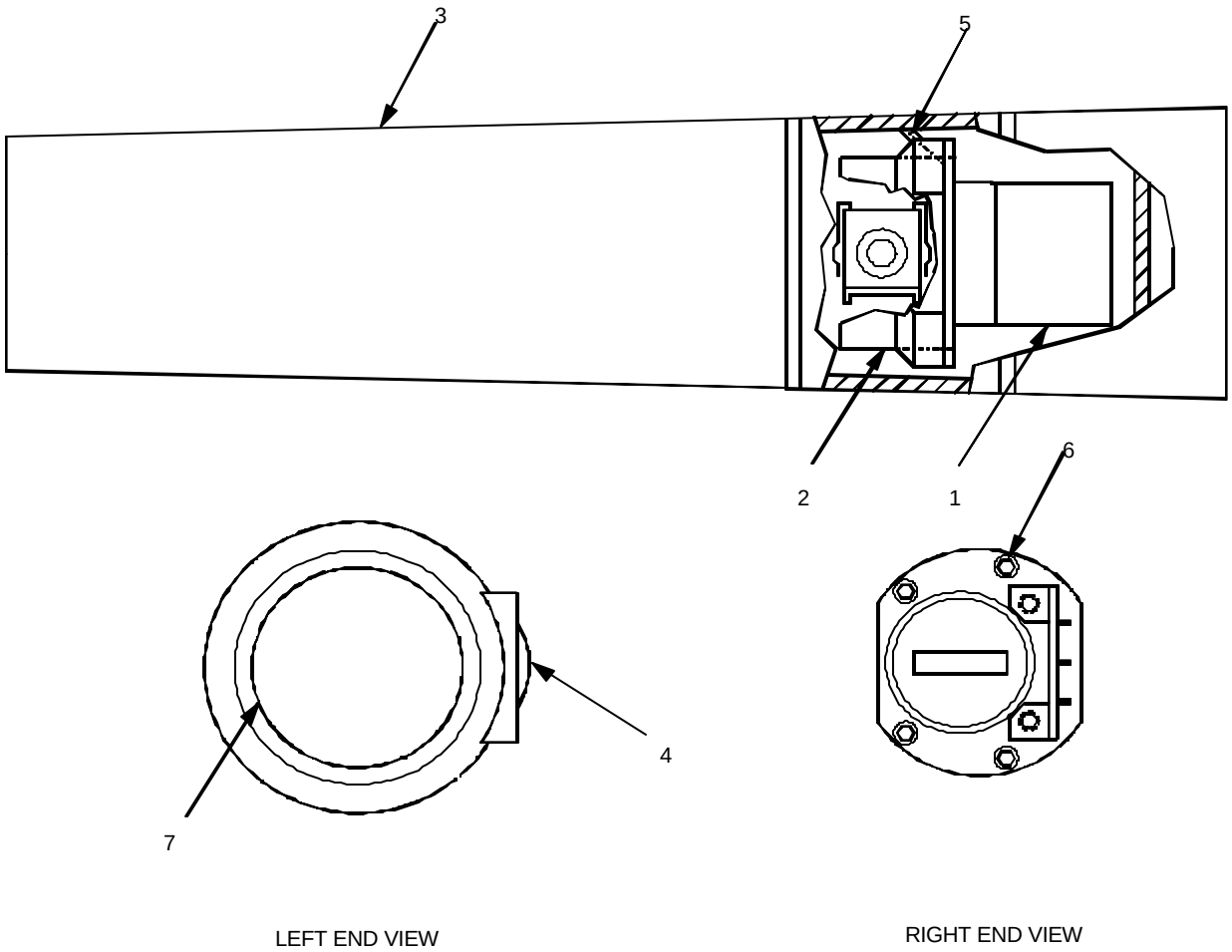

Figure C-23. Doppler Simulator, P/N AY6706690-0

Table C-23. Doppler Simulator, P/N AY6706690-0
(Sheet 1 of 2)

(1) ITEM NO.	(2) SM&R CODE	(3) CAGEC	(4) PART NUMBER	(5) DESCRIPTION AND USABLE ON CODES (UOC)	(6) QTY
				DOPPLER SIMULATOR (P/N AY6706690-0)	
1	XAFZZ	S7040	AY6706689-0	MODULATOR, SUB-ASSY, DOPPLER SIMULATOR (SEE FIG. C-24 FOR BKDN)	1
2	XAFZZ	S7040	MP6706686-0	INSERT	1
3	XAFZZ	S7040	MP6706687-0	SIMULATOR HOUSING	1
4	XAFZZ	84961	J188A-2S	SWITCH, PUSHBUTTON	1
5	XAFZZ	96906	MS51021-2	SETSCREW	2
6	XAFZZ	96906	MS16995-3	SCREW	4
7	XAFZZ	S7040	NP6706688-0	NAME PLATE	1
				END OF FIGURE	

NOTE

Above SM&R codes are for the U.S. Army.

Table C-23. Doppler Simulator, P/N AY6706690-0
(Sheet 2 of 2)

(1) ITEM NO.	(2) SM&R CODE	(3) CAGEC	(4) PART NUMBER	(5) DESCRIPTION AND USABLE ON CODES (UOC)	(6) QTY
				DOPPLER SIMULATOR (P/N AY6706690-0)	
1	PAFZZ	S7040	AY6706689-0	MODULATOR, SUB-ASSY, DOPPLER SIMULATOR (SEE FIG. C-24 FOR BKDN)	1
2	PAFZZ	S7040	MP6706686-0	INSERT	1
3	XAFZZ	S7040	MP6706687-0	SIMULATOR HOUSING	1
4	XAFZZ	84961	J188A-2S	SWITCH, PUSHBUTTON	1
5	PAFZZ	96906	MS51021-2	SETSCREW	2
6	PAFZZ	96906	MS16995-3	SCREW	4
7	PAFZZ	S7040	NP6706688-0	NAME PLATE	1
				END OF FIGURE	

NOTE

Above SM&R codes are for the U.S. Marine Corps.

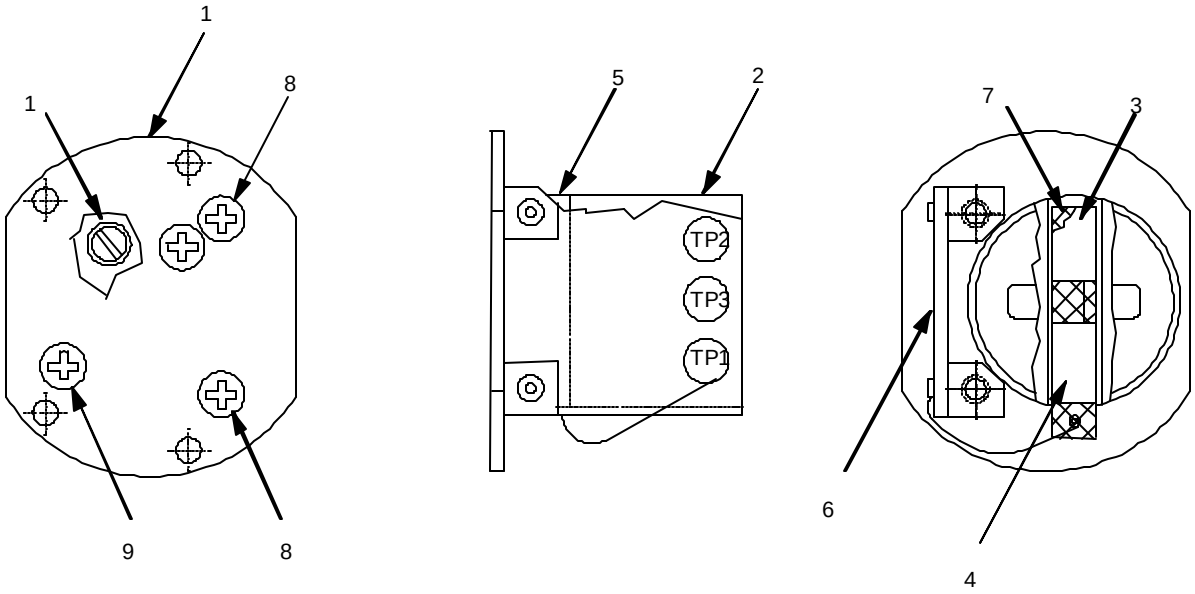

Figure C-24. Modulator Sub-assembly, P/N AY6706689-0

Table C-24. Modulator Sub-assembly, P/N AY6706689-0

(1) ITEM NO.	(2) SM&R CODE	(3) CAGEC	(4) PART NUMBER	(5) DESCRIPTION AND USABLE ON CODES (UOC)	(6) QTY
				MODULATOR SUB-ASSEMBLY (P/N AY6706689-0)	
1	XAFZZ	S7040	MP6706681-0	PLATE	1
2	XAFZZ	S7040	MP6706682-0	HORN, ANTENNA	1
3	XAFZZ	S7040	MP6706683-0	PAD, BRASS	1
4	XAFZZ	S7040	MP6706684-0	PAD, DIELECTRIC	1
5	XAFZZ	S7040	MP6706685-0	HOUSING	1
6	PAFZZ	S7040	AY6706676-0	CCA, DOPPLER SIMULATOR (SEE FIG. C-25 FOR BKDN)	1
7	XAFZZ	S7040	AY6706677-0	CCA, RF	1
8	PAFZZ	96906	MS24693-C2	SCREW	2
9	PAFZZ	96906	MS24693-C6	SCREW	2
10	PAFZZ	88044	AN500D4-5	SCREW	2
				END OF FIGURE	

NOTE

Above SM&R codes are for the U.S. Marine Corps.

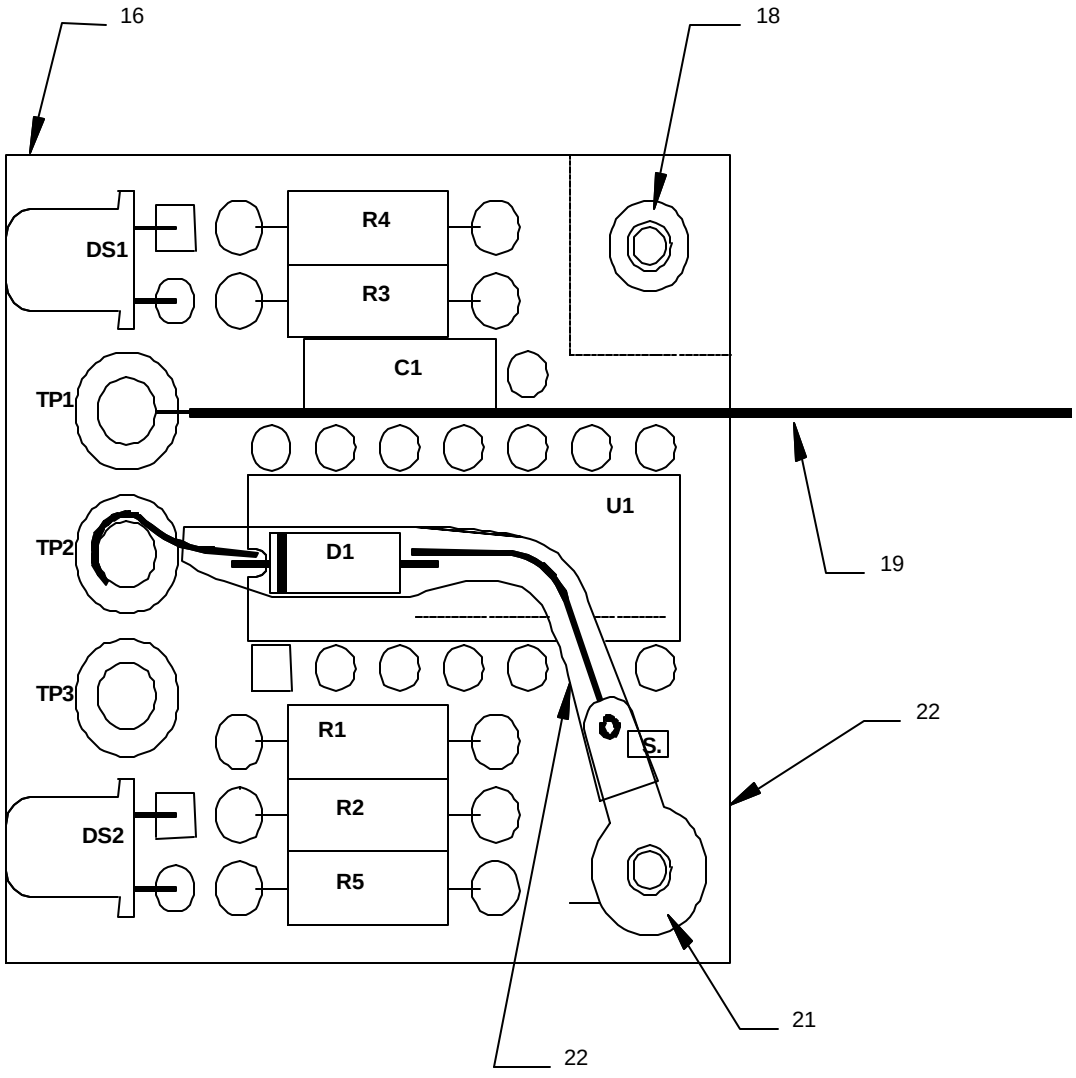

Figure C-25. Doppler Simulator CCA, P/N AY6706676-0 (Sheet 1 of 2)

LEGEND

REF DES	ITEM NO.	REF DES	ITEM NO.	REF DES	ITEM NO.
C1	1	R2	24	R2	44
DS1	2	R2	25	R2	45
DS2	2	R2	26	R2	46
R1	3	R2	27	R2	47
R2	4	R2	28	R2	48
R2	5	R2	29	R2	49
R2	6	R2	30	R2	50
R2	7	R2	31	R2	51
R2	8	R2	32	R2	52
R2	9	R2	33	R2	53
R2	10	R2	34	R2	54
R2	11	R2	35		
R3	12	R2	36		
R4	13	R2	37		
R5	13	R2	38		
TP1	14	R2	39		
TP2	14	R2	40		
TP3	14	R2	41		
U1	15	R2	42		
D1	23	R2	43		

Figure C-25. Doppler Simulator CCA, P/N AY6706676-0 (Sheet 2 of 2)

Table C-25. Doppler Simulator CCA, P/N AY6706676-0 (Sheet 1 of 2)

(1) ITEM NO.	(2) SM&R CODE	(3) CAGEC	(4) PART NUMBER	(5) DESCRIPTION AND USABLE ON CODES (UOC)	(6) QTY
				DOPPLER SIMULATOR CCA (P/N AY6706676-0)	
1	XADZZ	81349	M39014/22-1011	CAPACITOR, FIXED (C1).....	1
2	XADZZ	50434	HLMP-1790	LITE EMITTING DIODEDS (DS1, DS2)...	2
3	XADZZ	81349	RLR05C1003GR	RESISTOR (R1).....	1
4	XADZZ	81349	RLR05C3921FR	RESISTOR (R2).....	1
5	XADZZ	81349	RLR05C4021FR	RESISTOR (R2).....	1
6	XADZZ	81349	RLR05C4121FS	RESISTOR (R2).....	1
7	XADZZ	81349	RLR05C4221FR	RESISTOR (R2).....	1
8	XADZZ	81349	RLR05C4321FR	RESISTOR (R2).....	1
9	XADZZ	81349	RLR05C4441FR	RESISTOR (R2).....	1
10	XADZZ	81349	RLR05C4531FR	RESISTOR (R2).....	1
11	XADZZ	81349	RLR05C4641FR	RESISTOR (R2).....	1
12	XADZZ	81349	RLR05C51R0GS	RESISTOR (R3).....	1
13	XADZZ	81349	RLR05C2000GS	RESISTOR (R4, R5)	2
14	XADZZ	81349	SE11XC01S	TERMINAL, STUD (TP1-TP3)	3
15	XADZZ	81349	M38510/65701BCA	MICROCIRCUIT (U1).....	1
16	XADZZ	S7040	PC6706580-0	PRINTED WIRE BOARD.....	1
17	XADZZ	98571	1107022	TERMINAL, LUG.....	1
18	XADZZ	80205	NAS620C4	WASHER, FLAT	1
19	XADZZ	81349	M81044/12-24-1	WIRE, ELECTRICAL	AR
20	XADZZ	81349	M81044/12-24-3	WIRE, ELECTRICAL	AR
21	XADZZ	81349	M23053/5-105-9	INSULATION, SLEEVING.....	AR
22	XADZZ	S7040	MP6706680-0	FASTENER, CHASSIS	2
23	XADZZ	81349	JANTX1N4148-1	SEMICONDUCTOR (D1).....	1
24	XADZZ	81349	RLR05C4751FR	RESISTOR (R2).....	1
25	XADZZ	81349	RLR05C4871FR	RESISTOR (R2).....	1
26	XADZZ	81349	RLR05C4991FR	RESISTOR (R2).....	1
				END OF FIGURE	

NOTE

Above SM&R codes are for the U.S. Marine Corps.

Table C-25. Doppler Simulator CCA, P/N AY6706676-0 (Sheet 2 of 2)

(1) ITEM NO.	(2) SM&R CODE	(3) CAGEC	(4) PART NUMBER	(5) DESCRIPTION AND USABLE ON CODES (UOC)	(6) QTY
27	XADZZ	81349	RLR05C5111FR	RESISTOR (R2).....	1
28	XADZZ	81349	RLR05C5231FR	RESISTOR (R2).....	1
29	XADZZ	81349	RLR05C5361FR	RESISTOR (R2).....	1
30	XADZZ	81349	RLR05C5491FR	RESISTOR (R2).....	1
31	XADZZ	81349	RLR05C5621FR	RESISTOR (R2).....	1
32	XADZZ	81349	RLR05C5761FR	RESISTOR (R2).....	1
33	XADZZ	81349	RLR05C5901FR	RESISTOR (R2).....	1
34	XADZZ	81349	RLR05C6041FR	RESISTOR (R2).....	1
35	XADZZ	81349	RLR05C6191FR	RESISTOR (R2).....	1
36	XADZZ	81349	RLR05C6341FR	RESISTOR (R2).....	1
37	XADZZ	81349	RLR05C6491FR	RESISTOR (R2).....	1
38	XADZZ	81349	RLR05C6651FR	RESISTOR (R2).....	1
39	XADZZ	81349	RLR05C6811FR	RESISTOR (R2).....	1
40	XADZZ	81349	RLR05C6981FR	RESISTOR (R2).....	1
41	XADZZ	81349	RLR05C7151FR	RESISTOR (R2).....	1
42	XADZZ	81349	RLR05C7321FR	RESISTOR (R2).....	1
43	XADZZ	81349	RLR05C7501FR	RESISTOR (R2).....	1
44	XADZZ	81349	RLR05C7681FR	RESISTOR (R2).....	1
45	XADZZ	81349	RLR05C7871FR	RESISTOR (R2).....	1
46	XADZZ	81349	RLR05C8061FR	RESISTOR (R2).....	1
47	XADZZ	81349	RLR05C8251FR	RESISTOR (R2).....	1
48	XADZZ	81349	RLR05C8451FR	RESISTOR (R2).....	1
49	XADZZ	81349	RLR05C8661FR	RESISTOR (R2).....	1
50	XADZZ	81349	RLR05C8871FR	RESISTOR (R2).....	1
51	XADZZ	81349	RLR05C9091FR	RESISTOR (R2).....	1
52	XADZZ	81349	RLR05C9311FR	RESISTOR (R2).....	1
				END OF FIGURE	

NOTE

Above SM&R codes are for the U.S. Marine Corps.

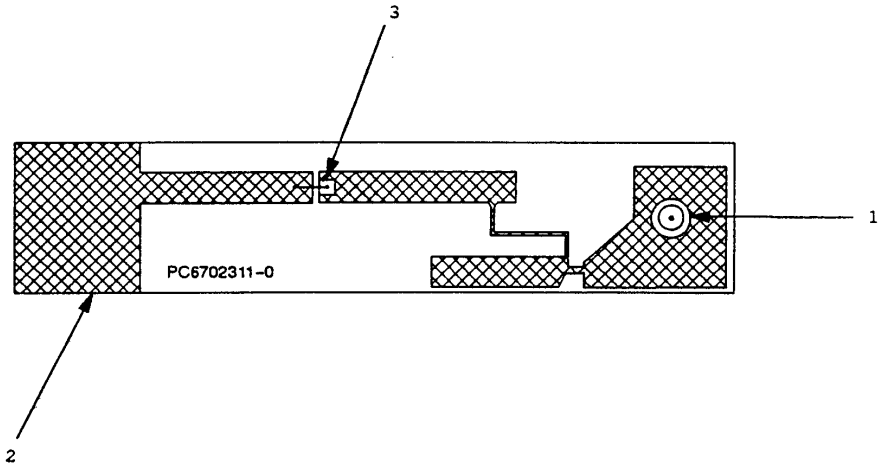

Figure C-26. RF CCA P/N AY6706677-0

Table C-26. RF CCA, P/N AY6706677-0

(1) ITEM NO.	(2) SM&R CODE	(3) CAGEC	(4) PART NUMBER	(5) DESCRIPTION AND USABLE ON CODES (UOC)	(6) QTY
				RF CCA (P/N AY6706677-0)	
1	PADZZ	81349	160-2085-01-01-0	STUD, TERMINAL	1
2	XADZZ	0WKM4	PC6702311-0	PWB	1
3	XAFZZ	16179	MA4P504-132	DIODE	1
				END OF FIGURE	

NOTE

Above SM&R codes are for the U.S. Marine Corps.

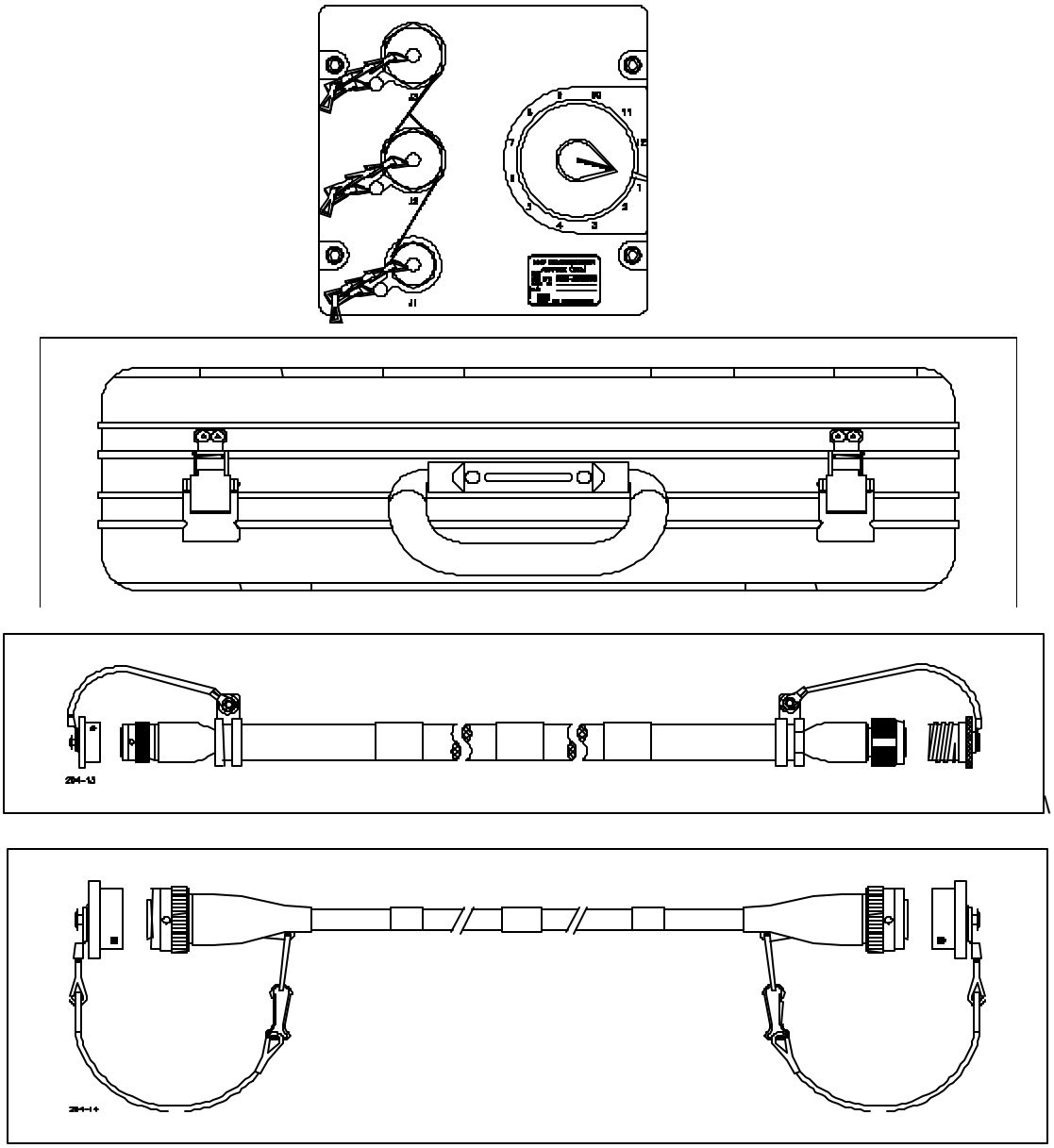

Figure C-27. Muzzle Communication Adapter, P/N :11838876

SECTION II TM9-1290-364-14&P

(1) ITEM NO	(2) SMR CODE	(3) NSN	(4) CAGEC	(5) PART NUMBER	(6) DESCRIPTION AND USABLE ON CODES(UOC)	(7) QTY
					GROUP 14 FIGURE C-27	
					ADAPTER COMMUNICATION (P/N 11838876)	
1	PAODD	1290014686533	19200	11838876	ADAPTER,COMMUNICATI..... BOI:1 PER 00000001 END ITEMS	1
2	PAODD	7035014686532	S7040	AY20412152	CONVERTER-STORER,SI.....	1
3	PAOFF	6150014685178	S7040	WA20410634	CABLE ASSEMBLY,SPEC.....	1
4	PAOFF	6150014685177	S7040	WA20412122	CABLE ASSEMBLY, SPECAIL	1
5	PAOZZ	1285014711010	S7040	PR20412169	CASE,FIRE CONTROL E.....	1
					END OF FIGURE	

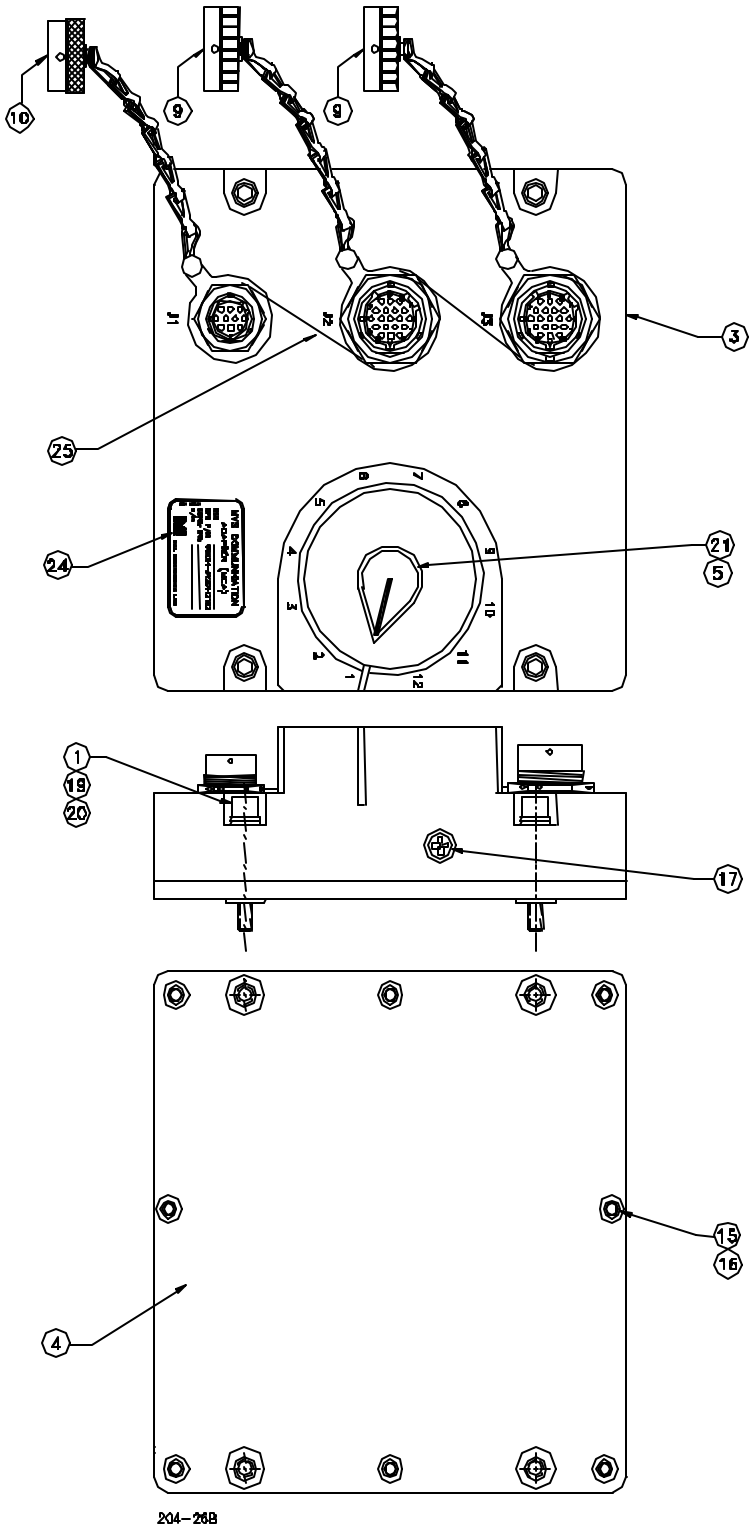

Figure C-28. MCA (Sheet 1 of 2)

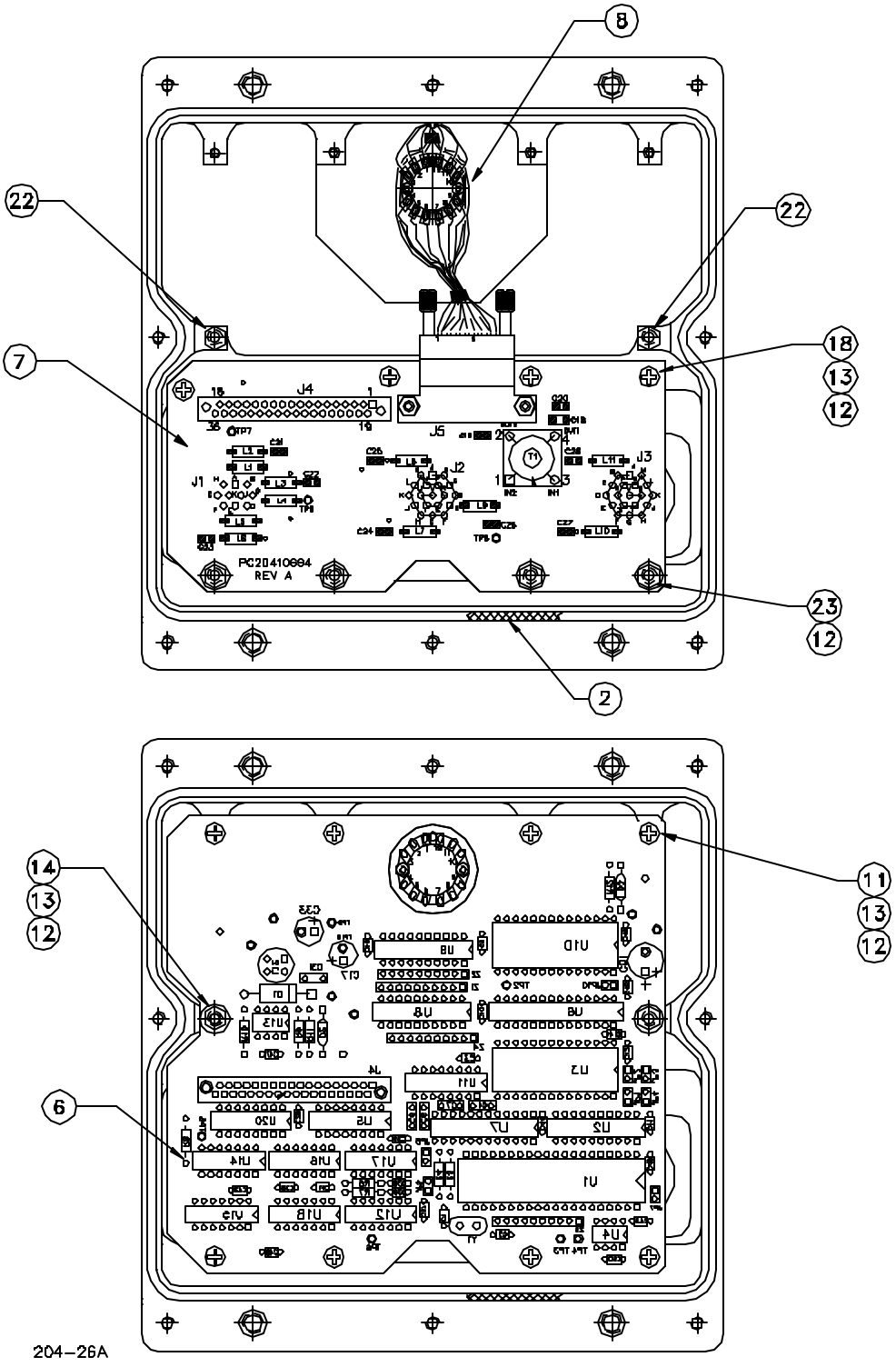

Figure C-28. MCA (Sheet 2 of 2)

MVS Communication Adapter AY20412152

SECTION II TM9-1290-364-14&P

(1) ITEM NO	(2) SMR CODE	(3) NSN	(4) CAGEC	(5) PART NUMBER	(6) DESCRIPTION AND USABLE ON CODES(UOC)	(7) QTY
					GROUP 15 FIGURE C-28	
					MCA (P/N AY20412152)	
1	PAFZZ	5305014782576	S7040	AM20410729	SCREW	4
2	PAFZZ	5331014779888	S7040	AM20410733	0-RING	1
3	XAFDD		S7040	AM20412173	HOUSING ASSEMBLY	1
4	XAFDD		S7040	AM20412174	COVER ASSEMBLY	1
5	PAFZZ	5310014779889	S7040	AM20413158	WASHER,KEY	1
6	PADDD	5998014785923	S7040	AY20412143	CIRCUIT CARD ASSEMB	1
7	PADDD	5915014794526	S7040	AY20412144	FILTER ASSEMBLY,ELE	1
8	PAFFZ	5930014786961	S7040	AY20412557	SWITCH ASSEMBLY	1
9	PAFZZ	5935011593319	96906	MS3181-14NA	COVER,ELECTRICAL CO	2
10	PAFZZ	5935011567879	96906	MS3181-12NA	COVER,ELECTRICAL CO	1
11	PAFZZ	5305000545648	96906	MS51957-14	SCREW,MACHINE	8
12	PAFZZ	5310000570573	80205	NAS620C4	WASHER,FLAT	18
13	PAFZZ	5310009338118	96906	MS35338-135	WASHER,LOCK	14
14	PAFZZ	5310002083786	80205	NAS671C4	NUT,PLAIN,HEXAGON	2
15	PAFZZ	5305009590382	80205	MS16995-17	SCREW,CAP,SOCKET HE	8
16	PAFZZ	5310000540041	80205	NAS620C6L	WASHER,FLAT	8
17	PAFZZ	5305008552989	80205	MS3212-31	SCREW,MACHINE	1
18	PAFZZ	5305000545647	96906	MS51957-13	SCREW,MACHINE	4
19	PAFZZ	5310009338121	96906	MS35338-139	WASHER,LOCK	4
21	PAFZZ	5355001516034	96906	MS91528-2T4B	KNOB	1
22	PAFZZ	5340014790483	S7040	MP20410757	STANDOFF,THREADED,S	1
23	PAFZZ	5340014798092	S7040	MP20412176	STANDOFF,THREADED,S	4
24	XDFZZ		S7040	NP20412158	PLATE, IDENTIFICATI	1
25	PAFZZ	9505002212650	96906	MS20995C20	WIRE,NONELECTRICAL	1
					END OF FIGURE	

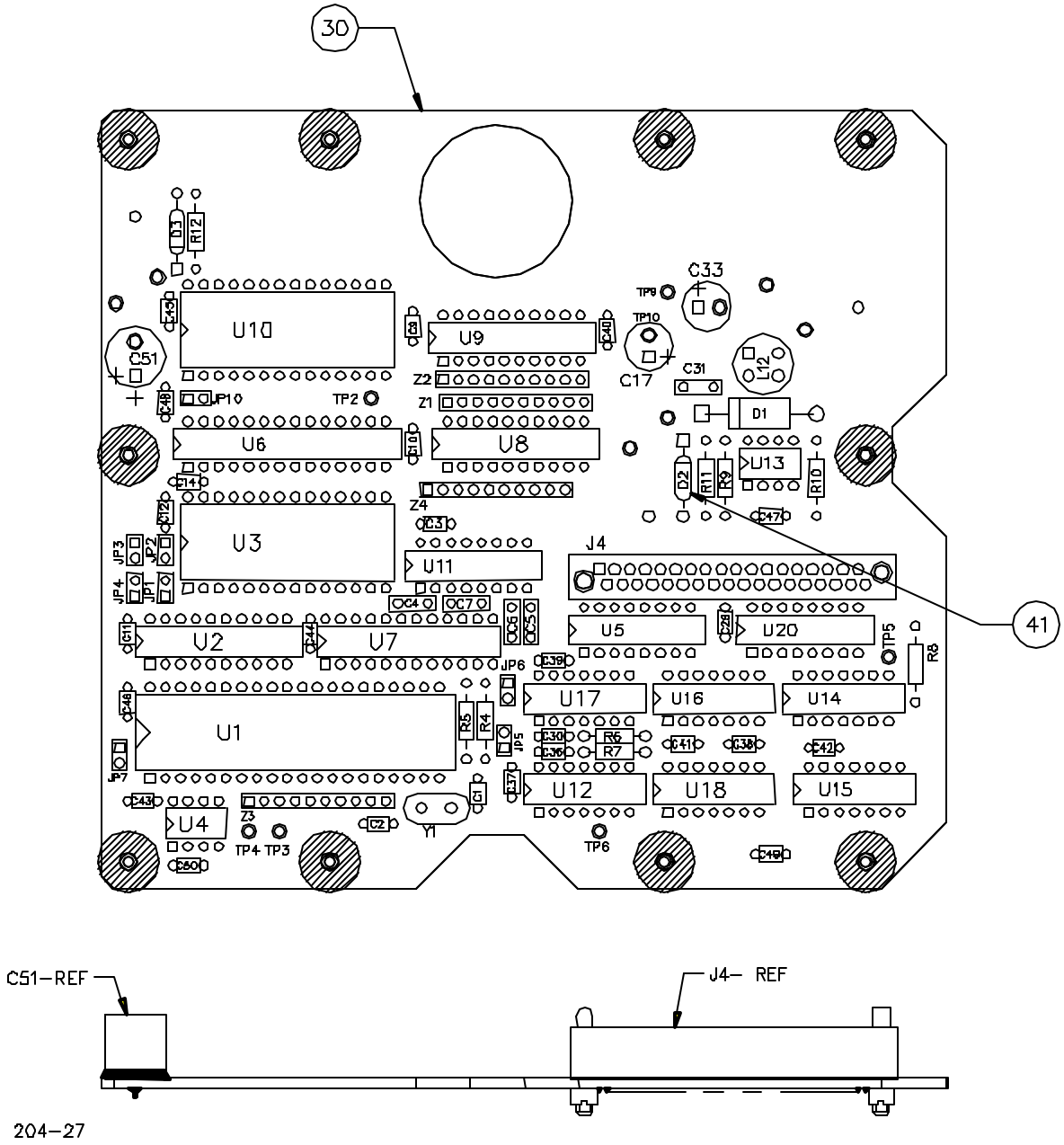

Figure C-29. CPU Card

LEGEND

REF. DES.	ITEM NO.	REF. DES.	ITEM NO.	REF. DES.	ITEM NO.
Y1	1	C47	3	Z3	36
C1	5	C48	3	Z4	36
C2	5	C49	3	R4	32
C3	3	C50	3	R5	32
C4	4	C51	7	R6	38
C5	4	D1	8	R7	39
C6	4	D3	9	R8	31
C7	4	J4	10	R9	35
C9	3	U1	14	R10	33
C10	3	U2	23	R11	34
C11	3	U3	12	R12	37
C12	3	U4	22	L12	40
C14	3	U5	17		
C17	6	U6	29		
C29	3	U7	13		
C30	2	U8	24		
C31	4	U9	24		
C33	6	U10	16		
C36	3	U11	15		
C37	3	U12	21		
C38	3	U13	28		
C39	3	U14	25		
C40	3	U15	26		
C41	3	U16	27		
C42	3	U17	20		
C43	3	U18	18		
C44	3	U20	19		
C45	3	Z1	36		
C46	3	Z2	36		

Figure C-29. CPU Card

Circuit Card Assembly CPU AY20412143

SECTION II TM9-1290-364-14&P

(1) ITEM NO	(2) SMR CODE	(3) NSN	(4) CAGEC	(5) PART NUMBER	(6) DESCRIPTION AND USABLE ON CODES(UOC)	(7) QTY
					GROUP 16 FIGURE C-29	
					CIRCUIT CARD ASSEMBLY (P/N AY20412143)	
1	XDDZZ		OPDX3	L108K	OSCILLATOR,CRYSTAL.....	1
2	PADZZ	5910013136581	81349	M39014/01-1575V	CAPACITOR,FIXED,CER.....	1
3	PADZZ	5910013120552	81349	M39014/01-1593V	CAPACITOR,FIXED,CER.....	22
4	PADZZ	5910013126651	81349	M39014/02-1419V	CAPACITOR,FIXED,CER.....	5
5	PADZZ	5910013138382	81349	M39014/01-1330V	CAPACITOR,FIXED,CER.....	2
6	PADZZ	5910014780850	S4091	10SA100K	CAPACITOR,FIXED,PLA.....	2
7	PADZZ	5910014780851	S4091	10SA220K	CAPACITOR,FIXED,PLA.....	2
8	PADZZ	5961011076773	80131	1N5822	SEMICONDUCTOR DEVIC.....	1
9	PADZZ	5961002789620	04713	1N4001	SEMICONDUCTOR DEVIC.....	1
10	PADZZ	5935010992620	10400	WTAX36SED9	CONNECTOR,RECEPTACL.....	1
11	PADZZ	5999011987077	58536	A-55485/06-010D	MOUNTING PAD,ELECTR.....	6
12	PADZZ	5962014782575	S7040	MC20410755	MICROCIRCUIT,MEMORY.....	1
13	PADZZ	5962014791970	S7040	MC20410756	MICROCIRCUIT.....	1
14	XDDZZ		34649	TD80C51FA1	MICROPROCESSOR.....	1
15	XDDZZ		24355	ADM232LAN	DRIVER, RS232.....	1
16	XDDZZ		29436	ID82C52	CONTROLLER, SERIAL.....	1
17	XDDZZ		1ES66	MAX691AEJE	MICROCIRCUIT, DIGIT.....	1
18	XDDZZ		OG3U3	M74HC393B1R	MICROCIRCUIT, DIGIT.....	1
19	XDDZZ		OG3U3	MH74C257B1R	MICROCIRCUIT,DIGITA.....	1
20	XDDZZ		OG3U3	M74HC11B1R	MICROCIRCUIT,DIGITA.....	1
21	XDDZZ		OG3U3	M74HC14B1R	MICROCIRCUIT,DIGITA.....	1
22	XDDZZ		60395	X24C08PI	MICROCIRCUIT,EEPROM.....	1
23	XDDZZ		OG3U3	M74HC373B1R	MICROCIRCUIT,DIGITA.....	1
24	XDDZZ		OG3U3	M74HC244B1R	MICROCIRCUIT,DIGITA.....	2
25	XDDZZ		OG3U3	M74HC74B1R	MICROCIRCUIT, DIGIT.....	1
26	XDDZZ		OG3U3	M74HC164B1R	MICROCIRCUIT,DIGITA.....	1
27	XDDZZ		OG3U3	M74HC86B1R	MICROCIRCUIT,DIGITA.....	1
28	PADZZ	5962014675726	64155	LT1172IN8	MICROCIRCUIT,DIGITA.....	1
29	XDDZZ		R2018	5HM3-65756K-9	MICROCIRCUIT,DIGITA.....	1
30	XADZZ		S7040	PC20410661	PRINTED WIRING BOAR.....	1
31	PADZZ	5905011511187	81349	RLR07C1003GS	RESISTOR,FIXED,FILM.....	1
32	PADZZ	5905004124049	81349	RNC55H4751FS	RESISTOR,FIXED,FILM.....	2
33	PADZZ	5905012668951	81349	RLR05C1241FS	RESISTOR,FIXED,FILM.....	1
34	PADZZ	5905010158085	81349	RLR05C1001FS	RESISTOR,FIXED,FILM.....	1
35	PADZZ	5905003239141	81349	RNC60K3741FS	RESISTOR,FIXED,FILM.....	1
36	PADZZ	5905011982492	81349	M8340109K1002FC	RESISTOR NETWORK,FI.....	4
37	PADZZ	5905011763873	81349	RLR05C1002GS	RESISTOR,FIXED,FILM.....	1
38	PADZZ	5905011767352	81349	RLR05C2702GS	RESISTOR,FIXED,FILM.....	1
39	PADZZ	5905011763872	81349	RLR05C1003GS	RESISTOR,FIXED,FILM.....	1
40	XDDZZ		R2017	8RCH110-220M	INDUCTOR.....	1
41	PADZZ	6145001604775	81348	QQW343S22S1T	WIRE,ELECTRICAL.....	1

END OF FIGURE

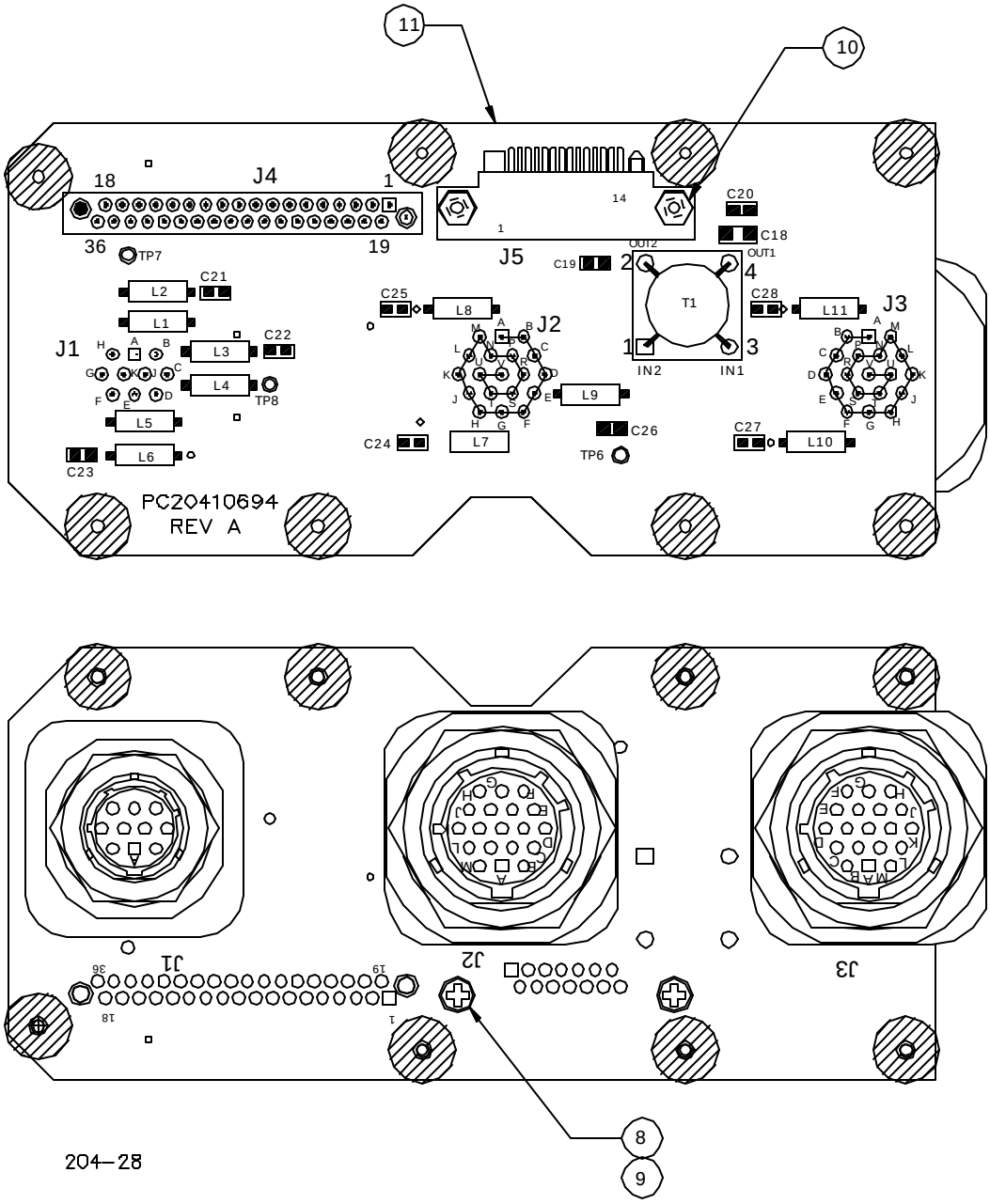

Figure C-30. EMI-Filter Card

LEGEND

REF. DES.	ITEM NO.	REF. DES.	ITEM NO.	REF. DES.	ITEM NO.
J1	7	C22	2	L3	12
J2	6	C23	2	L4	12
J3	5	C24	2	L5	12
J4	4	C25	2	L6	12
J5	3	C26	2	L7	12
C18	1	C27	2	L8	12
C19	2	C28	2	L9	12
C20	2	L1	12	L10	12
C21	2	L1	12	L11	12

Circuit Card Assembly EMI-FILTER AY20412144

SECTION II		TM9-1290-364-14&P				
(1) ITEM NO	(2) SMR CODE	(3) NSN	(4) CAGEC	(5) PART NUMBER	(6) DESCRIPTION AND USABLE ON CODES(UOC)	(7) QTY
					GROUP 17 FIGURE C-30	
					CIRCUIT CARD ASSEMBLY (P/N 20412144)	
1	XDDZZ		04222	12065C104JAT2A	CAPACITOR, FIXED.....	1
2	XDDZZ		R2002	7VJ0805Y103JXBMT	CAPACITOR, FIXED.....	1
3	PADZA	5935010586521	81349	M55302/61A14	CONNECTOR,RECEPTACL.....	1
4	PADZZ	5935012318260	81349	M55302/63-B36X	CONNECTOR,RECEPTACL.....	1
5	XDDZZ		59610	851-07A14-19P501	CONNECTOR, RECEPTAC.....	1
6	XDDZZ		59610	851-07A14-19S501 6	CONNECTOR, RECEPTAC.....	1
7	XDDZZ		59610	851-07A12-10S501 6	CONNECTOR, RECEPTAC.....	1
8	PADZZ	5305013435333	65597	915012-0015	SCREW,EXTERNALLY RE.....	1
9	PADZZ	5310000570573	80205	NAS620C4	WASHER,FLAT.....	2
10	PADZZ	5310002083786	80205	NAS671C4	NUT,PLAIN,HEXAGON.....	2
11	XADZZ		S7040	PC20410694	PRINTED WIRING BOAR.....	1
12	XDDZZ		56699	4330-030-3630	BEAD,SHIELDING,ELEC.....	11
13	XDDZZ		S7040	TH20410750	TRANSFORMER,ELECTRI.....	1

END OF FIGURE

Switch Assembly

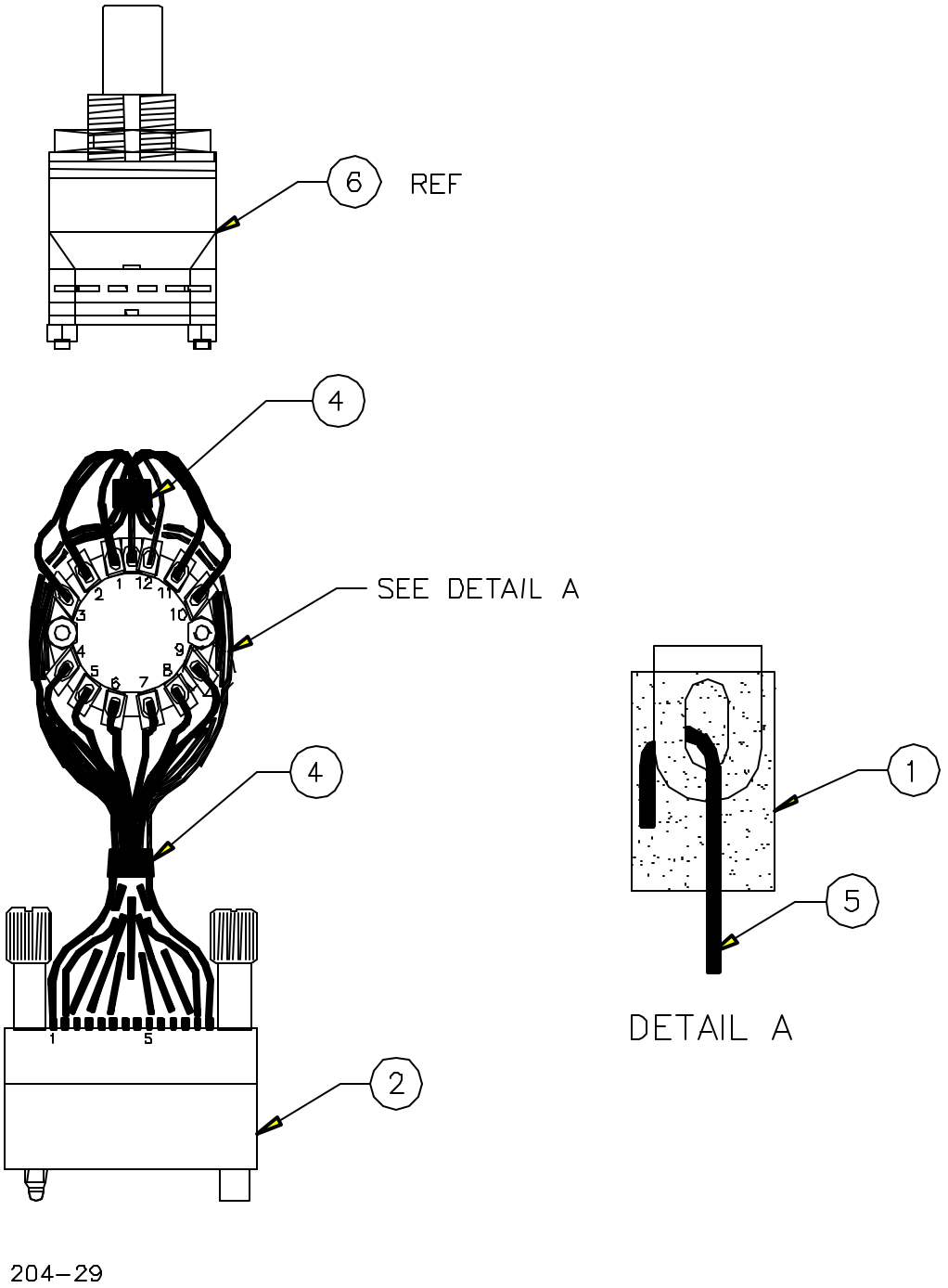

Figure C-31. Switch Assembly

Switch Assembly AY20412557

SECTION II TM9-1290-364-14&P

(1) ITEM NO	(2) SMR CODE	(3) NSN	(4) CAGEC	(5) PART NUMBER	(6) DESCRIPTION AND USABLE ON CODES(UOC)	(7) QTY
					GROUP 18 FIGURE C-31	
					SWITCH ASSEMBLY (P/N AY20412557)	
1	PAFZZ	5970013516799	81349	M23053/18-202-C	INSULATION SLEEVING.....	1
2	PAFZZ	5935014553428	0URH2	WTDXA14SAJT	CONNECTOR,RECEPTACL.....	1
3	PAFZA	3439001534280	81348	SN63WRMAP2 0.063	SOLDER,TIN ALLOY.....	1
4	PAFZZ	4020002312048	82110	18DR-FYR-LACE R	TAPE,LACING AND TYI.....	1
5	PAFZZ	6145011704658	81349	M22759/32-24-9	WIRE,ELECTRICAL.....	1
6	PAFZZ	5930014791971	81073	71BS30-01-1-12NF	SWITCH.....	1

END OF FIGURE

MCA-CCA Cable

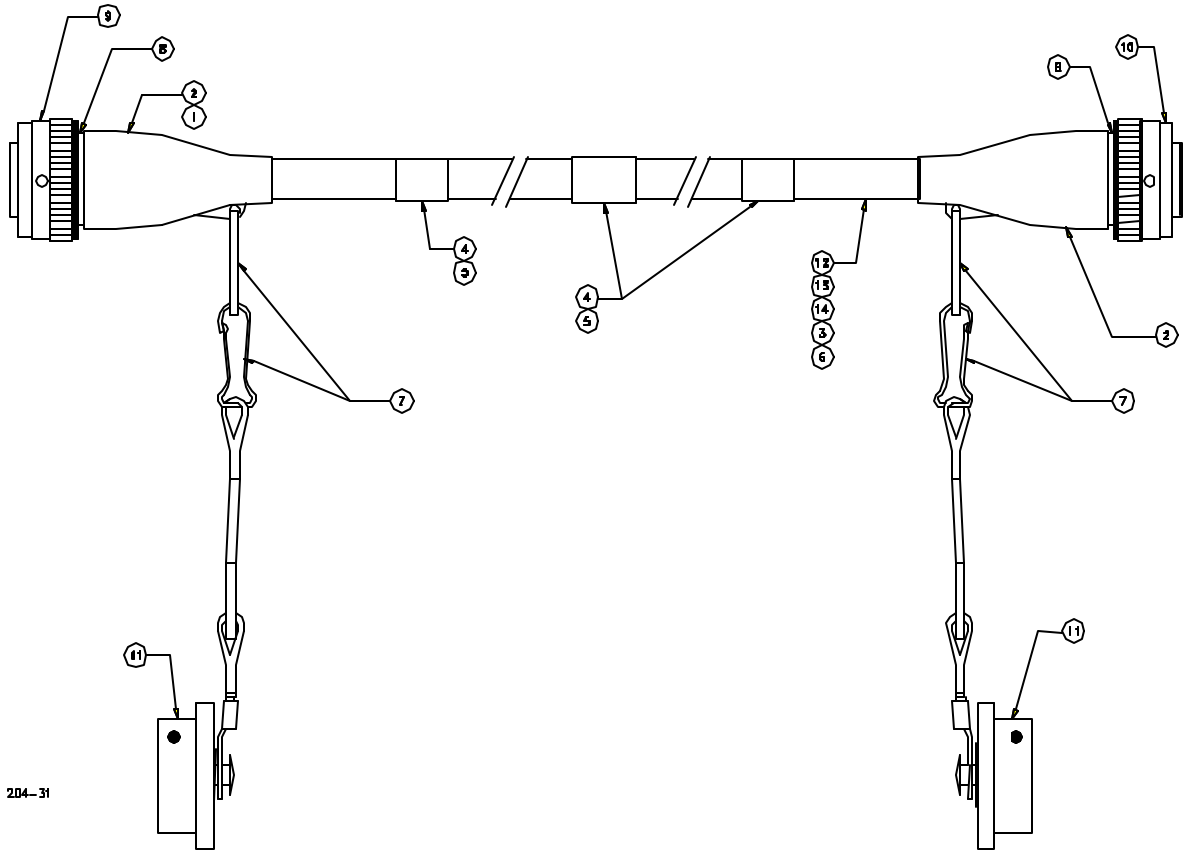

Figure C-32. MCA-CCA Cable

MCA – CCA Cable WA20412122

SECTION II TM9-1290-364-14&P

(1) ITEM NO	(2) SMR CODE	(3) NSN	(4) CAGEC	(5) PART NUMBER	(6) DESCRIPTION AND USABLE ON CODES(UOC)	(7) QTY
					GROUP 19 FIGURE C-32	
					MCA-CCA CABLE ASSEMBLY (P/N WA20412122)	
1	PAFZZ	5940011357077	81349	M83519/1-3	SPLICE,CONDUCTOR.....	1
2	PAFZZ	5970012725927	06090	202K142-25-01	INSULATION SLEEVING.....	2
3	PAFZZ	5970011766892	81349	M23053/16-003-0	INSULATION SLEEVING.....	1
4	PAFZA	5970013555982	06090	TMS-SCE-1/2-2.0-	INSULATION SLEEVING.....	3
5	PAFZZ	5970013514437	81349	M23053/18-208-C	INSULATION SLEEVING.....	1
6	PAFZZ	6145001949829	81348	QQB575R36T0375	BRAID,WIRE.....	1
7	PAFZZ	5340014791974	06090	000W212	CLIP.....	4
8	XDFZZ		R2013	595A1-14-07-1-C	BACKSHELL, CONNECTO.....	2
9	PAFZA	5935010784517	96906	MS3476W14-19S	CONNECTOR,PLUG,ELEC.....	2
10	PAFZA	5935011084483	96906	MS3476W14-19P	CONNECTOR,PLUG,ELEC.....	1
11	PAFZZ	5935011575854	96906	MS3180-14CA	COVER,ELECTRICAL CO.....	2
12	PAFZZ	6145014791975	06090	55A1131-22-2/4/6	CABLE.....	1
13	PAFZZ	6145011626049	81349	M22759/32-26-9	WIRE,ELECTRICAL.....	1
14	PAFZZ	6145011695661	81349	M22759/32-20-9	WIRE,ELECTRICAL.....	1

END OF FIGURE

MCA-MVS Cable

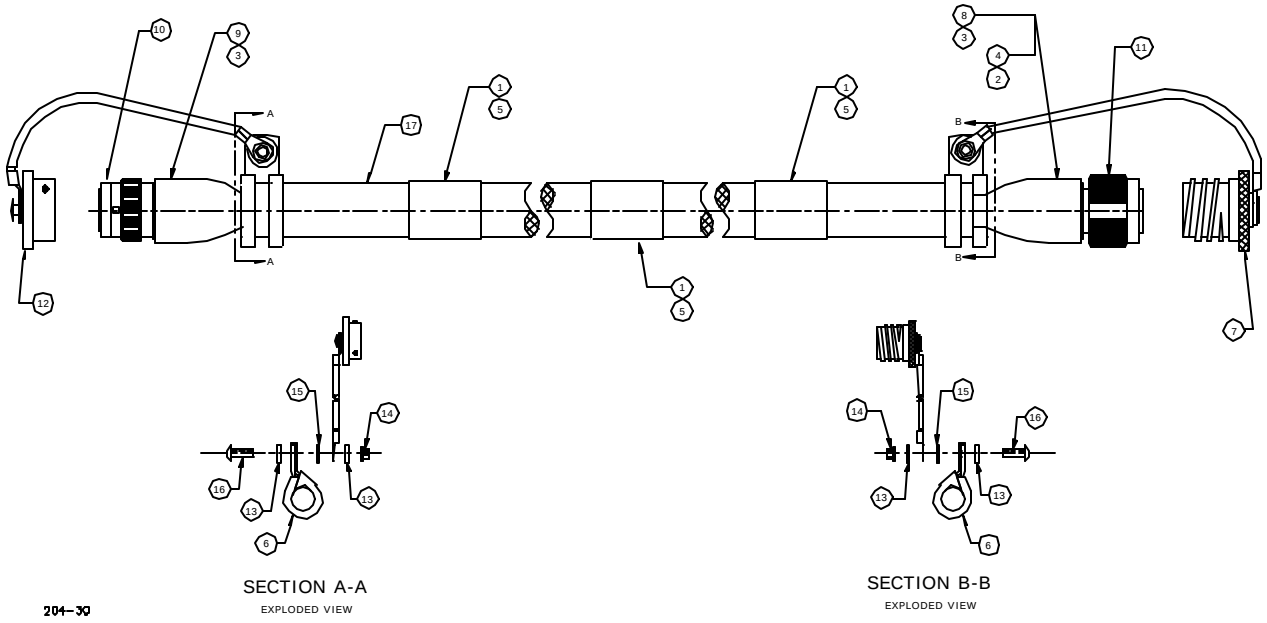

Figure C-33. MCA-MVS Cable

MCA – MVS Cable WA20410634

SECTION II TM9-1290-364-14&P

(1) ITEM NO	(2) SMR CODE	(3) NSN	(4) CAGEC	(5) PART NUMBER	(6) DESCRIPTION AND USABLE ON CODES(UOC)	(7) QTY
					GROUP 20 FIGURE C-33	
					MCA-MVS CABLE ASSEMBLY (P/N WA20410634)	
1	PAFZZ	5970014487273	06090	TMS-SCE-3/8-2.0-	INSULATION SLEEVING.....	1
2	PAFZZ	5940011357076	81349	M83519/1-1	SPLICE,CONDUCTOR.....	6
3	PAFZZ	5970014087742	06090	202D132-25	INSULATION SLEEVING.....	2
4	PAFZZ	5970013353136	81349	M23053/18-204C	INSULATION SLEEVING.....	1
5	PAFZZ	5970013516801	81349	M23053/18-207-C	INSULATION SLEEVING.....	1
6	PAFZZ	5340002008559	96906	MS21919WDG7	CLAMP,LOOP.....	2
7	PAFZZ	5935013870125	81349	D38999/32W13R	COVER,ELECTRICAL CO.....	1
8	PAFZZ	5935014793044	06090	209M312-19B	ADAPTER.....	1
9	PAFZZ	5935012333416	81349	M85049/60-2G12W	ADAPTER,CABLE CLAMP.....	1
10	PAFZZ	5935011078811	96906	MS3476W12-10P	CONNECTOR,PLUG,ELEC.....	1
11	PAFZA	5935011655268	81349	D38999/26WC35SN	CONNECTOR,PLUG,ELEC.....	1
12	PAFZZ	5935013618884	96906	MS3180-12RAL	COVER,ELECTRICAL CO.....	1
13	PAFZZ	5310000695291	80205	NAS620C8	WASHER,FLAT.....	4
14	PAFZZ	5310008071473	80205	MS21042L08	NUT,SELF-LOCKING,EX.....	2
15	PAFZZ	5310001384315	96906	MS51859-5	WASHER,FLAT.....	2
16	PAFZZ	5305000546669	96906	MS51957-44	SCREW,MACHINE.....	2
17	PAFZZ	6145014439994	06090	EPD52416A	CABLE,SPECIAL PURPO.....	1

END OF FIGURE

SECTION II TM9-1290-364-14&P

(1) ITEM NO	(2) SMR CODE	(3) NSN	(4) CAGEC	(5) PART NUMBER	(6) DESCRIPTION AND USABLE ON CODES(UOC)	(7) QTY
					GROUP 9999 FIGURE BULK	
					COMMON AND BULK ITEMS	
1	PADZZ	6145011356836	81349	M27500-22SB2T23	.CABLE,SPECIAL PURPO.....	1
2	PADZZ	5970008370647	81349	M22129-22-N	INSULATION SLEEVING.....	1
3	XDDZZ		34335	AM27C256-55DC	MICROCIRCUIT,DIGITA.....	1
4	PAFZZ	5999012801460	18565	10-04-1720-1215	.SHIELDING GASKET,EL.....	1
5	PAFZZ	4020000851002	58536	AA52080-B-5	TAPE,LACING AND TYI.....	1
6	PADZA	6145009394955	81349	M22759/11-20-0	.WIRE,ELECTRICAL.....	1
7	PADZZ	9505002212650	96906	MS20995C20	WIRE,NONELECTRICAL.....	1

END OF FIGURE

SECTION III.

SPECIAL SUPPORT EQUIPMENT

Figure **Title** **Page**

Special Support Equipment C-144

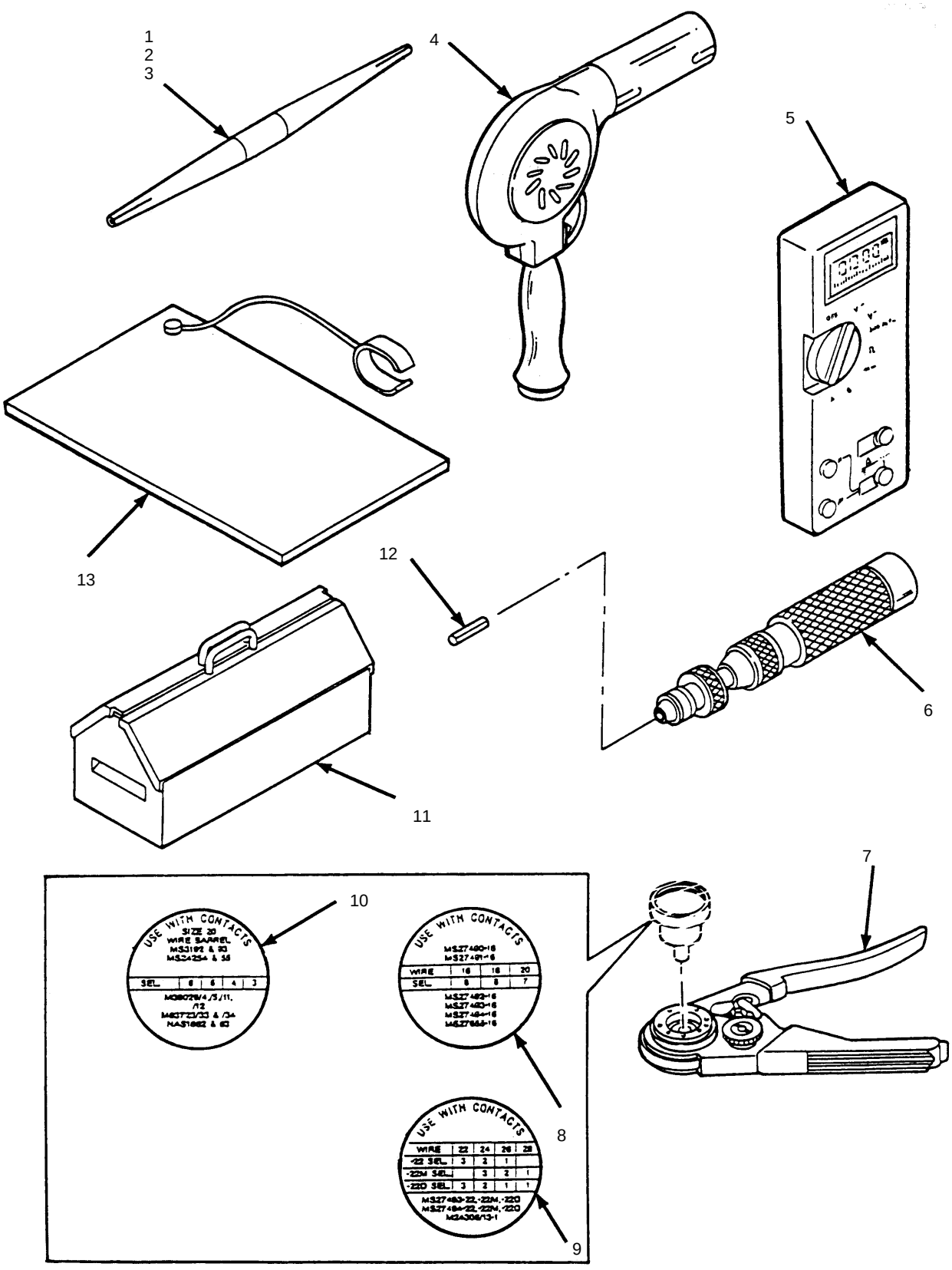

Figure C-34 . Special Support Equipment (Sheet 1 of 10)

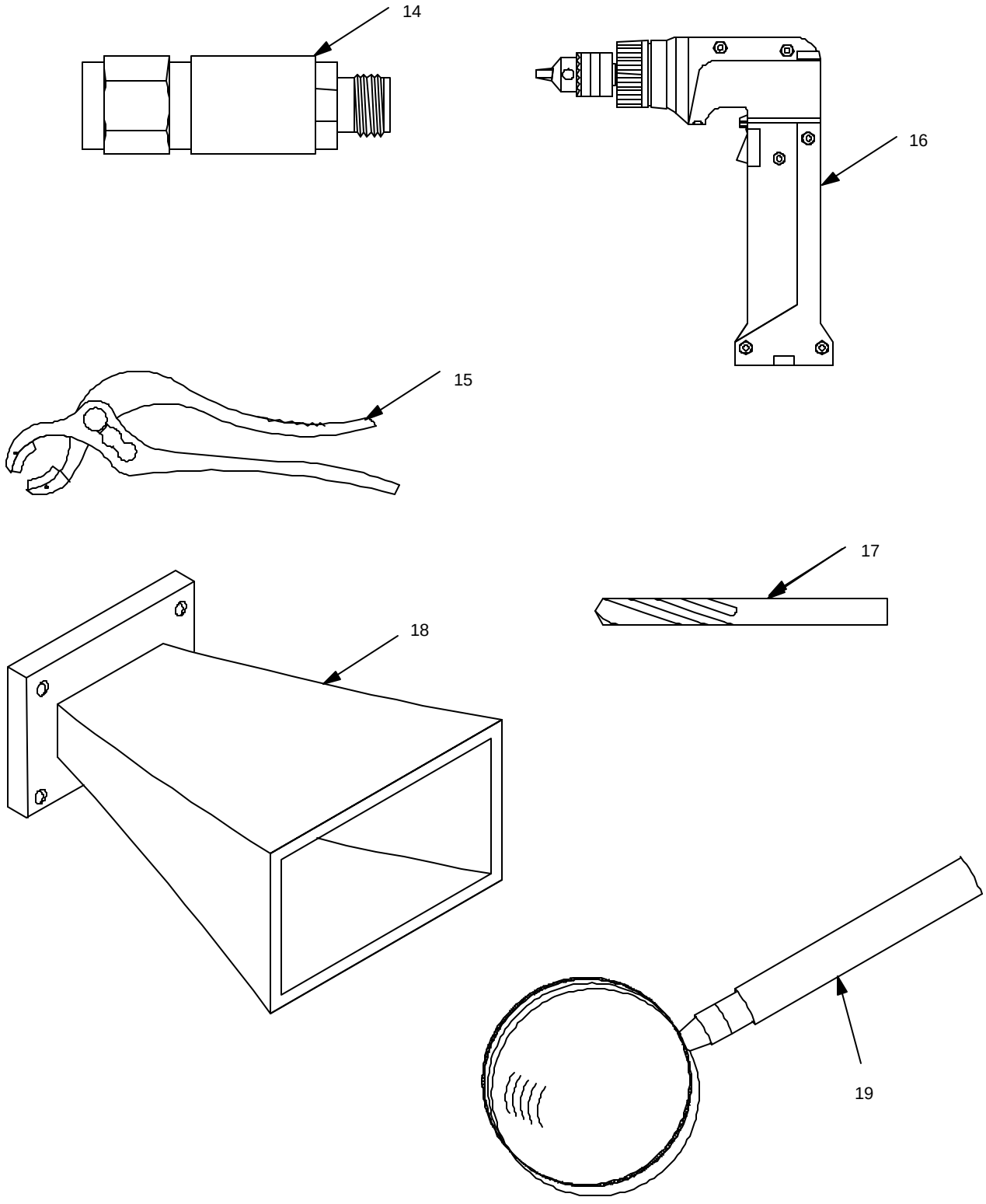

Figure C-34. Special Support Equipment (Sheet 2 of 10)

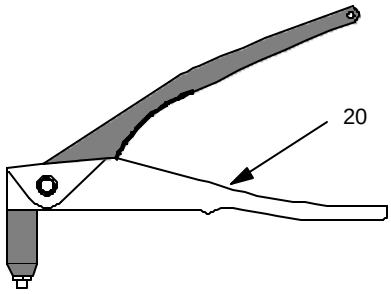

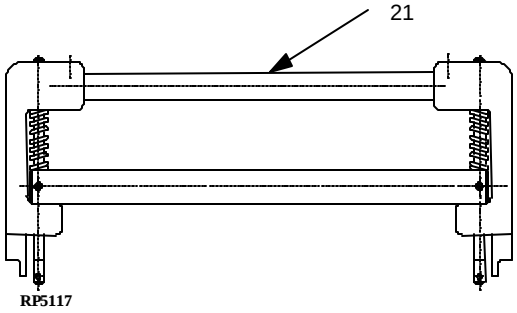

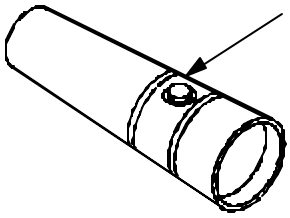

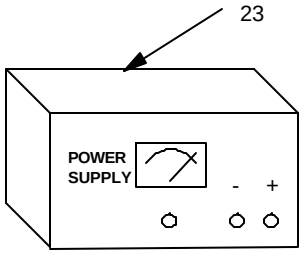

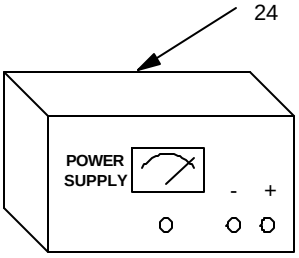

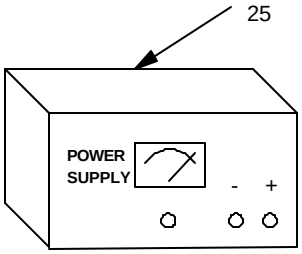

Figure C-34. Special Support Equipment (Sheet 3 of 10)

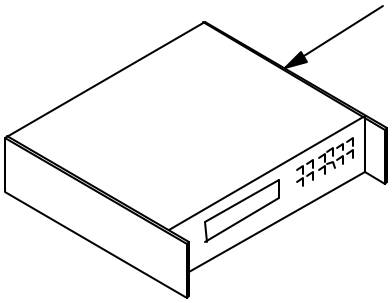

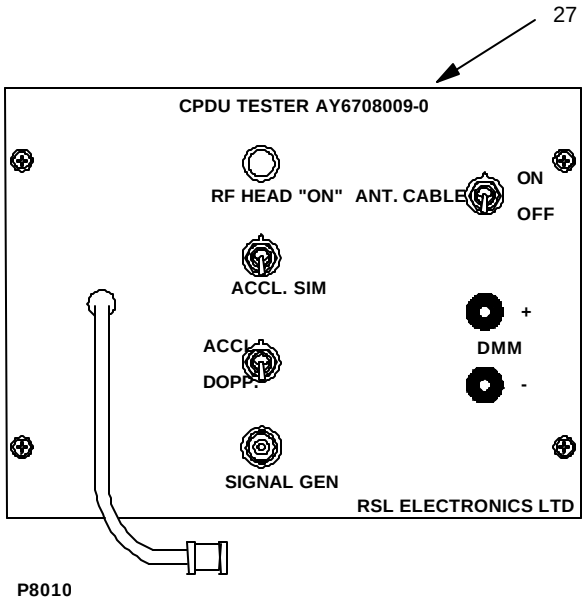

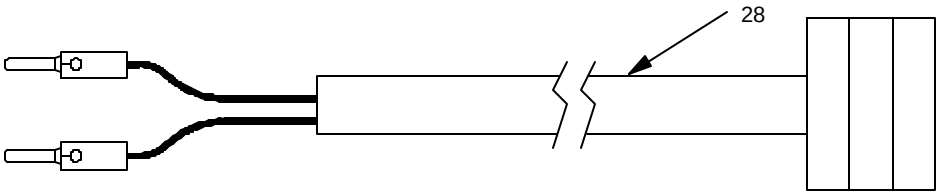

Figure C-34 Special Support Equipment (Sheet 4 of 10)

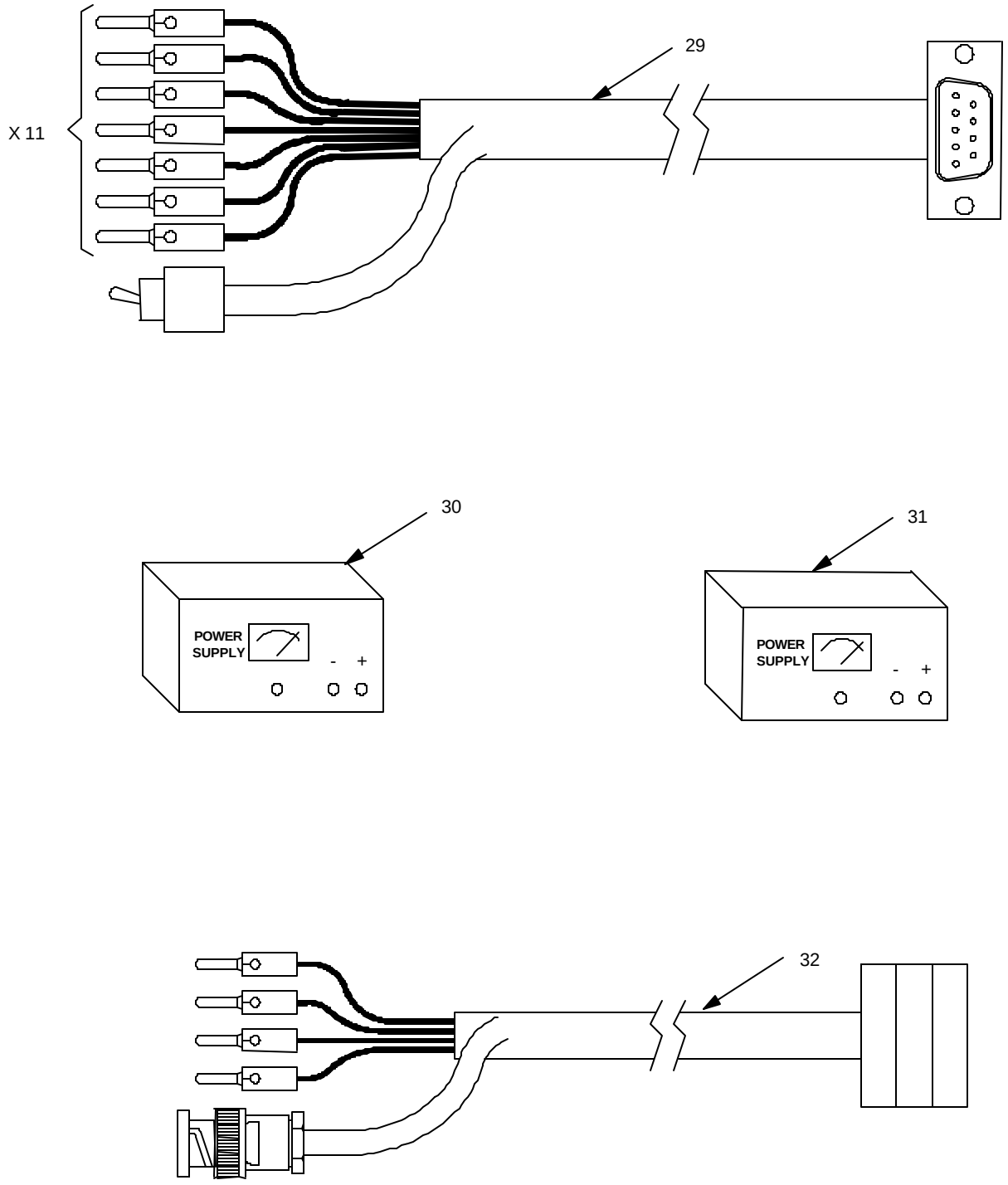

Figure C-34. Special Support Equipment (Sheet 5 of 10)

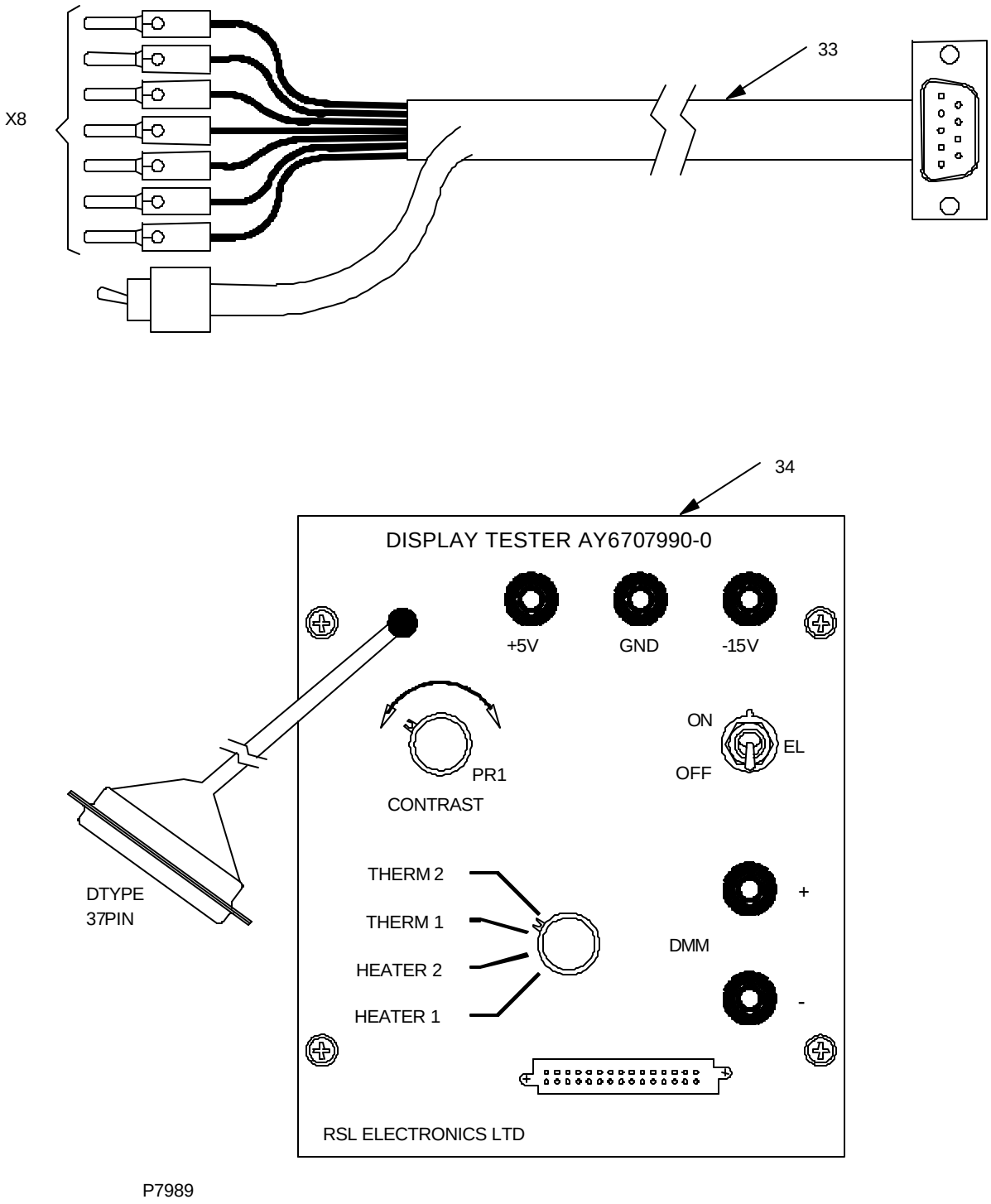

Figure C-34. Special Support Equipment (Sheet 6 of 10)

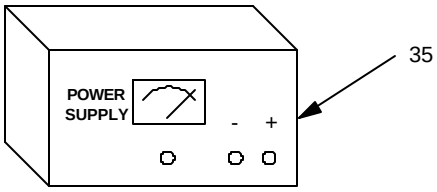

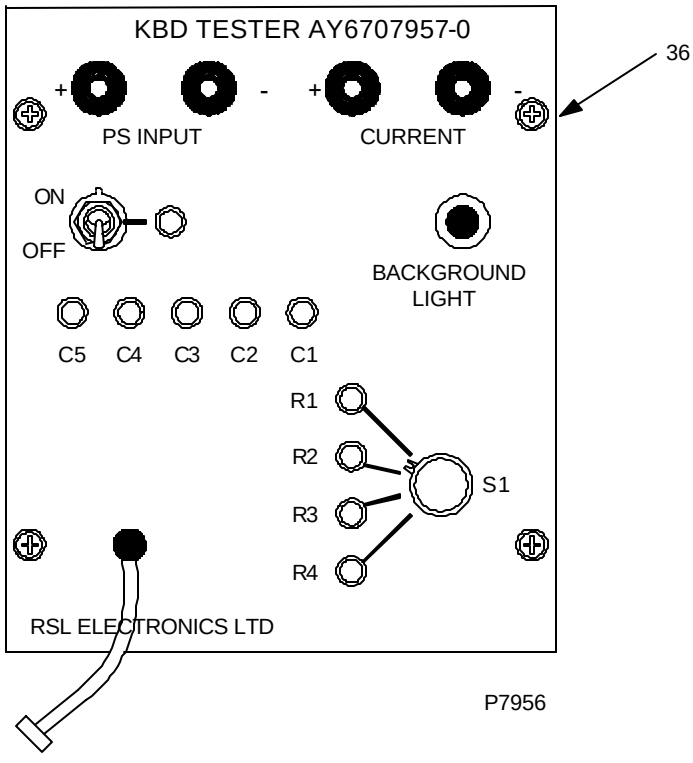

Figure C-34. Special Support Equipment (Sheet 7 of 10)

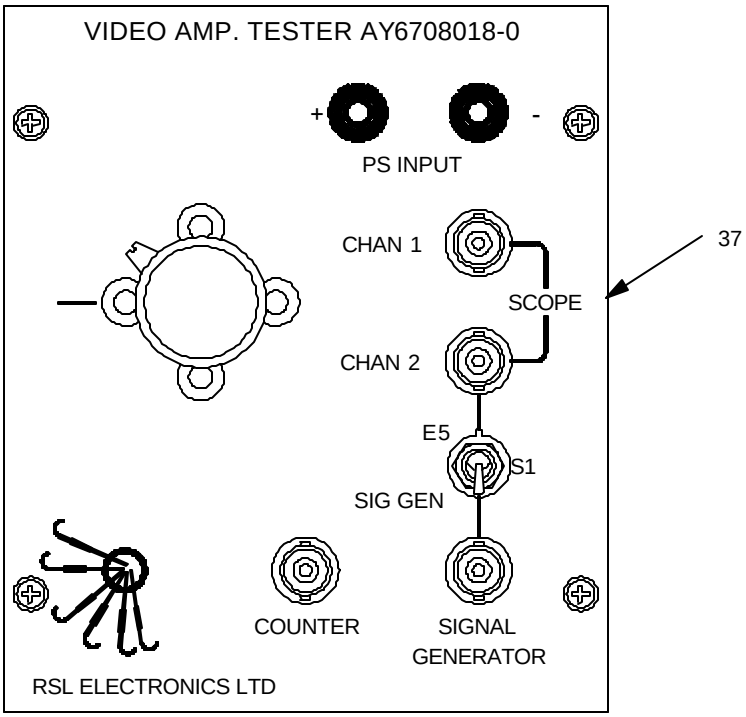

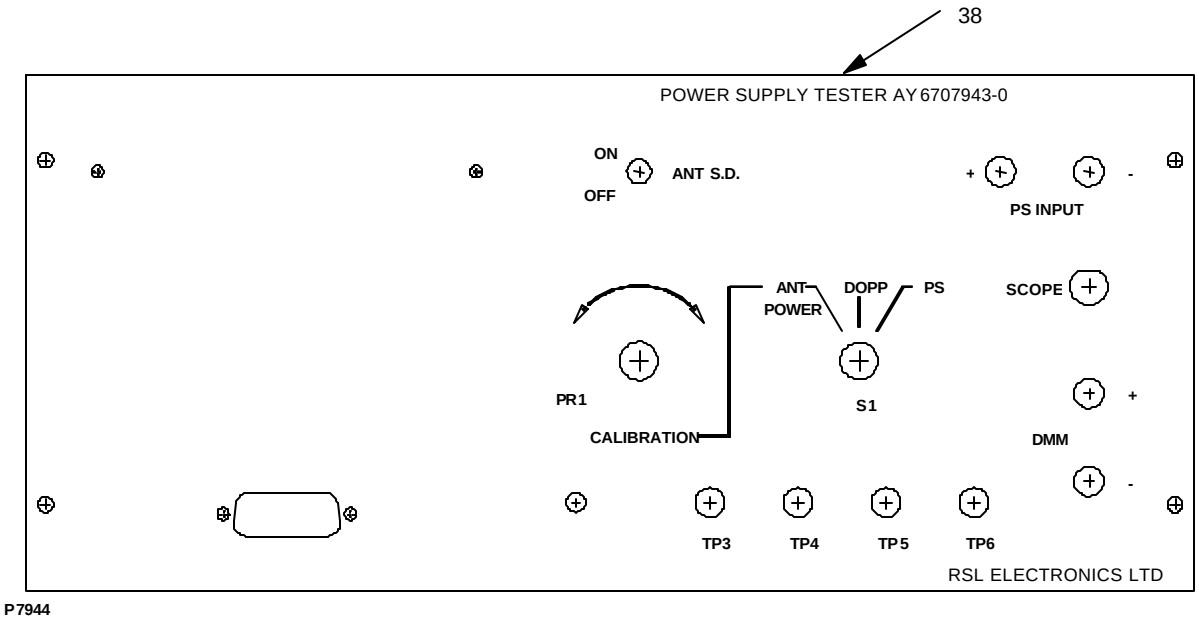

Figure. C-34 Special Support Equipment (Sheet 8 of 10)

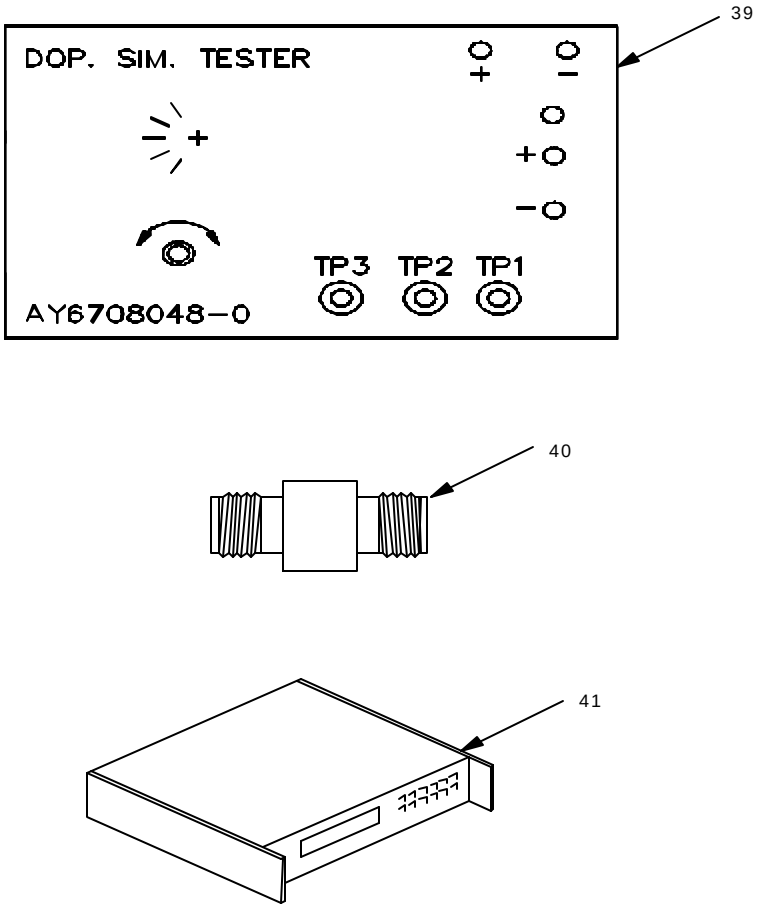

Figure C-34 . Special Support Equipment (Sheet 9 of 10)

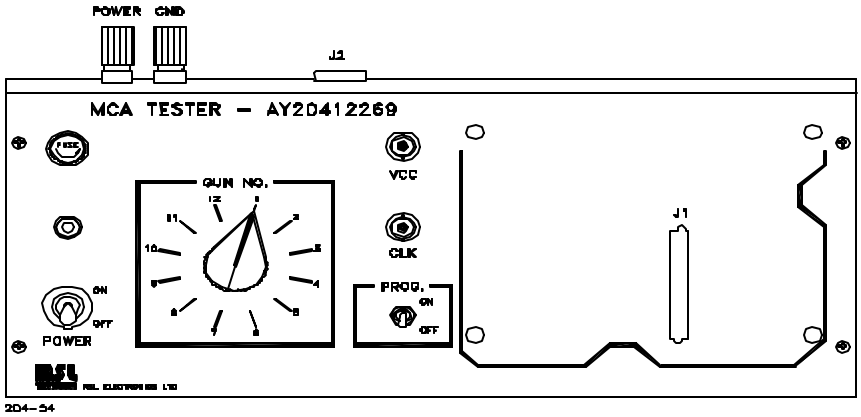

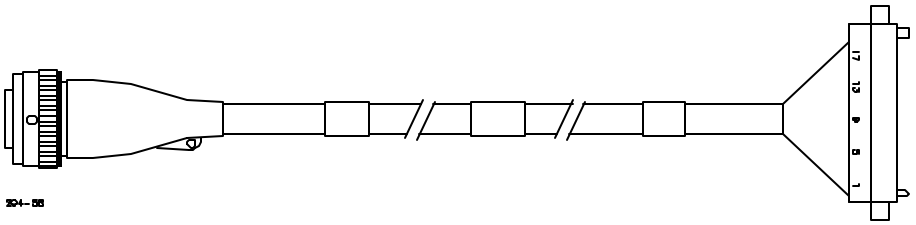

Table C-34. Special Support Equipment (Sheet 10 of 10

Table C-34 Special Support Equipment

SECTION III TM9-1290-364-14&P

(1) ITEM NO	(2) SMR CODE	(3) NSN	(4) CAGEC	(5) PART NUMBER	(6) DESCRIPTION AND USABLE ON CODES(UOC)	(7) QTY
					GROUP 9500 FIGURE C-34	
					SPECIAL TOOLS	
1	PEFZZ	5120000180575	81349	M81969/14-01	INSERTER AND REMOVE.....	
2	PEFZZ	5120009154587	81349	M81969/14-11	INSERTER AND REMOVE.....	
3	PEFZZ	5120009154588	81349	M81969/14-03	INSERTER AND REMOVE.....	
4	PEFZZ	4940012784142	83284	10008	HEAT GUN,ELECTRIC.....	
5	PEFDD	6625011686856	89536	77-2	MULTIMETER.....	
6	PEFZZ	5120009318361	96508	TS30	WRENCH,TORQUE.....	
7	PEFZZ	5120001653912	81349	M22520/1-01	CRIMPING TOOL,TERMI.....	
8	PEFZZ	5120000167582	81349	M22520/1-04	CRIMPING TOOL,TERMI.....	
9	PEFZZ	5120001325039	81349	M22520/1-09	CONTACT POSITIONER,.....	
10	PEFZZ	5120000166382	81349	M22520/1-02	CRIMPING TOOL,TERMI.....	
11	PEFZA	5180006050079	80063	PPL863	TOOL KIT,ELECTRONIC.....	
13	PEFZZ	4940012504236	81349	M87893-02	WORK STATION KIT,EL.....	
14	PEFZZ	5985012080919	12436	V00154-004	ATTENUATOR,FIXED.....	
15	XDFZZ		55719	PWC52A	PLIERS,SLIP JOINT.....	
16	PEFZZ	5130009357354	55111	6635	DRILL,ELECTRIC,PORT.....	
18	PEFZZ	5985007291297	99899	640	HORN,WAVEGUIDE.....	
19	XDFZZ		81349	GGG391	MAGNIFIER.....	
20	PEFZZ	5120012894310	10054	HP-2	RIVETER,BLIND,HAND.....	
21	PEFZZ	5998014336595	S7040	AY9805117-0	EXTRACTOR,ELECTRICA.....	
22	PAOZF	6625014171872	S7040	AY6706690-0	SIMULATOR,RADAR SIG.....	
24	PEFZZ	6130013568001	80103	LLS-9040	POWER SUPPLY.....	
25	PEFZZ	6130014484889	80103	LLS-6040	POWER SUPPLY.....	
26	XDFZZ		28480	5350B	COUNTER,ELECTRONIC.....	
27	PEFZZ	6625014362305	S7040	AY6708009-0	CONTROL PANEL,TEST.....	
28	PEOFF	6145014354416	S7040	WA6709092-0	CABLE,POWER,CPDU.....	
29	PEFZZ	6145014521254	S7040	WA6709094-0	CABLE,POWER,ELECTRI.....	
30	PEFZZ	6130004770549	80103	LK342AFM	POWER SUPPLY.....	
31	PEFZZ	6130014484893	80103	LLS-5018	POWER SUPPLY.....	
32	PEFZZ	6625014484908	S7040	WA6709098-0	LEAD SET,TEST.....	
33	PEFZZ	6625014484907	S7040	WA6709097-0	LEAD SET,TEST.....	
34	PEFZZ	1290014524605	S7040	AY6707990-0	TESTER,DISPLAY.....	
35	PEFZZ	6130014484894	80103	LLS-5040	POWER SUPPLY.....	
36	PEFZZ	6625014362310	S7040	AY6707957-0	CONTROL PANEL,TEST.....	
37	PEFZZ	6625014484888	S7040	AY6708018-0	TEST SET,VIDEO SIGN.....	
38	PEFZZ	6625014484890	S7040	AY6707943-0	TEST SET,POWER SUPP.....	
39	PEDZZ	6625014484892	S7040	AY6708048-0	TEST SET,DOPPLER SI.....	
40	XDFZZ	5950009314014	80249	890664	TRANSFORMER,AUDIO F.....	
41	XDFZZ		23338	178	GENERATOR,FUNCTION,.....	
42	PEFZZ	6625011761269	89536	PM6680/011	COUNTER,ELECTRONIC,.....	
43	PEFDD	6625011719937	28480	3478A	MULTIMETER.....	
44	PEFZZ	6625014484891	28480	1070B	OSCILLOSCOPE.....	
45	XDFZZ	6625008688334	80058	ME-162/U	WATTMETER.....	
46	PEFZZ	7020013378640	28480	HPVECTRAES12	COMPUTER,PERSONAL.....	
48	PEFZZ	5120013677652	50893	31335	WRENCH,STRAP.....	
49	PEFZF	6150014309512	S7040	WA6708180-0	CABLE ASSEMBLY,SPEC.....	
50	PEFZZ	6150014689384	S7040	WA20413064	CABLE ASSEMBLY,SPEC.....	
51	PEFZZ		S7040	WA6708147-0	CABLE ASSEMBLY.....	
52	PEFZZ	6625014791973	S7040	AY20412269	TEST SET.....	
53	PEFZZ	6145014791972	S7040	WA20412280	CABLE.....	

END OF FIGURE

C-34-1

SECTION V TM9-1290-364-14&P

CROSS-REFERENCE INDEXES

NATIONAL STOCK NUMBER INDEX

STOCK NUMBER	FIG.	ITEM	STOCK NUMBER	FIG.	ITEM
5910-00-010-8666	C-10	4	5305-00-066-7326	C-2	14
	C-12	4	5310-00-069-5291	C-2	17
5910-00-010-8718	C-14	2		C-16	7
5910-00-010-8721	C-10	2		C-17	7
	C-12	6		C-18	7
	C-14	4		C-33	13
5120-00-016-6382	C-34	10	5970-00-082-3942	C-9	7
5120-00-016-7582	C-34	8		C-11	35
5120-00-018-0575	C-34	1	4020-00-085-1002	BULK	5
5961-00-022-5669	C-12	15	5910-00-099-0569	C-11	40
5950-00-035-4425	C-10	44	5910-00-113-5286	C-12	9
5310-00-043-4708	C-6	67	5910-00-113-5465	C-12	7
	C-11	13	5910-00-113-5499	C-14	6
5310-00-054-0041	C-28	16	5940-00-113-9828	C-7	2
5305-00-054-5637	C-11	11		C-14	48
5305-00-054-5639	C-6	77	5320-00-117-6929	C-10	131
5305-00-054-5641	C-6	66	5905-00-121-9919	C-6	32
5305-00-054-5646	C-11	28	5120-00-132-5039	C-34	9
5305-00-054-5647	C-3	7	5905-00-138-3376	C-14	39
	C-11	20	5310-00-138-4315	C-16	8
	C-28	18		C-17	8
5305-00-054-5648	C-7	13		C-18	8
	C-10	127		C-33	15
	C-18	13	6145-00-144-0231	C-13	11
	C-19	3	5940-00-144-1622	C-11	39
	C-28	11	3439-00-153-4280	C-31	3
5305-00-054-5649	C-4	8	6145-00-160-4775	C-10	136
	C-5	3		C-29	41
	C-6	64	5905-00-164-1726	C-14	18
	C-11	5	5120-00-165-3912	C-34	7
	C-14	56	5961-00-172-4970	C-14	7
5305-00-054-5650	C-10	128	6145-00-194-9829	C-32	6
5305-00-054-5652	C-3	14	5340-00-200-8559	C-16	9
5305-00-054-6651	C-2	9		C-33	6
5305-00-054-6652	C-2	12	5905-00-203-1478	C-14	16
5305-00-054-6654	C-11	41	5310-00-208-3786	C-4	6
5305-00-054-6669	C-15	8		C-5	5
	C-16	10		C-13	8
	C-17	10		C-14	51
	C-18	10		C-28	14
	C-33	16		C-30	10
5305-00-054-6670	C-11	16	5905-00-208-3953	C-14	21
5305-00-056-9961	C-13	4	9505-00-221-2650	BULK	7
5310-00-057-0573	C-3	8		C-28	25
	C-5	4	5305-00-225-6400	C-4	3
	C-6	63	4020-00-231-2048	C-31	4
	C-11	7	5315-00-234-1864	C-15	2
	C-28	12	5320-00-243-8356	C-14	55
	C-30	9	5905-00-270-2753	C-14	40
5305-00-066-7325	C-2	20	5961-00-278-9620	C-29	9

SECTION IV TM9-1290-364-14&P

CROSS-REFERENCE INDEXES

NATIONAL STOCK NUMBER INDEX

STOCK NUMBER	FIG.	ITEM	STOCK NUMBER	FIG.	ITEM
5905-00-285-1997	C-14	19	4820-00-760-6830	C-20	9
5340-00-291-5347	C-17	9	5355-00-762-1489	C-3	5
	C-18	9	5305-00-763-6009	C-4	10
5905-00-292-0981	C-14	15	5310-00-773-7624	C-2	10
5905-00-305-5252	C-14	22	5305-00-780-8454	C-13	3
5905-00-305-6126	C-14	25	5310-00-781-9483	C-11	4
5910-00-305-9515	C-12	11	5340-00-782-8737	C-3	16
5905-00-323-9141	C-29	35		C-11	30
5961-00-403-3298	C-10	21		C-11	38
5905-00-412-4049	C-29	32	5310-00-807-1473	C-16	6
5961-00-426-9613	C-14	10		C-17	6
5905-00-432-0376	C-14	24		C-18	6
5961-00-458-6778	C-10	38		C-33	14
5961-00-472-0086	C-10	40	5310-00-810-7785	C-19	6
5905-00-476-4668	C-14	17	5310-00-811-6419	C-10	132
5905-00-476-4679	C-14	26	5310-00-812-4294	C-6	68
5905-00-476-4680	C-14	27	5970-00-837-0647	BULK	2
5905-00-476-4681	C-14	28		C-10	137
5905-00-476-4682	C-14	29	5305-00-855-2989	C-3	4
5905-00-476-4683	C-14	30		C-11	44
5905-00-476-4684	C-14	31		C-28	17
5905-00-476-4685	C-14	32	5961-00-858-3826	C-6	17
5905-00-476-4686	C-14	33		C-10	54
5905-00-476-4687	C-14	34	5961-00-862-8738	C-10	56
5905-00-476-4689	C-14	35	5970-00-871-5779	C-16	12
5905-00-476-4691	C-14	36		C-17	12
5905-00-476-4695	C-14	37		C-18	16
5905-00-476-4696	C-14	38	5310-00-880-5975	C-15	10
6130-00-477-0549	C-34	30	5120-00-915-4587	C-34	2
5935-00-490-5220	C-11	22	5120-00-915-4588	C-34	3
5910-00-495-0042	C-12	1	5310-00-928-2690	C-6	65
5940-00-557-1629	C-7	3		C-11	12
5961-00-584-4527	C-6	10	5310-00-929-6395	C-11	42
	C-10	22	5310-00-933-8118	C-3	9
	C-12	12		C-4	5
	C-14	9		C-11	6
5180-00-605-0079	C-34	11		C-13	7
5940-00-682-2477	C-11	29		C-14	50
5310-00-685-3744	C-11	18		C-18	14
5310-00-723-9676	C-4	4		C-19	5
	C-7	14		C-28	13
	C-10	129	5310-00-933-8119	C-2	16
	C-13	6		C-11	17
	C-14	49		C-15	9
	C-18	15	5310-00-933-8120	C-11	3
	C-19	4	5310-00-933-8121	C-1	12
5985-00-729-1297	C-34	18		C-28	19
5970-00-740-2971	C-22	4	5130-00-935-7354	C-34	16
4020-00-753-6555	C-9	9	6145-00-939-4955	BULK	6
5905-00-758-3112	C-14	23		C-11	32

SECTION IV TM9-1290-364-14&P

CROSS-REFERENCE INDEXES

NATIONAL STOCK NUMBER INDEX

STOCK NUMBER	FIG.	ITEM	STOCK NUMBER	FIG.	ITEM
5940-00-939-7825	C-11	43	5980-01-087-2886	C-14	11
6145-00-945-7467	C-7	4	5935-01-090-3110	C-22	2
	C-11	34	5980-01-096-2084	C-3	1
	C-11	34	5935-01-096-8047	C-18	12
6145-00-948-9479	C-7	15	5905-01-097-1621	C-10	99
	C-22	5	5306-01-097-4835	C-15	4
6145-00-949-8006	C-9	10	5310-01-097-6610	C-15	5
5315-00-957-2401	C-15	1	5320-01-097-8082	C-20	12
6145-00-958-6007	C-14	52	1290-01-098-2173	C-15	3
5305-00-959-0382	C-28	15	1290-01-098-2228	C-1	5
5310-00-982-6580	C-6	75	5962-01-102-7610	C-6	55
	C-10	130	5905-01-104-2120	C-10	94
	C-14	54	5915-01-104-7414	C-7	5
5342-00-985-0248	C-15	7	5961-01-105-0608	C-10	29
5305-00-993-9189	C-4	1		C-12	13
5961-01-009-2234	C-10	33	5961-01-107-6773	C-29	8
5961-01-009-6320	C-10	27	5935-01-107-8811	C-33	10
5961-01-012-8198	C-6	11	5935-01-108-4483	C-32	10
5999-01-015-3901	C-6	74	5910-01-119-4302	C-10	17
	C-10	134	5910-01-119-4313	C-10	7
	C-14	58	5910-01-119-4337	C-14	5
5905-01-015-8085	C-10	76	5961-01-121-2301	C-10	36
	C-29	34	5935-01-122-7585	C-16	2
5961-01-016-8475	C-10	51	5962-01-123-3186	C-6	41
5961-01-019-4947	C-10	52		C-6	42
5961-01-023-3449	C-14	8	5962-01-126-3888	C-10	117
5961-01-024-2145	C-10	31	6145-01-135-6836	BULK	1
5961-01-033-0830	C-10	34	5940-01-135-7076	C-33	2
6135-01-036-3495	C-1	3	5940-01-135-7077	C-11	33
5935-01-036-5960	C-5	9		C-32	1
5961-01-037-4712	C-10	23	5962-01-136-4640	C-10	122
5935-01-043-7778	C-5	10	5905-01-137-0094	C-6	29
5905-01-043-9236	C-6	18		C-14	14
5935-01-045-4795	C-5	7	5905-01-137-0108	C-12	20
5905-01-049-3123	C-6	33	5905-01-137-0109	C-12	30
5905-01-053-5789	C-6	19	5905-01-138-6261	C-12	22
5999-01-054-0593	C-6	71	5905-01-139-5314	C-6	26
5935-01-058-6521	C-30	3		C-12	25
5961-01-058-6633	C-10	24	5905-01-139-5315	C-6	35
5961-01-064-4876	C-10	32	5905-01-139-5316	C-6	28
5962-01-066-1587	C-10	120		C-12	19
5961-01-068-1652	C-10	26	5905-01-146-4349	C-12	33
5961-01-069-9546	C-10	39	5905-01-146-6671	C-12	18
5961-01-070-8942	C-6	13	5905-01-146-6672	C-6	22
5935-01-072-3903	C-14	57		C-12	21
5935-01-074-3386	C-6	15	5905-01-146-6673	C-12	28
5970-01-077-0530	C-14	59	5935-01-147-5741	C-11	37
5935-01-078-4517	C-32	9	5915-01-148-3294	C-7	6
5905-01-082-4272	C-10	57	5905-01-148-6092	C-12	29
5905-01-085-1164	C-6	24	5905-01-149-1143	C-6	27

SECTION IV TM9-1290-364-14&P

CROSS-REFERENCE INDEXES

NATIONAL STOCK NUMBER INDEX

STOCK NUMBER	FIG.	ITEM	STOCK NUMBER	FIG.	ITEM
5905-01-149-1143	C-12	27	5905-01-176-3875	C-10	92
	C-14	41	5970-01-176-6892	C-32	3
5905-01-150-5459	C-6	34	5905-01-176-7343	C-10	67
5905-01-150-5515	C-6	30	5905-01-176-7352	C-29	38
5905-01-151-1187	C-29	31	5905-01-176-9306	C-10	77
5935-01-156-7879	C-28	10	5905-01-177-1911	C-10	106
5935-01-157-5854	C-32	11	5905-01-177-9467	C-10	96
5980-01-159-0947	C-10	49	5961-01-179-3470	C-12	16
5935-01-159-3319	C-28	9	5935-01-179-3497	C-11	23
5905-01-159-3767	C-10	100	5905-01-181-2347	C-6	21
5905-01-160-0932	C-6	23	5962-01-182-0577	C-6	51
5340-01-160-2304	C-11	19	5962-01-182-4299	C-10	118
5962-01-160-4990	C-10	37	5905-01-183-6168	C-6	25
5905-01-162-0731	C-12	26	5905-01-184-7938	C-10	84
6145-01-162-6049	C-32	13	5905-01-185-1311	C-10	79
5905-01-163-3117	C-6	20	5905-01-185-1314	C-10	82
5910-01-165-5127	C-10	16	5905-01-185-1429	C-10	105
5935-01-165-5268	C-33	11	5905-01-186-3783	C-10	62
5905-01-165-9845	C-12	24	5905-01-186-3803	C-10	91
5935-01-167-0815	C-7	11	5905-01-186-4912	C-10	71
5905-01-167-5098	C-10	87	5905-01-186-6677	C-10	89
5905-01-167-6969	C-6	31	5905-01-186-7774	C-10	101
6625-01-168-6856	C-34	5	5961-01-187-8836	C-6	16
5905-01-168-7457	C-10	86		C-12	17
5905-01-169-0036	C-10	97	5910-01-188-1671	C-10	10
5905-01-169-0047	C-10	72	5905-01-189-9078	C-10	85
5905-01-169-4097	C-10	103	5905-01-193-5107	C-10	78
5905-01-169-4098	C-12	23	5905-01-195-1355	C-10	63
6145-01-169-5661	C-32	14	5961-01-196-9452	C-10	53
5905-01-170-0377	C-10	102	5905-01-198-2492	C-29	36
5905-01-170-0380	C-10	64	5999-01-198-7077	C-29	11
5905-01-170-0392	C-10	75	5910-01-199-9024	C-10	11
6145-01-170-4658	C-31	5	5962-01-200-8147	C-6	53
5905-01-170-9081	C-10	104	5962-01-200-8321	C-6	39
5962-01-171-3774	C-6	40	5935-01-201-1452	C-7	12
5905-01-171-5638	C-10	59	5905-01-202-5861	C-10	74
5910-01-171-8689	C-10	15	5905-01-203-7817	C-10	107
5910-01-171-8690	C-10	18	5905-01-210-2506	C-10	66
5910-01-171-8693	C-10	6	5910-01-211-5029	C-10	3
	C-10	14	5935-01-212-4692	C-5	2
6625-01-171-9937	C-34	43	5910-01-214-2907	C-10	19
5905-01-173-8932	C-10	81	5910-01-215-4597	C-12	10
5905-01-175-0159	C-10	68	5910-01-217-1761	C-10	1
5905-01-175-0707	C-10	93	5961-01-217-4121	C-10	60
5905-01-175-7857	C-10	88	5910-01-217-8875	C-12	8
6625-01-176-1269	C-34	42	5940-01-221-6415	C-14	47
5905-01-176-3860	C-10	90	5970-01-223-1416	C-10	133
5905-01-176-3862	C-10	61	5905-01-223-3416	C-10	65
5905-01-176-3872	C-29	39	5910-01-224-3023	C-6	2
5905-01-176-3873	C-29	37	5910-01-226-4614	C-10	9

SECTION IV TM9-1290-364-14&P

CROSS-REFERENCE INDEXES

NATIONAL STOCK NUMBER INDEX

STOCK NUMBER	FIG.	ITEM	STOCK NUMBER	FIG.	ITEM
5340-01-229-8412	C-4	11	5330-01-314-7738	C-20	8
5935-01-231-8260	C-30	4	5310-01-332-6522	C-10	135
5910-01-232-1147	C-10	5	5970-01-335-3136	C-33	4
5910-01-232-6460	C-14	1	7020-01-337-8640	C-34	46
5910-01-233-0730	C-12	3	5962-01-346-1240	C-6	50
5905-01-233-1871	C-10	95	5970-01-351-4437	C-32	5
5935-01-233-3416	C-33	9	5970-01-351-6799	C-31	1
5935-01-233-8163	C-16	11	5970-01-351-6801	C-33	5
5910-01-238-0381	C-12	2	5970-01-355-5982	C-16	13
5935-01-238-7768	C-6	14		C-17	13
5961-01-239-0829	C-10	20		C-18	17
5910-01-239-3994	C-12	5		C-32	4
5905-01-239-4381	C-10	98	6130-01-356-8001	C-34	24
5305-01-240-1796	C-1	13	5935-01-358-0836	C-17	2
4940-01-250-4236	C-34	13		C-18	2
5935-01-252-0635	C-17	11	5961-01-358-2682	C-10	55
5961-01-252-6143	C-10	50	5935-01-361-8884	C-33	12
5962-01-254-1149	C-6	36	5910-01-367-2735	C-10	8
5910-01-254-2037	C-10	12	5120-01-367-7652	C-34	48
5910-01-255-4968	C-14	3	5962-01-372-3606	C-6	56
5961-01-257-3586	C-10	58	5905-01-374-2830	C-10	69
	C-14	13	5961-01-381-7429	C-10	25
5905-01-261-3758	C-10	80	5935-01-387-0125	C-16	1
5962-01-262-3919	C-10	121		C-17	1
5962-01-263-9407	C-6	54		C-18	1
5910-01-265-7630	C-12	34		C-33	7
5905-01-266-8951	C-29	33	5962-01-394-3454	C-6	58
5962-01-272-4446	C-6	37	5962-01-406-2375	C-6	43
5970-01-272-5927	C-32	2	5970-01-408-7742	C-33	3
5962-01-277-3331	C-6	48	5895-01-416-6243	C-1	2
4940-01-278-4142	C-34	4	6130-01-416-6246	C-2	3
5905-01-279-4826	C-6	59	6130-01-416-6247	C-1	7
5935-01-279-8630	C-3	3	4933-01-416-7839	C-1	6
	C-11	1	1220-01-417-0901	C-1	1
5999-01-280-1460	BULK	4	5998-01-417-1869	C-3	15
5962-01-282-1049	C-6	38	5998-01-417-1871	C-2	2
5961-01-286-2189	C-10	30	6625-01-417-1872	C-1	4
5962-01-286-2238	C-6	49		C-34	22
5320-01-287-7134	C-20	10	6150-01-417-5049	C-1	9
5962-01-287-9492	C-12	32	6150-01-417-9709	C-1	10
5962-01-287-9499	C-10	119	5962-01-420-8941	C-6	57
5120-01-289-4310	C-34	20	6150-01-430-9512	C-34	49
5962-01-289-7408	C-10	116	5998-01-433-6595	C-34	21
5975-01-291-6323	C-16	4	5998-01-435-3129	C-11	14
	C-17	4	5998-01-435-3130	C-4	7
	C-18	4	5998-01-435-3131	C-13	10
5910-01-312-0552	C-29	3	5998-01-435-3133	C-2	8
5910-01-312-6651	C-29	4	6145-01-435-4411	C-1	11
5910-01-313-6581	C-29	2	6150-01-435-4412	C-3	11
5910-01-313-8382	C-29	5	6130-01-435-4413	C-11	9

SECTION IV TM9-1290-364-14&P

CROSS-REFERENCE INDEXES

NATIONAL STOCK NUMBER INDEX

STOCK NUMBER	FIG.	ITEM	STOCK NUMBER	FIG.	ITEM
6145-01-435-4416	C-34	28	5305-01-446-8109	C-2	15
6625-01-436-2305	C-34	27	6625-01-448-4888	C-34	37
6625-01-436-2310	C-34	36	6130-01-448-4889	C-34	25
8145-01-436-5664	C-1	8	6625-01-448-4890	C-34	38
6110-01-436-5678	C-2	6	6625-01-448-4891	C-34	44
5340-01-436-5679	C-2	1	6625-01-448-4892	C-34	39
9905-01-436-5680	C-20	13	6130-01-448-4893	C-34	31
9905-01-436-5681	C-20	11	6130-01-448-4894	C-34	35
5340-01-442-1979	C-2	18	6625-01-448-4907	C-34	33
5340-01-442-1982	C-11	27	6625-01-448-4908	C-34	32
5840-01-442-6197	C-10	115	5970-01-448-7273	C-33	1
5330-01-442-6611	C-11	8	5915-01-450-4240	C-3	12
5365-01-442-8174	C-13	9	6240-01-452-1253	C-8	3
5365-01-442-8661	C-13	5	6145-01-452-1254	C-34	29
5940-01-443-1937	C-7	16	6150-01-452-1255	C-22	3
5950-01-443-2151	C-10	110	4933-01-452-1256	C-21	1
5950-01-443-2152	C-10	112	5340-01-452-1257	C-21	4
5950-01-443-2153	C-10	45	5305-01-452-1259	C-21	5
5950-01-443-2154	C-14	12	4933-01-452-1260	C-21	7
5950-01-443-2155	C-10	111	5305-01-452-1261	C-21	11
5950-01-443-2157	C-10	108	5340-01-452-1262	C-21	2
5960-01-443-2158	C-10	114	5305-01-452-1263	C-21	3
5950-01-443-2161	C-10	47	5310-01-452-1264	C-21	10
5950-01-443-2162	C-10	113	1290-01-452-4605	C-34	34
5950-01-443-2163	C-10	46	3040-01-452-7983	C-21	9
5950-01-443-2165	C-10	43	5935-01-455-3428	C-31	2
5950-01-443-2166	C-10	109	5930-01-459-5737	C-8	2
5340-01-443-4100	C-2	13	5925-01-459-6071	C-3	10
5340-01-443-4101	C-2	19	5920-01-463-9082	C-10	41
5365-01-443-5024	C-14	43	5962-01-467-5726	C-29	28
5365-01-443-5130	C-13	2	6150-01-468-5178	C-27	3
5980-01-443-8214	C-3	6	7035-01-468-6532	C-27	2
6145-01-443-9994	C-16	5	1290-01-468-6533	C-27	1
	C-33	17	6150-01-468-9384	C-34	50
9340-01-444-0736	C-3	2	5980-01-470-6822	C-3	6A
5935-01-444-3314	C-8	4	5310-01-470-9135	C-21	6
5935-01-444-3673	C-18	11	1285-01-471-1010	C-27	5
5950-01-444-3675	C-7	7	5940-01-477-5550	C-9	8
5930-01-444-4571	C-14	53	5331-01-477-9888	C-28	2
5935-01-444-5256	C-7	10	5310-01-477-9889	C-28	5
5331-01-445-1449	C-2	5	5910-01-478-0850	C-29	6
	C-3	17	5910-01-478-0851	C-29	7
5330-01-445-1450	C-3	18	5962-01-478-2575	C-29	12
5310-01-445-1483	C-7	9	5305-01-478-2576	C-28	1
	C-11	36	5998-01-478-5923	C-28	6
5365-01-445-5840	C-3	13	5930-01-478-6961	C-28	8
5905-01-445-5923	C-10	73	5340-01-479-0483	C-28	22
5840-01-446-4156	C-11	15	5962-01-479-1970	C-29	13
5935-01-446-5272	C-14	46	5930-01-479-1971	C-31	6
5305-01-446-6635	C-11	2	6145-01-479-1972	C-34	53

SECTION IV TM9-1290-364-14&P

CROSS-REFERENCE INDEXES

NATIONAL STOCK NUMBER INDEX

STOCK NUMBER	FIG.	ITEM	STOCK NUMBER	FIG.	ITEM
6625-01-479-1973	C-34	52			
5340-01-479-1974	C-32	7			
6145-01-479-1975	C-32	12			
5935-01-479-3044	C-16	3			
	C-17	3			
	C-18	3			
	C-33	8			
5905-01-479-4521	C-9	3			
5340-01-479-4523	C-15	6			
6145-01-479-4524	C-17	5			
	C-18	5			
5905-01-479-4525	C-22	1			
5915-01-479-4526	C-28	7			
5340-01-479-8092	C-28	23			

SECTION IV TM9-1290-364-14&P

CROSS-REFERENCE INDEXES

PART NUMBER INDEX

CAGEC	PART NUMBER	STOCK NUMBER	FIG.	ITEM
58536	A-55485/02-004D	5999-01-054-0593	C-6	71
58536	A-55485/06-010D	5999-01-198-7077	C-29	11
58536	AA52080-B-5	4020-00-085-1002	BULK	5
24355	ADM232LAN		C-29	15
51640	ADSP-2100ASG/883 B	5962-01-394-3454	C-6	58
S7040	AM20410729	5305-01-478-2576	C-28	1
S7040	AM20410733	5331-01-477-9888	C-28	2
S7040	AM20412173		C-28	3
S7040	AM20412174		C-28	4
S7040	AM20413158	5310-01-477-9889	C-28	5
34335	AM27C256-55DC		BULK	3
S7040	AM6706189-0		C-11	25
S7040	AM6706554-0		C-2	11
S7040	AM6706555-0		C-2	4
S7040	AM6706577-1		C-7	1
S7040	AM6706578-2		C-7	8
S7040	AM6706693-0	5340-01-436-5679	C-2	1
S7040	AM6706696-0		C-4	9
S7040	AM6706714-0	8145-01-436-5664	C-1	8
S7040	AM6707327-0		C-3	20
S7040	AM6707842-0	5365-01-442-8661	C-13	5
S7040	AM6707950-0	4933-01-416-7839	C-1	6
88041	AN960C8	5310-00-685-3744	C-11	18
81541	AP1-1-72-502	5925-01-459-6071	C-3	10
S7040	AY20412143	5998-01-478-5923	C-28	6
S7040	AY20412144	5915-01-479-4526	C-28	7
S7040	AY20412152	7035-01-468-6532	C-27	2
S7040	AY20412269	6625-01-479-1973	C-34	52
S7040	AY20412557	5930-01-478-6961	C-28	8
S7040	AY6704586-0	5998-01-417-1869	C-3	15
S7040	AY6706557-0	5840-01-446-4156	C-11	15
S7040	AY6706566-0	5998-01-435-3129	C-11	14
S7040	AY6706571-0	5895-01-416-6243	C-1	2
S7040	AY6706612-0	5998-01-435-3130	C-4	7
S7040	AY6706619-0	5998-01-435-3131	C-13	10
S7040	AY6706620-0	6130-01-435-4413	C-11	9
S7040	AY6706690-0	6625-01-417-1872	C-1	4
			C-34	22
S7040	AY6706702-0	5980-01-443-8214	C-3	6
S7040	AY6706702-1	5980-01-470-6822	C-3	6A
S7040	AY6706703-0	5998-01-417-1871	C-2	2
S7040	AY6706704-0	6130-01-416-6246	C-2	3
S7040	AY6706705-1	5915-01-450-4240	C-3	12
S7040	AY6706706-0	5998-01-435-3133	C-2	8
S7040	AY6706708-0	6110-01-436-5678	C-2	6
S7040	AY6706709-0	1220-01-417-0901	C-1	1
S7040	AY6707943-0	6625-01-448-4890	C-34	38
S7040	AY6707957-0	6625-01-436-2310	C-34	36
S7040	AY6707990-0	1290-01-452-4605	C-34	34
S7040	AY6708009-0	6625-01-436-2305	C-34	27

SECTION IV TM9-1290-364-14&P

CROSS-REFERENCE INDEXES

PART NUMBER INDEX

CAGEC	PART NUMBER	STOCK NUMBER	FIG.	ITEM
S7040	AY6708018-0	6625-01-448-4888	C-34	37
S7040	AY6708048-0	6625-01-448-4892	C-34	39
S7040	AY9805117-0	5998-01-433-6595	C-34	21
81349	BA-5590/U	6135-01-036-3495	C-1	3
61964	B3F-4055	5930-01-459-5737	C-8	2
81349	CCR05CG101FS	5910-01-215-4597	C-12	10
81349	CCR05CG221GS	5910-01-214-2907	C-10	19
81349	CCR05CJ4R7BS	5910-01-238-0381	C-12	2
81349	CCR05CJ6R8BS		C-6	9
11815	CR3223-4-4	5320-01-097-8082	C-20	12
81349	D38999/20WC4SN		C-19	1
81349	D38999/24WC35PN	5935-01-167-0815	C-7	11
81349	D38999/24WC4PN	5935-01-444-5256	C-7	10
81349	D38999/24WC98PN	5935-01-147-5741	C-11	37
81349	D38999/24WC98SN	5935-01-201-1452	C-7	12
81349	D38999/26WC35SN	5935-01-165-5268	C-33	11
81349	D38999/26WC4PN	5935-01-252-0635	C-17	11
81349	D38999/26WC4SN	5935-01-358-0836	C-17	2
			C-18	2
81349	D38999/26WC98PN	5935-01-233-8163	C-16	11
81349	D38999/26WC98SN	5935-01-122-7585	C-16	2
81349	D38999/32W13R	5935-01-387-0125	C-16	1
			C-17	1
			C-18	1
			C-33	7
81349	D38999/33W13N	5935-01-279-8630	C-3	3
			C-11	1
S7040	EA6706148-0		C-11	24
06090	EPD52415A	6145-01-479-4524	C-17	5
			C-18	5
06090	EPD52416A	6145-01-443-9994	C-16	5
			C-33	17
56878	FN12A-40	5310-00-811-6419	C-10	132
01121	GD2P050F103UA	5905-01-479-4525	C-22	1
81349	GGG391		C-34	19
09359	HK19471		C-9	4
09359	HK5336R809L12D		C-9	5
10054	HP-2	5120-01-289-4310	C-34	20
28480	HPVECTRAES12	7020-01-337-8640	C-34	46
19178	H980-LS-2RG		C-20	5
19178	H984-400		C-20	6
32293	ICM7556MJD/883B	5962-01-182-4299	C-10	118
29436	ID82C52		C-29	16
81349	JANTXV1N4469		C-10	35
81349	JANTXV1N5416	5961-01-023-3449	C-14	8
81349	JANTXV2N2907A	5961-01-019-4947	C-10	52
81349	JANTX1N4101	5961-01-033-0830	C-10	34
81349	JANTX1N4104	5961-01-009-2234	C-10	33
81349	JANTX1N4148-1	5961-00-584-4527	C-6	10
			C-10	22
			C-12	12

SECTION IV TM9-1290-364-14&P

CROSS-REFERENCE INDEXES

PART NUMBER INDEX

CAGEC	PART NUMBER	STOCK NUMBER	FIG.	ITEM
81349	JANTX1N4148-1	5961-00-584-4527	C-14	9
81349	JANTX1N4478	5961-01-009-6320	C-10	27
81349	JANTX1N4618-1	5961-01-286-2189	C-10	30
81349	JANTX1N4625	5961-01-024-2145	C-10	31
81349	JANTX1N4626	5961-01-012-8198	C-6	11
81349	JANTX1N4964	5961-00-458-6778	C-10	38
81349	JANTX1N4969	5961-00-472-0086	C-10	40
81349	JANTX1N4988	5961-01-069-9546	C-10	39
81349	JANTX1N5311	5961-01-068-1652	C-10	26
81349	JANTX1N5552	5961-00-403-3298	C-10	21
81349	JANTX1N5555	5961-00-172-4970	C-14	7
81349	JANTX1N5615	5961-00-426-9613	C-14	10
81349	JANTX1N5806	5961-01-037-4712	C-10	23
81349	JANTX1N5811	5961-01-058-6633	C-10	24
81349	JANTX1N5969	5961-01-239-0829	C-10	20
81349	JANTX1N6064A		C-10	28
81349	JANTX1N6621	5961-01-381-7429	C-10	25
81349	JANTX1N756A		C-6	12
81349	JANTX1N758A-1	5961-01-070-8942	C-6	13
81349	JANTX1N965B-1	5961-01-105-0608	C-10	29
			C-12	13
81349	JANTX1N966B-1	5961-01-064-4876	C-10	32
81349	JANTX1N971B-1	5961-01-121-2301	C-10	36
81349	JANTX2N2219AL	5961-01-179-3470	C-12	16
81349	JANTX2N2222A	5961-00-858-3826	C-6	17
			C-10	54
81349	JANTX2N2905AL	5961-01-187-8836	C-6	16
			C-12	17
81349	JANTX2N3439	5961-00-862-8738	C-10	56
81349	JANTX2N5416	5961-01-016-8475	C-10	51
81349	JANTX2N6784	5961-01-252-6143	C-10	50
81349	JANTX2N6796	5961-01-196-9452	C-10	53
81349	JANTX2N6798	5961-01-217-4121	C-10	60
81349	JANTX2N6849	5961-01-257-3586	C-10	58
			C-14	13
81349	JANTX2N7224	5961-01-358-2682	C-10	55
81349	JANTX2N930	5961-00-022-5669	C-12	15
81349	JANTX4N24A	5980-01-087-2886	C-14	11
81349	JANTX4N49	5980-01-159-0947	C-10	49
34333	JAN7815K	5962-01-262-3919	C-10	121
81349	JTXM19500/51902	5980-01-096-2084	C-3	1
80103	LK342AFM	6130-00-477-0549	C-34	30
80103	LLS-5018	6130-01-448-4893	C-34	31
80103	LLS-5040	6130-01-448-4894	C-34	35
80103	LLS-6040	6130-01-448-4889	C-34	25
80103	LLS-9040	6130-01-356-8001	C-34	24
64155	LM136AH-2.5/883	5962-01-160-4990	C-10	37
62483	LM44B4C40CBH		C-9	2
64155	LT1080MJ/883B	5962-01-346-1240	C-6	50
64155	LT1172IN8	5962-01-467-5726	C-29	28
OPDX3	L108K		C-29	1

SECTION IV TM9-1290-364-14&P

CROSS-REFERENCE INDEXES

PART NUMBER INDEX

CAGEC	PART NUMBER	STOCK NUMBER	FIG.	ITEM
1ES66	MAX691AEJE		C-29	17
S7040	MC20410755	5962-01-478-2575	C-29	12
S7040	MC20410756	5962-01-479-1970	C-29	13
S7040	MC6706585-0		C-6	44
34335	MC6706586-0		C-6	45
S7040	MC6706587-0		C-6	46
34649	MD8251A/B	5962-01-102-7610	C-6	55
80058	ME-162/U		C-34	45
OG3U3	MH74C257B1R		C-29	19
27014	MM54C244J-MIL	5962-01-123-3186	C-6	41
			C-6	42
27014	MM54HC08J/883B	5962-01-200-8321	C-6	39
27014	MM54HC245J/883B	5962-01-200-8147	C-6	53
27014	MM54HC273J/883B	5962-01-282-1049	C-6	38
27014	MM54HC32J/883B	5962-01-171-3774	C-6	40
S7040	MP20410757	5340-01-479-0483	C-28	22
S7040	MP20412176	5340-01-479-8092	C-28	23
S7040	MP6704186-0		C-6	76
S7040	MP6704824-0		C-3	19
S7040	MP6704944-0	5365-01-445-5840	C-3	13
S7040	MP6704975-0	5340-01-443-4101	C-2	19
S7040	MP6704976-0	5340-01-442-1979	C-2	18
S7040	MP6704982-0	5305-01-446-8109	C-2	15
S7040	MP6704984-0	5331-01-445-1449	C-2	5
			C-3	17
S7040	MP6705069-0	5330-01-445-1450	C-3	18
S7040	MP6706560-0		C-13	1
S7040	MP6706561-0	5340-01-443-4100	C-2	13
S7040	MP6706562-0	5305-01-446-6635	C-11	2
S7040	MP6706569-0		C-11	10
S7040	MP6706570-0	5330-01-442-6611	C-11	8
S7040	MP6706575-0		C-5	6
S7040	MP6706581-0		C-10	126
S7040	MP6706582-0		C-6	61
S7040	MP6706604-0		C-14	45
S7040	MP6706605-0	5365-01-442-8174	C-13	9
S7040	MP6706606-0		C-5	8
		5365-01-443-5024	C-14	43
S7040	MP6706607-0	5365-01-443-5130	C-13	2
S7040	MP6706616-0		C-10	123
S7040	MP6706694-0		C-10	125
S7040	MP6706697-0		C-4	2
S7040	MP6706699-0		C-9	1
S7040	MP6706700-0	5310-01-445-1483	C-7	9
			C-11	36
S7040	MP6706701-0	9340-01-444-0736	C-3	2
S7040	MP6707844-0	5935-01-446-5272	C-14	46
S7040	MP6708087-0	5935-01-444-3673	C-18	11
S7040	MP6708090-0	5340-01-442-1982	C-11	27
16236	MSM8251ARS		C-6	55A
80205	MS16995-17	5305-00-959-0382	C-28	15

SECTION IV TM9-1290-364-14&P

CROSS-REFERENCE INDEXES

PART NUMBER INDEX

CAGEC	PART NUMBER	STOCK NUMBER	FIG.	ITEM
96906	MS18130-7		C-10	48
96906	MS20392-4C53	5315-00-957-2401	C-15	1
96906	MS20426AD2-4		C-6	69
		5320-00-117-6929	C-10	131
80205	MS20470AD2-4	5320-00-243-8356	C-14	55
96906	MS20995C20	9505-00-221-2650	BULK	7
			C-28	25
96906	MS21042L08	5310-00-807-1473	C-16	6
			C-17	6
			C-18	6
			C-33	14
96906	MS21919WCG2	5340-01-160-2304	C-11	19
96906	MS21919WDG7	5340-00-200-8559	C-16	9
			C-33	6
96906	MS21919WDG8	5340-00-291-5347	C-17	9
			C-18	9
80205	MS24665-302	5315-00-234-1864	C-15	2
96906	MS24693-C1	5305-00-763-6009	C-4	10
96906	MS24693-C2	5305-00-993-9189	C-4	1
96906	MS24693-C24	5305-00-066-7326	C-2	14
96906	MS24693-C3	5305-00-225-6400	C-4	3
96906	MS24693-C4	5305-00-056-9961	C-13	4
96906	MS24693-C5	5305-00-066-7325	C-2	20
96906	MS24693-C7	5305-00-780-8454	C-13	3
96906	MS25036-148	5940-00-113-9828	C-7	2
			C-14	48
96906	MS25036-149	5940-00-557-1629	C-7	3
96906	MS27183-1	5310-00-982-6580	C-6	75
			C-10	130
			C-14	54
96906	MS3180-12RAL	5935-01-361-8884	C-33	12
96906	MS3180-14CA	5935-01-157-5854	C-32	11
96906	MS3181-12NA	5935-01-156-7879	C-28	10
96906	MS3181-14NA	5935-01-159-3319	C-28	9
80205	MS3212-31	5305-00-855-2989	C-28	17
96906	MS3476W12-10P	5935-01-107-8811	C-33	10
96906	MS3476W14-19P	5935-01-108-4483	C-32	10
96906	MS3476W14-19S	5935-01-078-4517	C-32	9
96906	MS35338-134	5310-00-928-2690	C-6	65
			C-11	12
96906	MS35338-135	5310-00-933-8118	C-3	9
			C-4	5
			C-11	6
			C-13	7
			C-14	50
			C-18	14
			C-19	5
			C-28	13
96906	MS35338-136	5310-00-929-6395	C-11	42
96906	MS35338-137	5310-00-933-8119	C-2	16
			C-11	17

SECTION IV TM9-1290-364-14&P

CROSS-REFERENCE INDEXES

PART NUMBER INDEX

CAGEC	PART NUMBER	STOCK NUMBER	FIG.	ITEM
96906	MS35338-137	5310-00-933-8119	C-15	9
96906	MS35338-138	5310-00-933-8120	C-11	3
96906	MS35338-139	5310-00-933-8121	C-1	12
			C-28	19
96906	MS51859-5	5310-00-138-4315	C-16	8
			C-17	8
			C-18	8
			C-33	15
96906	MS51957-12	5305-00-054-5646	C-11	28
96906	MS51957-13	5305-00-054-5647	C-3	7
			C-11	20
			C-28	18
96906	MS51957-14	5305-00-054-5648	C-7	13
			C-10	127
			C-18	13
			C-19	3
			C-28	11
96906	MS51957-15	5305-00-054-5649	C-4	8
			C-5	3
			C-6	64
			C-11	5
			C-14	56
96906	MS51957-16	5305-00-054-5650	C-10	128
96906	MS51957-18	5305-00-054-5652	C-3	14
96906	MS51957-27	5305-00-054-6651	C-2	9
96906	MS51957-28	5305-00-054-6652	C-2	12
96906	MS51957-3	5305-00-054-5637	C-11	11
96906	MS51957-30	5305-00-054-6654	C-11	41
96906	MS51957-44	5305-00-054-6669	C-15	8
			C-16	10
			C-17	10
			C-18	10
			C-33	16
96906	MS51957-45	5305-00-054-6670	C-11	16
96906	MS51957-5	5305-00-054-5639	C-6	77
96906	MS51957-7	5305-00-054-5641	C-6	66
96906	MS75085-7	5950-00-035-4425	C-10	44
96906	MS77068-1	5940-00-682-2477	C-11	29
96906	MS91528-0E1B	5355-00-762-1489	C-3	5
96906	MS91528-2T4B		C-28	21
81349	M15733/49-0006	5915-01-148-3294	C-7	6
81349	M15733/61-0008	5915-01-104-7414	C-7	5
81349	M22129-22-N	5970-00-837-0647	BULK	2
			C-10	137
81349	M22520/1-01	5120-00-165-3912	C-34	7
81349	M22520/1-02	5120-00-016-6382	C-34	10
81349	M22520/1-04	5120-00-016-7582	C-34	8
81349	M22520/1-09	5120-00-132-5039	C-34	9
81349	M22579/11-22-6		C-11	31
81349	M22759/11-20-0	6145-00-939-4955	BULK	6
			C-11	32

SECTION IV TM9-1290-364-14&P

CROSS-REFERENCE INDEXES

PART NUMBER INDEX

CAGEC	PART NUMBER	STOCK NUMBER	FIG.	ITEM
81349	M22759/11-22-0	6145-00-945-7467	C-7	4
			C-11	34
			C-11	34
81349	M22759/11-22-9	6145-00-949-8006	C-9	10
81349	M22759/11-24-9	6145-00-948-9479	C-22	5
81349	M22759/11-24/9	6145-00-948-9479	C-7	15
81349	M22759/11-26-9	6145-00-958-6007	C-14	52
81349	M22759/32-20-9	6145-01-169-5661	C-32	14
81349	M22759/32-24-9	6145-01-170-4658	C-31	5
81349	M22759/32-26-9	6145-01-162-6049	C-32	13
81349	M23053/16-003-0	5970-01-176-6892	C-32	3
81349	M23053/18-202-C	5970-01-351-6799	C-31	1
81349	M23053/18-204C	5970-01-335-3136	C-33	4
81349	M23053/18-207-C	5970-01-351-6801	C-33	5
81349	M23053/18-208-C	5970-01-351-4437	C-32	5
81349	M23053/5-105-9	5970-00-082-3942	C-9	7
			C-11	35
81349	M23053/5-107-9	5970-00-740-2971	C-22	4
81349	M23053/5-208-C	5970-00-871-5779	C-16	12
			C-17	12
			C-18	16
81349	M24243/6-A608H		C-20	7
81349	M24308/2-2	5935-00-490-5220	C-11	22
81349	M24308/23-10	5935-01-036-5960	C-5	9
81349	M24308/24-8	5935-01-072-3903	C-14	57
81349	M24308/25-9	5935-01-179-3497	C-11	23
81349	M27500-22SB2T23	6145-01-135-6836	BULK	1
81349	M38510/10107BGA	5962-01-287-9492	C-12	32
81349	M38510/10901BPA	5962-01-287-9499	C-10	119
81349	M38510/11201BCA	5962-01-286-2238	C-6	49
81349	M38510/11704BYC		C-14	42
81349	M38510/65701BCA	5962-01-254-1149	C-6	36
81349	M38510/65702BCA	5962-01-277-3331	C-6	48
81349	M38510/65802BEA	5962-01-272-4446	C-6	37
81349	M38527/01-030D	5999-01-015-3901	C-6	74
			C-10	134
			C-14	58
81349	M39003-01-3076	5910-00-495-0042	C-12	1
81349	M39003/01-8032		C-6	3
81349	M39003/01-8048		C-6	6
81349	M39003/01-8078	5910-01-239-3994	C-12	5
81349	M39003/01-8103	5910-01-255-4968	C-14	3
81349	M39003/01-8121	5910-01-233-0730	C-12	3
81349	M39003/01-8214	5910-01-224-3023	C-6	2
81349	M39003/01-8234	5910-01-232-6460	C-14	1
81349	M39003/03-3025		C-6	4
81349	M39003/09-4029		C-10	13
81349	M39006/22-0550	5910-01-367-2735	C-10	8
81349	M39006/22-0571	5910-01-119-4302	C-10	17
81349	M39006/22-0612	5910-01-119-4337	C-14	5
81349	M39006/22-0660	5910-01-119-4313	C-10	7

SECTION IV TM9-1290-364-14&P

CROSS-REFERENCE INDEXES

PART NUMBER INDEX

CAGEC	PART NUMBER	STOCK NUMBER	FIG.	ITEM
81349	M39014/01-1330V	5910-01-313-8382	C-29	5
81349	M39014/01-1357	5910-00-010-8666	C-10	4
			C-12	4
81349	M39014/01-1575V	5910-01-313-6581	C-29	2
81349	M39014/01-1583	5910-00-305-9515	C-12	11
81349	M39014/01-1593V	5910-01-312-0552	C-29	3
81349	M39014/02-1338	5910-00-010-8718	C-14	2
81349	M39014/02-1350	5910-00-113-5499	C-14	6
81349	M39014/02-1356	5910-00-113-5286	C-12	9
81349	M39014/02-1360	5910-00-113-5465	C-12	7
81349	M39014/02-1419	5910-00-010-8721	C-10	2
			C-12	6
			C-14	4
81349	M39014/02-1419V	5910-01-312-6651	C-29	4
81349	M39014/05-2331	5910-00-099-0569	C-11	40
81349	M39014/22-0975		C-6	7
		5910-01-226-4614	C-10	9
81349	M39014/22-0980	5910-01-199-9024	C-10	11
81349	M39014/22-0986	5910-01-171-8690	C-10	18
81349	M39014/22-1011		C-6	8
81349	M39014/22-1047	5910-01-232-1147	C-10	5
81349	M39014/22-1067	5910-01-165-5127	C-10	16
81349	M39014/22-1070	5910-01-171-8689	C-10	15
81349	M39014/22-1079		C-6	5
81349	M39014/22-1091	5910-01-188-1671	C-10	10
81349	M39014/22-1094		C-6	1
		5910-01-171-8693	C-10	6
			C-10	14
81349	M39014/22-1114	5910-01-211-5029	C-10	3
81349	M39014/22-1132	5910-01-217-1761	C-10	1
81349	M39014/22-1150	5910-01-254-2037	C-10	12
81349	M55155/26XJ03	5940-00-939-7825	C-11	43
81349	M55302/131-01	5935-01-238-7768	C-6	14
81349	M55302/132-01	5935-01-212-4692	C-5	2
81349	M55302/55-A60M	5935-01-090-3110	C-22	2
81349	M55302/56B30	5935-01-045-4795	C-5	7
81349	M55302/56B60	5935-01-043-7778	C-5	10
81349	M55302/61A14	5935-01-058-6521	C-30	3
81349	M55302/63-B36X	5935-01-231-8260	C-30	4
81349	M55302/64-B60F	5935-01-074-3386	C-6	15
81349	M55302/66L-305		C-9	6
81349	M55310/16-B41A32 M000		C-6	47
OG3U3	M74HC11B1R		C-29	20
OG3U3	M74HC14B1R		C-29	21
OG3U3	M74HC164B1R		C-29	26
OG3U3	M74HC244B1R		C-29	24
OG3U3	M74HC373B1R		C-29	23
OG3U3	M74HC393B1R		C-29	18
OG3U3	M74HC74B1R		C-29	25
OG3U3	M74HC86B1R		C-29	27

SECTION IV TM9-1290-364-14&P

CROSS-REFERENCE INDEXES

PART NUMBER INDEX

CAGEC	PART NUMBER	STOCK NUMBER	FIG.	ITEM
81349	M81044/12-22-9	6145-00-144-0231	C-13	11
81349	M81969/14-01	5120-00-018-0575	C-34	1
81349	M81969/14-03	5120-00-915-4588	C-34	3
81349	M81969/14-11	5120-00-915-4587	C-34	2
81349	M8340109K1002FC	5905-01-198-2492	C-29	36
81349	M8340109K5601GC	5905-01-279-4826	C-6	59
81349	M83421/01-4039S	5910-01-265-7630	C-12	34
81349	M83421/01-4051S	5910-01-217-8875	C-12	8
81349	M83519/1-1	5940-01-135-7076	C-33	2
81349	M83519/1-3	5940-01-135-7077	C-11	33
			C-32	1
81349	M85049/60-2G12W	5935-01-233-3416	C-33	9
81349	M87893-02	4940-01-250-4236	C-34	13
80205	NAS1397P4N	5340-00-782-8737	C-3	16
			C-11	30
80205	NAS1829-3C03	5340-01-229-8412	C-4	11
80205	NAS620C10L	5310-00-781-9483	C-11	4
80205	NAS620C2	5310-00-043-4708	C-6	67
			C-11	13
80205	NAS620C4	5310-00-057-0573	C-3	8
			C-5	4
			C-6	63
			C-11	7
			C-28	12
			C-30	9
80205	NAS620C4L	5310-00-723-9676	C-4	4
			C-7	14
			C-10	129
			C-13	6
			C-14	49
			C-18	15
			C-19	4
80205	NAS620C6	5310-00-773-7624	C-2	10
80205	NAS620C6L	5310-00-054-0041	C-28	16
80205	NAS620C8	5310-00-069-5291	C-2	17
			C-16	7
			C-17	7
			C-18	7
			C-33	13
80205	NAS671-4	5310-00-810-7785	C-19	6
80205	NAS671C2	5310-00-812-4294	C-6	68
80205	NAS671C4	5310-00-208-3786	C-4	6
			C-5	5
			C-13	8
			C-14	51
			C-28	14
			C-30	10
80205	NAS9301E-5-04	5320-01-287-7134	C-20	10
S7040	NP20412158		C-28	24
S7040	NP6706572-0		C-11	26
S7040	NP6706711-0		C-2	7

SECTION IV TM9-1290-364-14&P

CROSS-REFERENCE INDEXES

PART NUMBER INDEX

CAGEC	PART NUMBER	STOCK NUMBER	FIG.	ITEM
S7040	NP6706712-0	9905-01-436-5680	C-20	13
S7040	NP6706713-0	9905-01-436-5681	C-20	11
S7040	OL3091	6240-01-452-1253	C-8	3
24355	OP221AZ/883B	5840-01-442-6197	C-10	115
S7040	PC20410661		C-29	30
S7040	PC20410694		C-30	11
S7040	PC6704585-0		C-8	1
S7040	PC6706553-0		C-10	124
S7040	PC6706556-0		C-6	60
S7040	PC6706565-0		C-12	36
S7040	PC6706579-0		C-5	1
S7040	PC6706618-0		C-14	44
89536	PM6680/011	6625-01-176-1269	C-34	42
80063	PPL863	5180-00-605-0079	C-34	11
91506	PPS101-1A1321L		C-6	72
S7040	PR20412169	1285-01-471-1010	C-27	5
55719	PWC52A		C-34	15
81348	QQB575R36T0375	6145-00-194-9829	C-32	6
81348	QQW343S22S1T	6145-00-160-4775	C-10	136
			C-29	41
81349	RCR07G106JS	5905-00-121-9919	C-6	32
81349	RER50F6R19R		C-13	12
81349	REW620C8L	5310-00-880-5975	C-15	10
81349	RLR05C10R0GS	5905-01-202-5861	C-10	74
81349	RLR05C1000FS	5905-01-210-2506	C-10	66
81349	RLR05C1001FS	5905-01-015-8085	C-10	76
			C-29	34
81349	RLR05C1002FS	5905-01-170-0380	C-10	64
81349	RLR05C1002GS	5905-01-176-3873	C-29	37
81349	RLR05C1003FS	5905-01-169-0047	C-10	72
81349	RLR05C1003GS	5905-01-176-3872	C-29	39
81349	RLR05C1004FR		C-10	70
81349	RLR05C11R8FS	5905-01-374-2830	C-10	69
81349	RLR05C1202GS	5905-01-177-1911	C-10	106
81349	RLR05C1241FS	5905-01-266-8951	C-29	33
81349	RLR05C15R0FS	5905-01-193-5107	C-10	78
81349	RLR05C1501FS	5905-01-104-2120	C-10	94
81349	RLR05C1601GS	5905-01-176-9306	C-10	77
81349	RLR05C1652FS	5905-01-203-7817	C-10	107
81349	RLR05C1691FS	5905-01-189-9078	C-10	85
81349	RLR05C1742FS	5905-01-170-9081	C-10	104
81349	RLR05C1912FS	5905-01-176-3860	C-10	90
81349	RLR05C2002FS	5905-01-171-5638	C-10	59
81349	RLR05C2200GS	5905-01-176-3875	C-10	92
81349	RLR05C2201GS	5905-01-175-7857	C-10	88
81349	RLR05C24R3FS	5905-01-185-1429	C-10	105
81349	RLR05C2491FS	5905-01-186-7774	C-10	101
81349	RLR05C2551FS	5905-01-261-3758	C-10	80
81349	RLR05C2702GS	5905-01-176-7352	C-29	38
81349	RLR05C2742FS	5905-01-170-0377	C-10	102
81349	RLR05C2743FS	5905-01-223-3416	C-10	65

SECTION IV TM9-1290-364-14&P

CROSS-REFERENCE INDEXES

PART NUMBER INDEX

CAGEC	PART NUMBER	STOCK NUMBER	FIG.	ITEM
81349	RLR05C3012FS	5905-01-170-0392	C-10	75
81349	RLR05C3301GS	5905-01-177-9467	C-10	96
81349	RLR05C3320FS	5905-01-176-3862	C-10	61
81349	RLR05C4022FS	5905-01-186-6677	C-10	89
81349	RLR05C4531FS	5905-01-185-1311	C-10	79
81349	RLR05C47R0GS	5905-01-176-7343	C-10	67
81349	RLR05C4700GS	5905-01-175-0707	C-10	93
81349	RLR05C4701GS	5905-01-173-8932	C-10	81
81349	RLR05C4751FS	5905-01-186-3783	C-10	62
81349	RLR05C4752FS	5905-01-186-4912	C-10	71
81349	RLR05C4753FR	5905-01-445-5923	C-10	73
81349	RLR05C48R7FS	5905-01-239-4381	C-10	98
81349	RLR05C4992FS	5905-01-185-1314	C-10	82
81349	RLR05C5110FS	5905-01-169-4097	C-10	103
81349	RLR05C5111FS	5905-01-168-7457	C-10	86
81349	RLR05C6490FS	5905-01-233-1871	C-10	95
81349	RLR05C6802GS	5905-01-167-5098	C-10	87
81349	RLR05C6982FS	5905-01-195-1355	C-10	63
81349	RLR05C7R50FS		C-10	83
81349	RLR05C7501FS	5905-01-184-7938	C-10	84
81349	RLR05C9091FS	5905-01-186-3803	C-10	91
81349	RLR07C1001GS	5905-01-085-1164	C-6	24
81349	RLR07C1002GS	5905-01-139-5314	C-6	26
			C-12	25
81349	RLR07C1003FS	5905-01-043-9236	C-6	18
81349	RLR07C1003GS	5905-01-151-1187	C-29	31
81349	RLR07C1201GS	5905-01-053-5789	C-6	19
81349	RLR07C1202GS	5905-01-146-6672	C-6	22
			C-12	21
81349	RLR07C15R0GS	5905-01-169-4098	C-12	23
81349	RLR07C1501GS	5905-01-148-6092	C-12	29
81349	RLR07C1502GS	5905-01-146-6671	C-12	18
81349	RLR07C1503GS	5905-01-139-5315	C-6	35
81349	RLR07C1601GS	5905-01-167-6969	C-6	31
81349	RLR07C1742FS	5905-01-181-2347	C-6	21
81349	RLR07C1802GS	5905-01-146-6673	C-12	28
81349	RLR07C20R0GS	5905-01-183-6168	C-6	25
81349	RLR07C2001GS	5905-01-150-5459	C-6	34
81349	RLR07C2003GS	5905-01-150-5515	C-6	30
81349	RLR07C2200GS	5905-01-049-3123	C-6	33
81349	RLR07C2203GS	5905-01-139-5316	C-6	28
			C-12	19
81349	RLR07C2700GS	5905-01-137-0108	C-12	20
81349	RLR07C2702GS	5905-01-162-0731	C-12	26
81349	RLR07C3301GS	5905-01-138-6261	C-12	22
81349	RLR07C3321FS	5905-01-163-3117	C-6	20
81349	RLR07C3900GS	5905-01-160-0932	C-6	23
81349	RLR07C4702GS	5905-01-137-0109	C-12	30
81349	RLR07C5601GS	5905-01-149-1143	C-6	27
			C-12	27
			C-14	41

SECTION IV TM9-1290-364-14&P

CROSS-REFERENCE INDEXES

PART NUMBER INDEX

CAGEC	PART NUMBER	STOCK NUMBER	FIG.	ITEM
81349	RLR07C6800GS	5905-01-137-0094	C-6	29
			C-14	14
81349	RLR07C6801GS	5905-01-165-9845	C-12	24
81349	RLR07C8202GS	5905-01-146-4349	C-12	33
81349	RNC55H1001FS	5905-00-138-3376	C-14	39
81349	RNC55H2430FS	5905-00-203-1478	C-14	16
81349	RNC55H4751FS	5905-00-412-4049	C-29	32
81349	RNC55J1001FS	5905-00-164-1726	C-14	18
81349	RNC55J1021FS	5905-00-285-1997	C-14	19
81349	RNC55J1051FS		C-14	20
81349	RNC55J1071FS	5905-00-208-3953	C-14	21
81349	RNC55J1101FS	5905-00-305-5252	C-14	22
81349	RNC55J2261FS	5905-00-270-2753	C-14	40
81349	RNC55J2552FS	5905-00-292-0981	C-14	15
81349	RNC55J6190FS	5905-00-758-3112	C-14	23
81349	RNC55J6340FS	5905-00-432-0376	C-14	24
81349	RNC55J6490FS	5905-00-305-6126	C-14	25
81349	RNC55J6650FS	5905-00-476-4679	C-14	26
81349	RNC55J6810FS	5905-00-476-4680	C-14	27
81349	RNC55J6980FS	5905-00-476-4681	C-14	28
81349	RNC55J7150FS	5905-00-476-4682	C-14	29
81349	RNC55J7320FS	5905-00-476-4683	C-14	30
81349	RNC55J7500FS	5905-00-476-4684	C-14	31
81349	RNC55J7680FS	5905-00-476-4685	C-14	32
81349	RNC55J7870FS	5905-00-476-4686	C-14	33
81349	RNC55J8060FS	5905-00-476-4687	C-14	34
81349	RNC55J8450FS	5905-00-476-4689	C-14	35
81349	RNC55J9090FS	5905-00-476-4691	C-14	36
81349	RNC55J9310FS	5905-00-476-4695	C-14	37
81349	RNC55J9530FS	5905-00-476-4696	C-14	38
81349	RNC55J9760FS	5905-00-476-4668	C-14	17
81349	RNC60K3741FS	5905-00-323-9141	C-29	35
81349	RWR81SR100FS	5905-01-169-0036	C-10	97
81349	RWR81SR402FS	5905-01-159-3767	C-10	100
81349	RWR81S1001FS	5905-01-082-4272	C-10	57
81349	RWR81S4R75FS	5905-01-175-0159	C-10	68
81349	RWR81S5R11FS	5905-01-097-1621	C-10	99
97539	SEELSKREWR10-32X 3-8	5305-00-855-2989	C-3	4
			C-11	44
81349	SE11XC01S		C-12	35
		5940-01-221-6415	C-14	47
81349	SE182E01S	5940-01-443-1937	C-7	16
81349	SE186E01	5940-00-144-1622	C-11	39
81348	SN63WRMAP2 0.063 1LB	3439-00-153-4280	C-31	3
09359	S7752NXY15A	5905-01-479-4521	C-9	3
34649	TD80C51FA1		C-29	14
S7040	TGC2338		C-19	2
S7040	TH20410750		C-30	13
06090	TMS-SCE 1/2-2.09	5970-01-355-5982	C-16	13

SECTION IV TM9-1290-364-14&P

CROSS-REFERENCE INDEXES

PART NUMBER INDEX

CAGEC	PART NUMBER	STOCK NUMBER	FIG.	ITEM
06090	TMS-SCE 1/2-2.09	5970-01-355-5982	C-17	13
			C-18	17
06090	TMS-SCE-1/2-2.0-9	5970-01-355-5982	C-32	4
06090	TMS-SCE-3/8-2.0-9	5970-01-448-7273	C-33	1
S7040	TM6705331-0	5960-01-443-2158	C-10	114
S7040	TM6705332-0	5950-01-443-2157	C-10	108
S7040	TM6705333-0	5950-01-443-2151	C-10	110
S7040	TM6705334-0		C-10	42
S7040	TM6705335-0	5950-01-443-2153	C-10	45
S7040	TM6705336-0	5950-01-443-2163	C-10	46
S7040	TM6705337-0	5950-01-443-2152	C-10	112
S7040	TM6705338-0	5950-01-443-2155	C-10	111
S7040	TM6705577-0	5950-01-443-2166	C-10	109
S7040	TM6705578-0	5950-01-443-2165	C-10	43
S7040	TM6705579-0	5950-01-443-2162	C-10	113
S7040	TM6706567-0		C-12	31
S7040	TM6706568-0		C-12	14
S7040	TM6706621-0	5950-01-443-2154	C-14	12
S7040	TM6706675-0	5950-01-443-2161	C-10	47
S7040	TM6708198-0	5950-01-444-3675	C-7	7
96508	TS30		C-34	6
12969	UC1843J/883B	5962-01-289-7408	C-10	116
12436	V00154-004		C-34	14
52094	V225-4.80HR		C-6	70
S7040	WA20410634	6150-01-468-5178	C-27	3
S7040	WA20412280	6145-01-479-1972	C-34	53
S7040	WA20413064	6150-01-468-9384	C-34	50
S7040	WA6706563-0		C-11	21
S7040	WA6706707-0	6150-01-435-4412	C-3	11
S7040	WA6706717-0	6150-01-417-5049	C-1	9
S7040	WA6706718-0	6130-01-416-6247	C-1	7
S7040	WA6706719-0	6150-01-417-9709	C-1	10
S7040	WA6708023-0	6145-01-435-4411	C-1	11
S7040	WA6708147-0		C-34	51
S7040	WA6708180-0	6150-01-430-9512	C-34	49
S7040	WA6709092-0	6145-01-435-4416	C-34	28
S7040	WA6709094-0	6145-01-452-1254	C-34	29
S7040	WA6709097-0	6625-01-448-4907	C-34	33
S7040	WA6709098-0	6625-01-448-4908	C-34	32
10400	WTAX36SED9		C-29	10
0URH2	WTDXA14SAJT	5935-01-455-3428	C-31	2
S7040	WT6707886-0	5930-01-444-4571	C-14	53
60395	X24C08PI		C-29	22
03663	ZP105003	5330-01-314-7738	C-20	8
19178	ZRM2212-0512-A1C		C-20	1
98376	ZSP6-037-1	4820-00-760-6830	C-20	9
06090	000W212	5340-01-479-1974	C-32	7
89305	033759-2		C-6	52
04713	1N4001	5961-00-278-9620	C-29	9

SECTION IV TM9-1290-364-14&P

CROSS-REFERENCE INDEXES

PART NUMBER INDEX

CAGEC	PART NUMBER	STOCK NUMBER	FIG.	ITEM
80131	1N5822	5961-01-107-6773	C-29	8
18565	10-04-1720-1215	5999-01-280-1460	BULK	4
S4091	10SA100K	5910-01-478-0850	C-29	6
S4091	10SA220K	5910-01-478-0851	C-29	7
83284	10008	4940-01-278-4142	C-34	4
19200	1054521	4020-00-753-6555	C-9	9
28480	1070B	6625-01-448-4891	C-34	44
98571	1107022	5940-01-477-5550	C-9	8
19200	11838876	1290-01-468-6533	C-27	1
04222	12065C104JAT2A		C-30	1
19200	12922092	5310-01-097-6610	C-15	5
19200	12922093	5306-01-097-4835	C-15	4
19200	12922094	1290-01-098-2173	C-15	3
19200	12922096	5340-01-479-4523	C-15	6
19200	12922098	1290-01-098-2228	C-1	5
19200	12922110	5342-00-985-0248	C-15	7
97871	155-8587-001	5340-00-782-8737	C-11	38
23338	178		C-34	41
82110	18DR-FYR-LACE R	4020-00-231-2048	C-31	4
12813	189636	5935-01-096-8047	C-18	12
19178	2-57-1680-11		C-20	4
19178	2-57-2778-11		C-20	2
06090	201M17TO3L	5935-01-444-3314	C-8	4
06090	202D132-25	5970-01-408-7742	C-33	3
06090	202K142-25-01	5970-01-272-5927	C-32	2
06090	202S142-25S	5975-01-291-6323	C-16	4
			C-17	4
			C-18	4
06090	209M312-19B	5935-01-479-3044	C-16	3
			C-17	3
			C-18	3
			C-33	8
75915	253002	5920-01-463-9082	C-10	41
91833	3049	5310-01-332-6522	C-10	135
50893	31335	5120-01-367-7652	C-34	48
22915	340475	5962-01-182-0577	C-6	51
28480	3478A	6625-01-171-9937	C-34	43
S7040	399-00Z-A548	6150-01-452-1255	C-22	3
56699	4330-030-3630		C-30	12
07690	438285-47	5305-01-240-1796	C-1	13
R2018	5HM3-65756K-9		C-29	29
28480	5350B		C-34	26
06090	55A1131-22-2/4/6-9	6145-01-479-1975	C-32	12
R2013	595A1-14-07-1-C		C-32	8
67268	5962-8866203NA	5962-01-406-2375	C-6	43
67268	5962-8956101EA	5962-01-372-3606	C-6	56
67268	5962-9071103MEA	5962-01-420-8941	C-6	57
18565	60-11-4305-1674	5970-01-077-0530	C-14	59
18565	60-11-4374-1674	5970-01-223-1416	C-10	133
99899	640	5985-00-729-1297	C-34	18

SECTION IV TM9-1290-364-14&P

CROSS-REFERENCE INDEXES

PART NUMBER INDEX

CAGEC	PART NUMBER	STOCK NUMBER	FIG.	ITEM
55111	6635	5130-00-935-7354	C-34	16
R2002	7VJ0805Y103JXBMT		C-30	2
81073	71BS30-01-1-12NF	5930-01-479-1971	C-31	6
76381	75 1/2		C-6	73
89536	77-2	6625-01-168-6856	C-34	5
30554	79-9882-3	5962-01-126-3888	C-10	117
R2017	8RCH110-220M		C-29	40
67268	8406501JA	5962-01-263-9407	C-6	54
59610	851-07A12-10S5016		C-30	7
59610	851-07A14-19P5016		C-30	5
59610	851-07A14-19S5016		C-30	6
80249	890664		C-34	40
M8134	9M24308/24-34		C-10	139
11083	9M5731		C-20	3
65597	915012-0015		C-30	8
19203	9324286	5962-01-066-1587	C-10	120
S7040	950326-12	3040-01-452-7983	C-21	9
S7040	950326-13	5305-01-452-1261	C-21	11
S7040	950326-14	5310-01-452-1264	C-21	10
S7040	950326-17		C-21	8
S7040	950326-2	5340-01-452-1262	C-21	2
S7040	950326-4	5305-01-452-1263	C-21	3
S7040	950326-5	5340-01-452-1257	C-21	4
S7040	950326-6	5305-01-452-1259	C-21	5
S7040	950326-7	5310-01-470-9135	C-21	6
S7040	950328	4933-01-452-1260	C-21	7
S7040	950330	4933-01-452-1256	C-21	1
49956	952536-3	5962-01-136-4640	C-10	122

APPENDIX D
OVERHAUL PROCEDURES

APPENDIX CONTENTS

		Page
SECTION I.	GENERAL	D-2
SECTION II.	TECHNICAL SUPPORT REQUIREMENTS	D-3
SECTION III.	PRESHOP ANALYSIS	D-4
SECTION IV.	M94 CONVENTIONAL MUZZLE VELOCITY SYSTEM (MVS), P/N 12950994	D-9
SECTION V.	CONTROL PROCESSOR AND DISPLAY UNIT (CPDU) ASSEMBLY, P/N AY6706709-0	D-24
SECTION VI.	POWER SUPPLY MODULE, P/N AY6706704-0	D-26
SECTION VII.	MUZZLE VELOCITY PROCESSOR CIRCUIT CARD ASSEMBLY, P/N AY6706703-0	D-49
SECTION VIII.	DISPLAY MODULE, P/N AY6706702-0	D-81
SECTION IX.	TRANSCEIVER ASSEMBLY, P/Ns AY6706571-0 AND AY6706571-2	D-88
SECTION X.	MICROWAVE TEST EQUIPMENT, DESCRIPTION AND CALIBRATION	D-121

SECTION I.

GENERAL

SECTION CONTENTS

		Page
D.1	GENERAL	D-2
D.1.1	SCOPE	D-2
D.1.2	GENERAL INFORMATION	D-2

D.1 GENERAL

D.1.1 Scope

This appendix provides instructions for use by depot personnel. They are detailed testing and repair procedures that apply to the M94 Muzzle Velocity System (MVS). In case of a conflict, these instructions take precedence over other documents pertinent to the overhaul of the M94 MVS. Condition of overhauled M94 MVS shall be that utility and performance are equal to that of condition code A, as defined in AR 725-50.

No item shall be repaired/restored if replacement is more cost effective. Unless exempt, the item repair shall not exceed Maintenance Expenditure Limit (MEL) without an approval waiver in accordance with AMC-R 750-51.

D.1.2 General Information

This appendix provides additional information and instructions for assemblies and subassemblies, which are not listed in Chapter 3 of this manual. For maintenance instructions on assemblies and subassemblies not listed herein, refer to Chapter 3.

This appendix is divided into (10) sections. Sections I and II contain general and technical support information. Section III contains the preshop analysis requirements. Sections IV through X contain instructions for subassemblies identified as faulty. These sections provide removal, disassembly, cleaning, inspection, troubleshooting, repair, and assembly procedures for each assembly and subassembly.

SECTION II.

TECHNICAL SUPPORT REQUIREMENTS

SECTION CONTENTS

		Page
D.2	TECHNICAL SUPPORT REQUIREMENTS	D-3
D.2.1	FACILITIES	D-3
D.2.2	TEST EQUIPMENT AND SPECIAL TOOLS	D-3
D.2.3	MATERIAL REQUIRED	D-3
D.2.4	FABRICATED TOOLS AND EQUIPMENT	D-3
D.2.5	MANDATORY REPLACEMENT PARTS	D-3
D.2.6	REPAIR PARTS	D-3
D.2.7	MODIFICATIONS	D-3

D.2 TECHNICAL SUPPORT REQUIREMENTS

D.2.1 Facilities

There are no special facilities required to perform these procedures.

D.2.2 Test Equipment and Special Tools

The test equipment and special tools required for the maintenance of the M94 Muzzle Velocity System (MVS) are listed in the appropriate sections for each assembly or subassembly.

D.2.3 Material Required

The materials and other consumable items required for the general maintenance of the M94 MVS are listed in the appropriate sections for each assembly or subassembly.

D.2.4 Fabricated Tools and Equipment

No fabricated tools or equipment are required to test and maintain the M94 MVS at depot maintenance.

D.2.5 Mandatory Replacement Parts

There are no mandatory replacement parts required during overhaul of the M94 MVS.

D.2.6 Repair Parts

Refer to Appendix C of this manual for the depot level repair parts that may be required during overhaul.

D.2.7 Modifications

All current Modification Work Orders (MWOs) not installed must be applied to the M94 MVS or its repairable subassemblies before returning the item(s) to supply. Refer to DA PAM 25-30 for published MWOs. Engineering Change Proposals (ECPs) specified by the contractor/Procurement Work Directive (PWD) must also be applied during the overhaul of the item(s).

SECTION III.
PRESHOP ANALYSIS

SECTION CONTENTS

		Page
D.3	PRESHOP ANALYSIS	D-4
D.3.1	SCOPE	D-4
D.3.2	CHECKING ATTACHED DOCUMENTS	D-4
D.3.3	UNPACKING AND SPECIAL HANDLING	D-5
D.3.4	EXTERNAL INSPECTION	D-5
D.3.5	CLEANING AND PRESERVATION	D-5
D.3.6	CORROSION.	D-5
D.3.7	PRESHOP ANALYSIS	D-6
D.3.8	PRESHOP ANALYSIS CHECKLIST.	D-6

D.3 PRESHOP ANALYSIS

D.3.1 Scope

The purpose of preshop analysis is to inspect and test the M94 Muzzle Velocity System (MVS) prior to performing any repair or overhaul procedures at depot. This will minimize unnecessary disassembly or testing procedures and ensure that the M94 MVS is repaired in the most efficient manner.

D.3.2 Checking Attached Documents

Depot maintenance personnel shall carefully check all tags, forms, and attached documents to the M94 MVS when it is received. These documents will identify the type of operational faults noted in the M94 MVS and will indicate any troubleshooting and repair procedure performed at a lower level of maintenance. This information will aid the depot maintenance personnel in diagnosing faults in the M94 MVS.

D.3.3 Unpacking and Special Handling

CAUTION

This equipment contains assemblies subject to damage by electrostatic discharge. Use approved grounding procedures before touching, removing or inserting printed wiring assemblies.

The M94 MVS System contains circuit card assemblies (CCAs) that are electrostatic discharge (ESD) sensitive. If CCAs are received at the depot, they should be protected by static shielding bags. Maintenance personnel must wear grounded wrist straps when handling ESD sensitive material, and inspect, test, and repair CCAs at approved static workstations using all precautionary handling techniques.

D.3.4 External Inspection

Inspect the M94 MVS for damaged and missing parts. Record information on preshop analysis checklist. If any discrepancies are discovered, refer to the applicable repair and replacement procedures provided in the appropriate sections of this appendix.

a. Chassis and Covers. Inspect the chassis and the covers for dents, gouges, scratches, or chipped paint.
b. Antenna Radome. Inspect radome for physical damage. No paint is allowed on radome. Clean if necessary.
c. Connectors. Inspect the connectors for missing protection caps, cap chains, bent or missing pins, broken body, and secure mounting.
d. Identification Plates. Inspect for missing or damaged identification plates.
e. Threaded Parts. Inspect all threaded parts for crossed, stripped, or otherwise damaged threads.
f. Keyboard Gasket. Inspect gasket for tears, holes, or other damage.
g. Display Window. Inspect window for scratches, nicks, or other damage.
h. Switches and Knobs. Inspect switches and knobs for secure attachment and proper alignment.
i. Indicators. Inspect indicators for broken lenses and security of attachment.
j. Circuit Card Assemblies. Inspect CCA's IAW their respective inspection requirements.

D.3.5 Cleaning and Preservation

If necessary, clean and paint the M94 MVS in accordance with paragraphs 3.1.4 and 3.1.9 of Chapter 3 in this manual.

D.3.6 Corrosion.

Refer to paragraph 1.6 of Chapter 1 in this manual for actions required if a corrosion problem is identified.

D.3.7 Preshop Analysis

Refer to Table D-1 for the preshop analysis checklist. The table lists the inspections/tests that are necessary to evaluate the condition of the M94 MVS prior to overhaul and to determine the maintenance task required during overhaul. The checklist should be reproduced locally, as required, for recording preshop analysis checks.

D.3.8 Preshop Analysis Checklist

The checklist specifies the areas to be inspected in five columns. The assembly and serial numbers must be filled in. The person receiving the item is to review any accompanying tags or forms, check off either or both, if applicable, then sign and date the sheet.

The column headings and purposes are:

a. Column 1: Inspection Point. This column indicates the assembly or item to be inspected or tested.

b. Column 2: Condition. This column indicates the inspection or test to be performed by maintenance personnel to determine the condition of the assembly or item.

c. Column 3: Action. This column lists the test or repair action required to correct a faulty condition.

d. Column 4: Remarks. This column provides space for the maintenance personnel to indicate the results of the inspection, repair or test.

e. Column 5: Done. This column provides space for maintenance personnel to indicate completion of each preshop analysis check.

Table D-1. Preshop Analysis Checklist

Assembly No.: _____

Ser. No.: _____

Reviewed Tags: _____

Reviewed Forms: _____

Inspection Point	Condition	Action	Remarks	Done
M94 MVS System	No visual physical damage	Para. D.3.4		
CPDU	Scratched, gouged, chipped paint	Para. 3.1.9		
	Bent, broken, missing connector contacts	Para's. 3.6.5 and 3.6.6		
	Broken connector body	Para's. 3.6.5 and 3.6.6		
	Unsecured connector mounting	Para. 3.6.6.c.		
	Torn or otherwise damaged keyboard gasket	Para's 3.5.5.2 and 3.5.6.1		
	Scratched or broken window	Para. 3.16.7		
	Missing, unsecured, not properly aligned switches and knobs	Para. 3.18.6.k.		
	Broken, unsecured indicator	Para. 3.18.5.d.		
	Frayed wires or insulation, burned or shorted conditions	Replace using standard shop procedures.		
	Functional fault	Para. 3.2.8		
Transceiver Assy	Scratched, gouged, chipped paint	Para. 3.1.9		
	Bent, broken, missing connector contacts	Para's. D.9.5.8 and D.9.10.1		
	Broken connector body	Para's. D.9.5.8 and D.9.10.1		
	Unsecured connector mounting	Para. D.9.10.1		
	Painted antenna radome	Para. D.9.6		
	Scratched antenna radome	Para. D.9.7.d.		
	Cut, disturbed, exposed antenna radome	Replace microstrip antenna IAW para's D.9.5 and D.9.10		
	Torn, deteriorated, punctured gasket	Para's. D.9.5.5 and D.9.10.4		
	Frayed wires or insulation, burned or shorted conditions	Replace using standard shop procedures.		
	Functional fault	Para. D.9.11		

Inspection Point	Condition	Action	Remarks	Done
CCAs	Cracked bodies, loose terminals, broken leads, cold solder joints, or otherwise damaged or deteriorated parts	Replace using standard shop procedures.		
	Functional fault	IAW applicable section for the faulty CCA		
EMI Filter Module	Bent, broken, missing connector contacts. Broken connector body. Unsecured connector mounting.	Para. 3.6		
	Functional fault	Para. 3.6.8		

Additional remarks: _____

_____

_____

Inspected by: _____ Date: _____

SECTION IV.
M94 CONVENTIONAL MUZZLE VELOCITY SYSTEM (MVS), P/N 12950994

SECTION CONTENTS

		Page
D.4	M94 CONVENTIONAL MUZZLE VELOCITY SYSTEM (MVS), P/N 12950994.	D-9
D.4.1	GENERAL.	D-9
D.4.2	TEST EQUIPMENT AND SPECIAL TOOLS REQUIRED.	D-9
D.4.3	MATERIALS REQUIRED.	D-9
D.4.4	CLEANING.	D-9
D.4.5	REPAIR.	D-10
D.4.6	PAINTING.	D-10
D.4.7	TESTING.	D-11
D.4.8	TROUBLESHOOTING.	D-23
D.4.9	DATA BASE REQUIREMENTS.	D-23
D.4.10	REPROGRAMMING.	D-23
D.4.11	FINAL TESTING BEFORE STORAGE.	D-23

D.4 M94 CONVENTIONAL MUZZLE VELOCITY SYSTEM (MVS), P/N 12950994

D.4.1 General

This section provides additional maintenance requirements for the M94 Muzzle Velocity System (MVS), P/N 12950994, if received as a complete set, at the depot level.

D.4.2 Test Equipment and Special Tools Required

Test equipment and special tools requirements are listed in Table D-2. Unless otherwise specified, the test equipment and special tools listed below will be used for testing the M94 MVS. Each commercially available item of test equipment can be replaced by equipment equivalent to that listed.

D.4.3 Materials Required

Refer to para. 3.1.3 in Chapter 3 of this manual.

D.4.4 Cleaning

Refer to para. 3.1.4 in Chapter 3 of this manual.

D.4.5 Repair

Repair defective parts that were noticed during preshop analysis (para. D.3). For repair procedures and maintenance information refer to Chapter 3 of this manual.

D.4.6 Painting

Refer to para. 3.1.6 in Chapter 3 of this manual.

Table D-2. Test Equipment and Special Tools Required

Nomenclature	Part/Spec. No.	Figure
Coaxial Cable, BNC, Male-To-Male, 50 Ω	Local Manufacture	N/A
Coaxial Cable, SMA, Male-To-Male, 50 Ω	Local Manufacture	N/A
WR90/SMA Female Adapter	Midwest Microwave, 3625	C-27, 49
Microwave Frequency Counter	ElP Model 535	C-27, 26
Digital Multimeter	Fluke, Model 77-2	C-27, 5
Electronic Equipment Tool Kit	PPL863	C-27, 11
Function Generator	Wavetek, Model 178	C-27, 41
Oscilloscope	Hewlett Packard, Model 1070B	C-27, 44
Power Supply, DC (0-40 V, 5 A)	Lambda, LLS-9040	C-27, 24
Test Cable, Power	RSL, P/N WA6709092-0	C-27, 28
Test Cable, M94 MVS	P/N WA6708147-0	C-27, 50
Serial Communication Cable, M94 MVS	P/N WA6708180-0	C-27, 51
Test Doppler Simulator	P/N AY6708172-0	C-27, 52
Standard Gain Horn	Narda, Model 640	C-27, 18
Personal Computer	IBM 486 PC or compatible	C-27, 46
M94 Data Base Reprogram Software	RSL, Software Diskette P/N RD6708181-0	C-27, 53
ESD Work Station Kit	M87893-02	C-27, 13
Doppler Simulator	AY6706690-0	C-27, 22

D.4.7 Testing

NOTE

Hereafter, the MVS will be referred to as the Unit Under Test (UUT).

D.4.7.1 Preparation for Test

The test is conducted on an assembled UUT. The test setup is as shown in Figure D-1. Figures D-2. through D-5. are detailed illustrations of the special testers and test cables.

a. Energize power supply and adjust to +28±0.5Vdc. Deenergize power supply.

b. Set Test Doppler Simulator AY6708172-0 switch PS/BAT to PS position.

c. Set Test Doppler Simulator AY6708172-0 switch EXTERNAL/INTERNAL to INTERNAL position.

d. Before connecting the UUT to the test setup, verify that the power supply is deenergized.

e. Connect the UUT to the test setup IAW Figure D-1.

D.4.7.2 System Test

D.4.7.2.1 System Test Procedures.

The test setup provided in Figure D-1. shows the equipment used and cable hookup for the first procedural step. Refer to Figures D-2. through D-6. for schematics of the special testers and test cables.

D.4.7.2.2 Test Data Sheets

The test data sheets in Table D-3., are to be reproduced locally, as required, for recording the test results. The test data sheets must be completed each time a test section is performed. The completed test data sheets shall be retained and used as a troubleshooting aid.

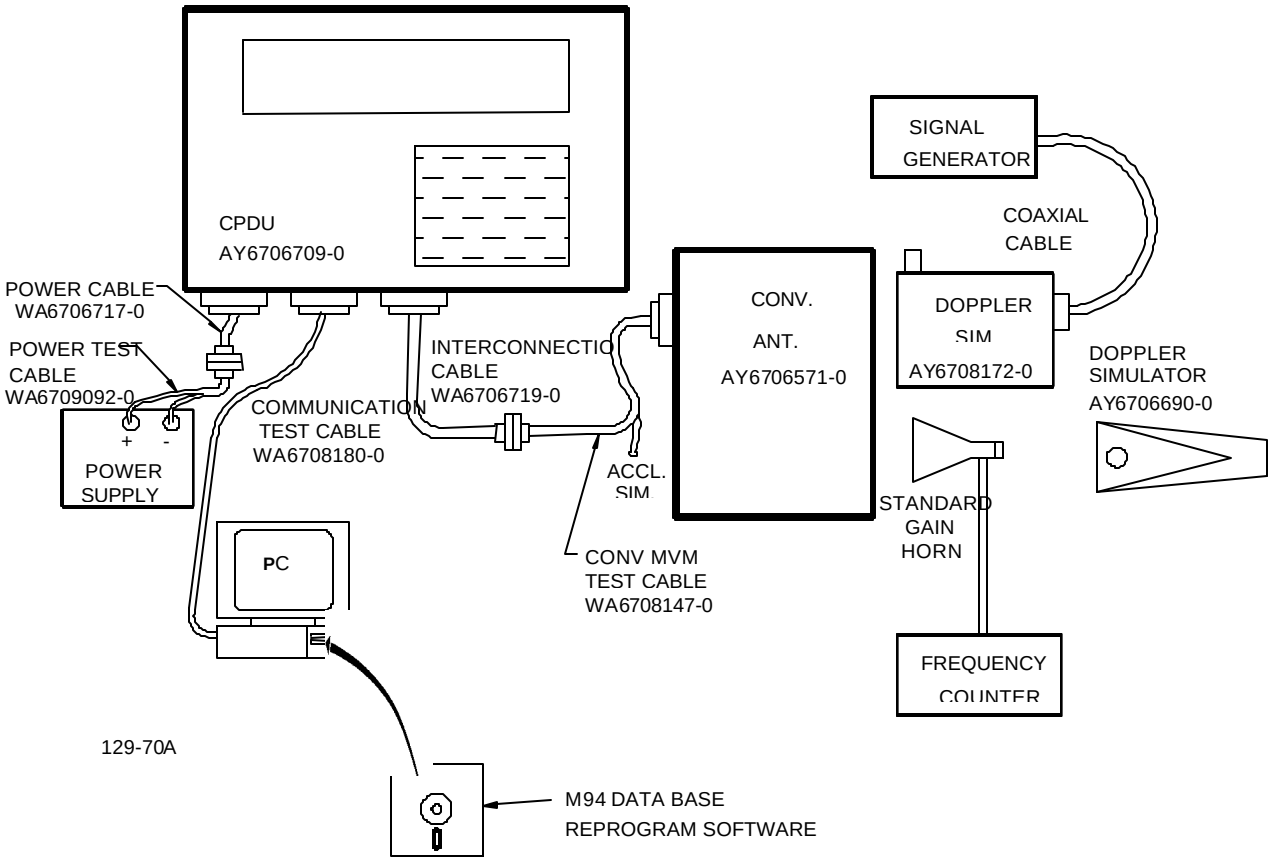

Figure D-1. M94 MVS Test Setup

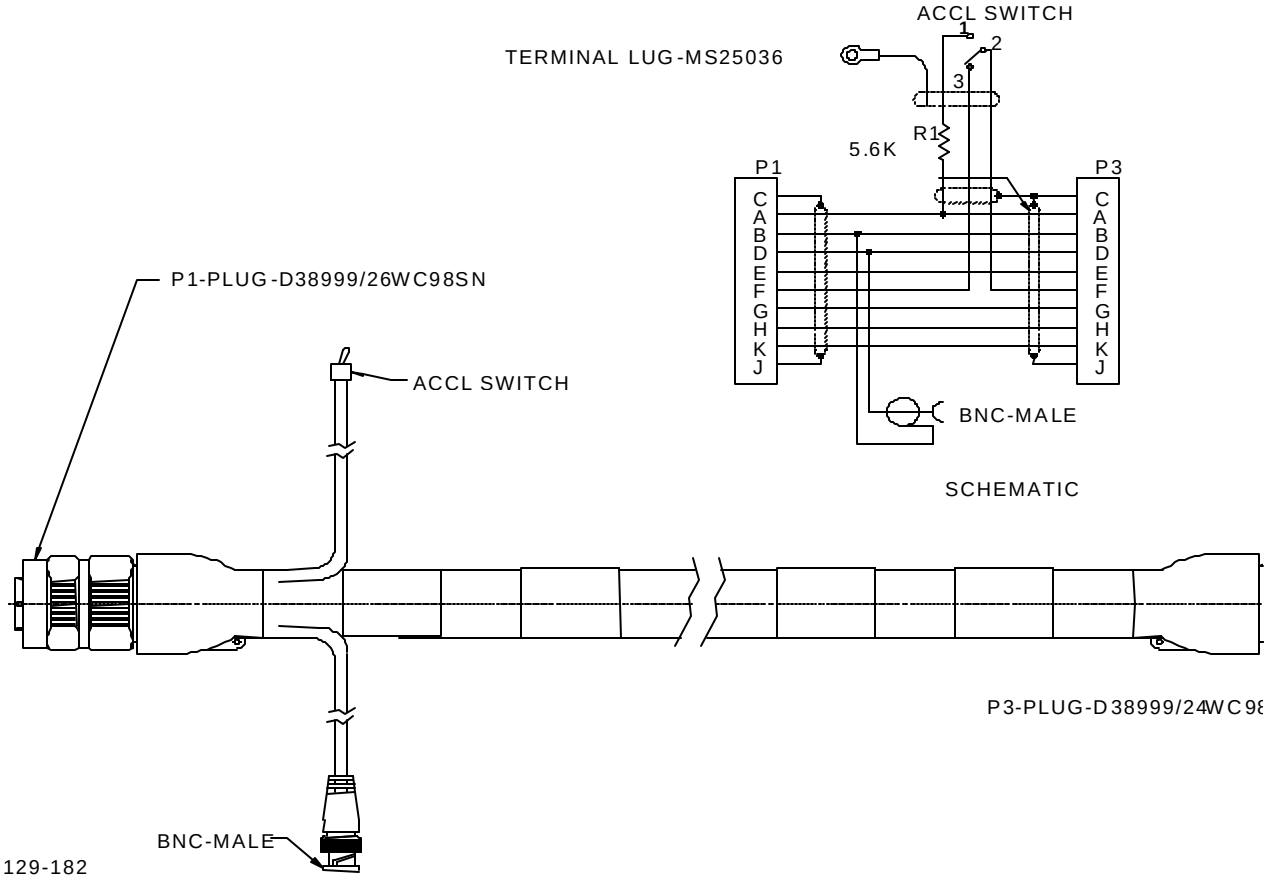

Figure D-2. M94 MVS Test Cable

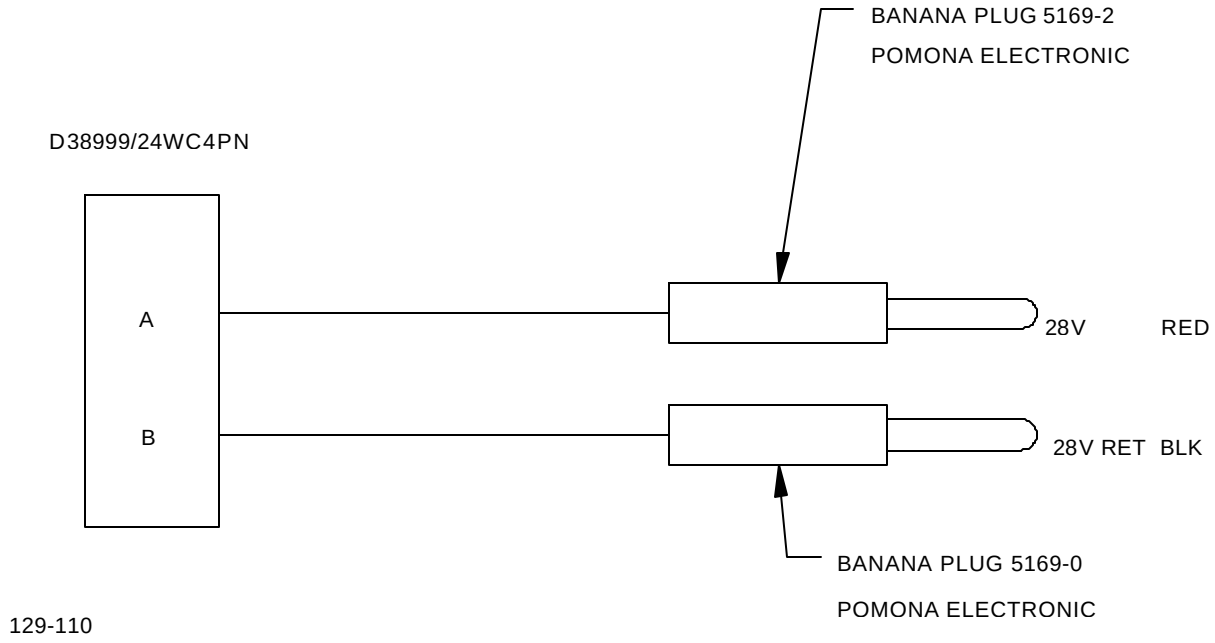

Figure D-3. M94 MVS Power Test Cable

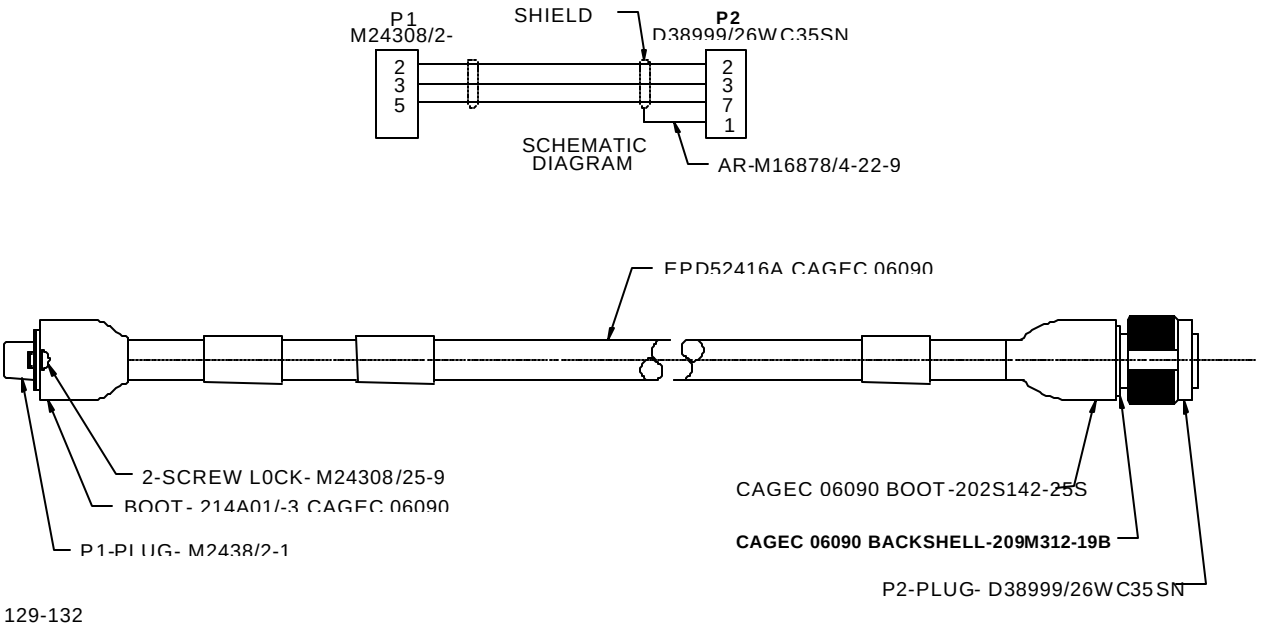

Figure D-4. M94 MVS Communication Cable

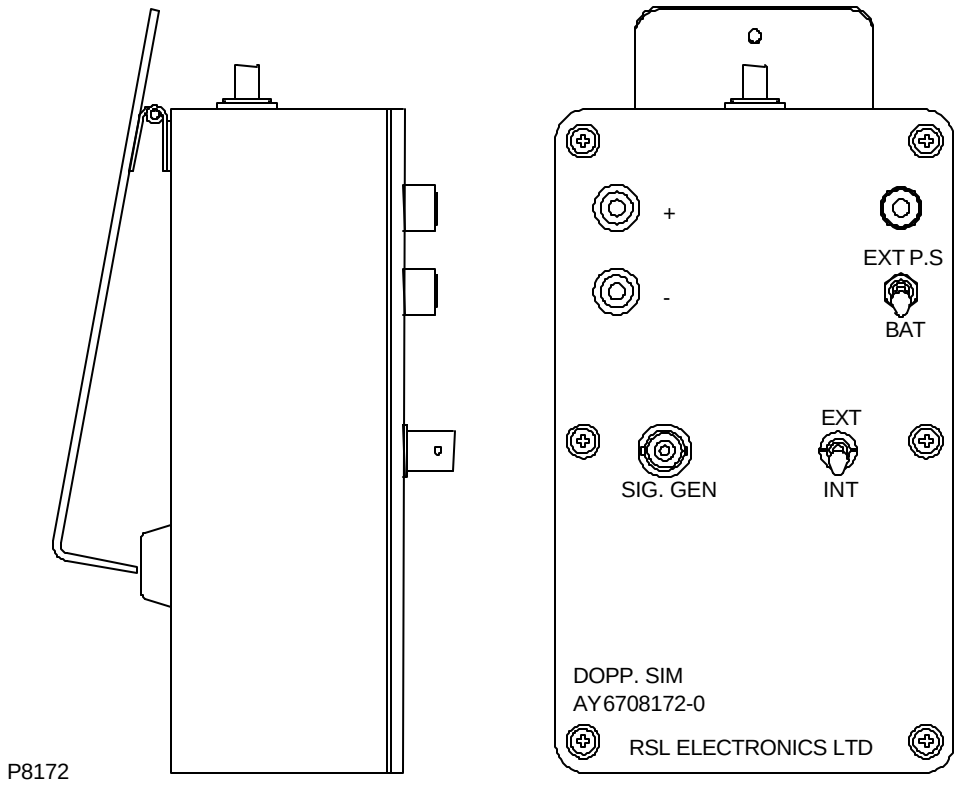

Figure D-5. Test Doppler Simulator

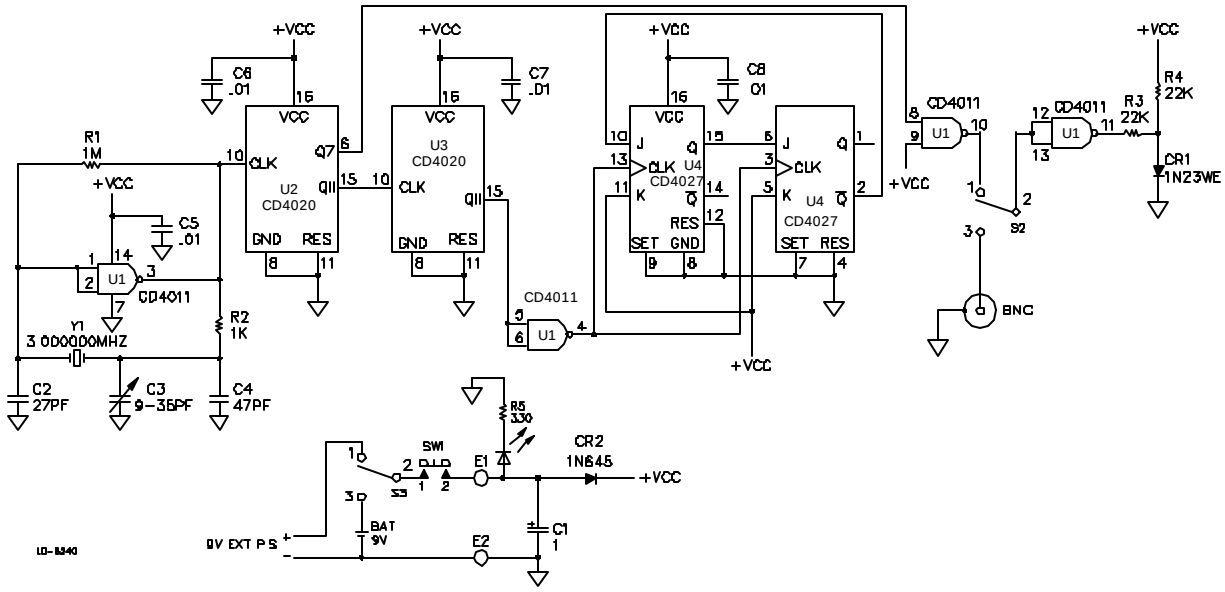

Figure D-6. Test Doppler Simulator Schematic

D.4.7.2.3 Self Test

a. Energize power supply and other test equipment.

b. Turn on Control Processor and Display Unit (CPDU).
* A built In test BIT will be performed automatically.

c. Verify screen on the display:

```
** Mission Data **                    Gun Screen
Howitz Type: WWWWWW Howitz No.:   HHHH
Tube No.: TTTTT              MM/DD/YY:mm/dd/yy
1-Edit          Pg+: Pjctl              Pg-: Prplt
```

d. Press TST Key - Test screen will be displayed.

```
** Test **
1 - CPDU Test
2 - System Test
```

e. Press 1 and CPDU TEST will be performed.

```
** CPDU Status **
Testing, Wait . . .
```

f. Verify that the following screen is displayed:

```
** CPDU Status **
      OK
Press any key to continue
```

g. Press any key except hot keys.

```
** CPDU Test ** ROM/EEROM Ver. X.X/Y.Y
1 – Display
2 - Keyboard
3 - Automatic Reset
```

where: X.X - Current Software version.
Y.Y - Current Data Base version.

D.4.7.2.4 Display Test

a. Press 1. Display Test screen will appear.

```
!"#$%&'()*+,-./0123456789:;<=>?@ABCDEFGH
IJKLMNOPQRSTUVWXYZ[¥]^_´abcdefghijklmnop
qrstuvwxyz| } {® ¬. PRESS ONCE TO DARKEN
DISPLAY, TWICE TO EXIT DISPLAY TEST.
```

b. Verify the characters displayed by the CPDU under test exactly match the screen shown above.

c. Press any key. Verify display goes dark. Verify there are no bad fields on the display. Adjust the CONT knob to verify that there are no missing pixels on the displayed screen.

d. Press any key. CPDU displays CPDU TEST screen.

D.4.7.2.5 Keyboard Test

a. Press 2. KEYBOARD TEST will appear on the screen:

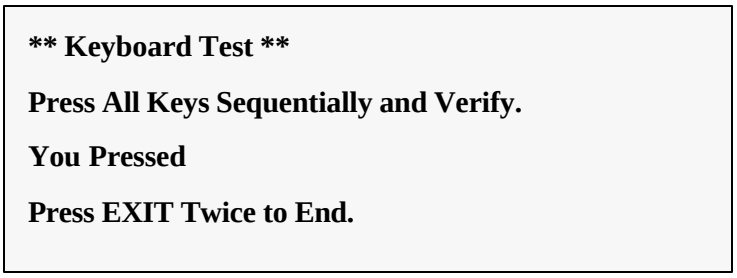

b. Press each key on the keyboard twice. Verify after pressing each key that the key nomenclature appears after the words “You Pressed”.

c. Press EXIT twice and return to CPDU Test screen.

D.4.7.2.6 Automatic Reset Test

a. Press 3. Verify that Automatic Reset test screen is displayed.

b. Verify that the display goes blank after two seconds and then the system performs a self test. Verify Mission Data screen is then displayed.

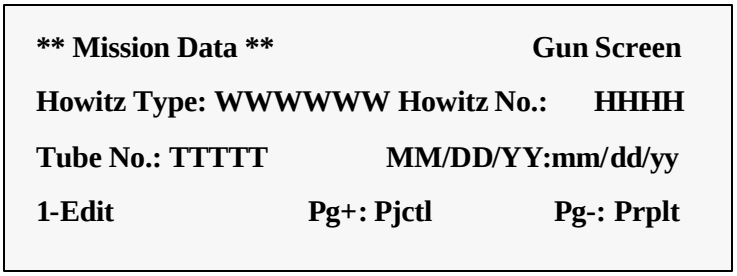

D.4.7.2.7 System Test

a. Press TST button. Verify Test screen is displayed.

```
** Test **
1 - CPDU Test
2 - System Test
```

b. Press 2. Verify System Test screen is displayed.

```
** System Test **
Activate Doppler Simulator In Front
Of Antenna. Press ENT To Measure And
Verify MV (712 " 50):          1-ABORT
```

c. Verify current measure on power supply is 650±100mADC.

d. Press ENTER.

e. Verify that the power supply current reading is 1500±150mA.

NOTE

The system might incidentally trigger and abort test. Repeat frequency and MV test to ensure correct measurement.

f. Perform RF frequency measurement using the frequency counter. Verify frequency is 10.525GHz±1MHz.

g. Hold the Doppler simulator AY6706690-0 in front of the conventional transceiver. Activate the Doppler simulator.

h. Verify on the CPDU, MV is 712±50m/sec.

D.4.7.2.8 Mission Measure Test

a. Press MSN key. Gun Screen will be displayed.

**** Mission Data ** Gun Screen**
Howitz Type: WWWWWW Howitz No.: HHHH
Tube No.: TTTTT MM/DD/YY:mm/dd/yy
1-Edit Pg+: Pjctl Pg-: Prplt

b. Enter EDIT mode and select the following data:

Howitz Type	-	M109A5
Howitz No.	-	1234
Tube No.	-	56789
MM/DD/YY	-	actual date
Pjctl Type	-	M687A1
Wt	-	4 squares
Fuse	-	M557
Prplt Type	-	M203
Chg	-	8R
Lot	-	01234567890ABCDEF
Temp	-	77.0°F

c. Place the test Doppler simulator AY6708172-0 on the antenna radome.

d. Turn on the signal generator. Set the functions on the signal generator to square wave, 5Vp-p, 2.5Vdc offset, frequency 57.5KHz±1Hz.

e. Set the test Doppler simulator AY6708172-0 INT/EXT switch to EXT.

f. Set test Doppler simulator PS/BAT switch to BAT.

g. Press MEAS key. Verify the MV MEASURE screen is displayed.

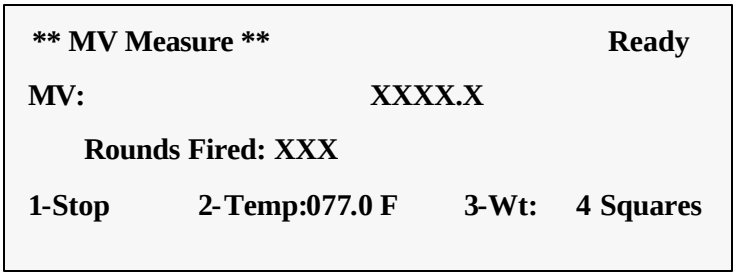

h. Push ACCL. SIM button on the test cable WA6708147-0. Verify “measure LED” on CPDU is on for approximately 2 sec.

i. Verify measured MV is 818.1±0.6m/sec.

j. Tap the transceiver assembly back cover using plastic hammer to activate the acceleration switch. Verify “measure LED” on CPDU is on for approximately 2 sec. Verify measured MV is 818.1±0.6m/sec.

k. Deenergize CPDU, power supply, and other test equipment.

End of Test

Table D-3. M94 MVS Test Data Sheet

Para.	Expected Result	Actual Result	Remarks
D.4.7.2.3c.	Mission Data Gun Screen		
D.4.7.2.3e.	ROM/EEPROM Ver.		
D.4.7.2.4b.	All characters on screen match Figure in para. D.4.7.2.4		
D.4.7.2.4c.	Display goes dark		
D.4.7.2.5b.	Keyboard work properly		
D.4.7.2.6b.	Automatic reset is OK		
D.4.7.2.7c.	650±100mA		
D.4.7.2.7e.	1500±100mA		
D.4.7.2.7f.	10.525±1MHz		
D.4.7.2.7h.	712±50m/sec		
D.4.7.2.8f.	818.1±0.6m/sec		
D.4.7.2.8g.	818.1±0.6m/sec		

Date: _____

Tested by: _____

Inspected by: _____

D.4.8 Troubleshooting

For troubleshooting of a complete M94 MVS set refer to para. 3.1.13. in Chapter 3 of this manual.

D.4.9 Data Base Requirements

The serviceable M94 MVS set shall be returned to service with the latest version of Fire Control Input (FCI) data base, and an empty Muzzle Velocity Variation (MVV) records table.

D.4.10 Reprogramming

NOTE

This requirement applies, if the database has failed during testing.

Before storing in the stock room, the CPDU FCI database must be reprogrammed with the latest version of Fire Control Input, and the MVV record table must be erased. For reprogramming and erasing procedures refer to Chapter 4 of this manual.

D.4.11 Final Testing Before Storage

Perform the final testing IAW para. D.4.7.2.1 through D.4.7.2.7

SECTION V.

CONTROL PROCESSOR AND DISPLAY UNIT (CPDU) ASSEMBLY, P/N AY6706709-0

SECTION CONTENTS

		Page
D.5	CONTROL PROCESSOR AND DISPLAY UNIT (CPDU) ASSEMBLY, P/NAY6706709-0.	D-24
D.5.1	GENERAL.	D-24
D.5.2	REPAIR AND MAINTENANCE.	D-24
D.5.3	TESTING AND TROUBLESHOOTING.	D-24
D.5.4	DATA BASE REQUIREMENTS.	D-24
D.5.5	REPROGRAMMING FOR STORAGE.	D-25
D.5.6	FINAL TESTING BEFORE STORING.	D-25

D.5 CONTROL PROCESSOR AND DISPLAY UNIT (CPDU) ASSEMBLY, P/NAY6706709-0.

D.5.1 General

This section provides additional maintenance requirements for the M94 Muzzle Velocity System (MVS) CPDU, P/N AY6706709-0 at depot level. Source, maintenance and recoverability codes are listed below:

U.S. Army	PAOFD
U.S. Marine Corps	PAOHD

D.5.2 Repair and Maintenance

For repair procedures and maintenance information refer to Section II in Chapter 3 of this manual.

D.5.3 Testing and Troubleshooting

Initial testing and troubleshooting of the CPDU set shall be performed IAW para. 3.2.8 in Chapter 3 of this manual.

D.5.4 Data Base Requirements

At depot level, a serviceable CPDU shall be stored with the latest version of Fire Control Input (FCI) database and an empty Muzzle Velocity Variation (MVV) records table.

D.5.5 Reprogramming For Storage

NOTE

This requirement applies, if the database was found corrupted during testing.

Before storing in the stock room, the CPDU FCI database must be reprogrammed with the latest version, and the MVV record table must be erased. For reprogramming and erase procedures refer to Chapter 4 of this manual.

D.5.6 Final Testing Before Storing

Before storing, the CPDU shall be tested IAW para. 3.2.8 in Chapter 3 of this manual.

SECTION VI.

POWER SUPPLY MODULE, P/N AY6706704-0

SECTION CONTENTS

		Page
D.6	POWER SUPPLY MODULE, P/N AY6706704-0.	D-26
D.6.1	GENERAL.	D-26
D.6.2	TEST EQUIPMENT AND SPECIAL TOOLS REQUIRED.	D-27
D.6.3	MATERIALS REQUIRED.	D-27
D.6.4	GENERAL REPAIR REQUIREMENTS.(REFER TO FIGURE D-7.)	D-28
D.6.5	POWER SUPPLY MODULE DISASSEMBLY.	D-28
D.6.6	CLEANING.	D-34
D.6.7	VISUAL INSPECTION.	D-34
D.6.8	REPAIR.	D-34
D.6.9	PAINTING.	D-34
D.6.10	POWER SUPPLY MODULE REASSEMBLY.	D-34
D.6.11	TESTING.	D-35
D.6.12	TROUBLESHOOTING.	D-43
D.6.13	FINAL TESTING.	D-48

D.6 POWER SUPPLY MODULE, P/N AY6706704-0

D.6.1 General

This section provides repair procedures and maintenance information for the power supply module, P/N AY6706704-0. Source, maintenance, and recoverability code is PAFDD.

D.6.2 Test Equipment and Special Tools Required

Test equipment and special tool requirements are listed in Table D-4. Unless otherwise specified, the test equipment and special tools listed below will be used for testing the power supply module. Each commercially available item of test equipment can be replaced by equipment equivalent to that listed.

Table D-4. Test Equipment and Special Tools Required

Nomenclature	Part/Spec. No.	Figure
Coaxial Cable, BNC, Male-To-Male, 50 Ω	Local Manufacture	N/A
Digital Multimeter	Fluke, Model 77-2	C-27, 5
Digital Multimeter	Hewlett Packard, Model 3478A	C-27, 43
Electronic Equipment Tool Kit	PPL863	C-27, 11
Power Supply, DC (OAOV, 5A)	Lambda, LLS-9040	C-27, 24
Oscilloscope	Hewlett Packard, Model 1070B	C-27, 44
Test Set, CPDU Power Supply	RSL, P/N AY6707951-0	C-27, 54
ESD Work Station Kit	M87893-02	C-27, 13

D.6.3 Materials Required

Repair materials and other consumable items required are listed in Table D-5.

Table D-5.Materials Required

Nomenclature	Part/Spec. No.	Appendix F Item No.
Adhesive	MIL-A-46146, Type III	19
Insulation Compound	MIL-I-46058 TYPE 1B31	9
Solder	SN63WRMAP3	23
Lacing Tape	MIL-T-43435-B3/BLK	11
Sealing Compound	83-31	16
Primer	747-55	17
Insulation Tubing	M22129-22-N	25
Bus Wire	QQ-W-343/S-22-S1T	29
Antistatic Bag	3271576	33

D.6.4 General Repair Requirements. (Refer to Figure D-7)

The following general requirements apply to the repair of power supply module.

CAUTION

The power supply module contains components subject to damage by electrostatic discharge (ESD). Use approved grounding procedures before touching, removing, or inserting circuit card assembly (CCA).

a. Ensure that components are properly oriented before installing.

b. Square mounting pad designates:

1. Pin 1 of integrated circuit
2. Emitter of transistor
3. Cathode of diode
4. Positive lead of capacitor

c. Do not bend leads of components Q9, L7, T3, T4 and T5.

d. Tie components C23, C33, C43, C61, C76, C107 using MIL-T- 43435-B3 lacing tape.

e. Bond all capacitors, transformers and chokes to printed wiring board (PWB) with MIL-A-46146, Type III adhesive before applying insulation compound.

f. Use only SN63WRMAP3 tin/lead solder or approved equivalent.

CAUTION

Insulation compound must not be applied to any connector pins. Inadvertent application of compound to connector pins may require replacement of connector.

g. Apply uniform coating of MIL-I-146058 TYPE 1B31 insulation compound 0.003±0.002 in. thick, where compound has been removed during CCA repairs.

h. Do not apply insulation compound to mounting holes on either side of PWB.

i. Connector must be mounted flush to board. No angle is allowed.

j. Apply primer MIL-S-22473 grade T and sealing compound MIL-S-22473 grade CV to threads.

D.6.5 Power Supply Module Disassembly

D.6.5.1 Removal

If necessary, remove power supply module IAW para. 3.2.5 in Chapter 3 of this manual.

NOTE

Disassemble power supply module only to the extent necessary to perform the required maintenance task.

D.6.5.2 Removal of Covers (Refer to Figure D-7)

a. Remove five screws (1) and remove front cover (2).

b. Remove four screws (12), one screw (13), and remove back cover (15).

D.6.5.3 CCA Disassembly (Refer to Figure D-7)

a. Remove two screws (3), two flat washers (4), two lock washers (5), and two nuts (6).

b. Remove spacer (14).

c. Remove 11 screws (8), 11 lock washers (9), and 11 flat washers (10).

d. Remove CCA (7) from housing (11).

D.6.5.4 TO-5 Heat sink Disassembly (Refer to Figure D-7)

a. Remove screw (20) and flat washer (21).

b. Remove heat sink (17) and insulator (18) from CCA (7).

c. Using soldering iron, unsolder three leads of TO-5 component (16) from CCA (7).

d. Remove TO-5 component (16) and insulator (19) from CCA (7).

D.6.5.5 TO-247 Disassembly (Refer to Figure D-7)

a. Using soldering iron, unsolder three leads of TO-247 component (22) from CCA (7).

b. Remove screw (24), flat washer (25), shouldered washer (23), flat washer (26) and nut (27) from TO-247 component (22).

c. Remove TO-247 component (22) from CCA (7).

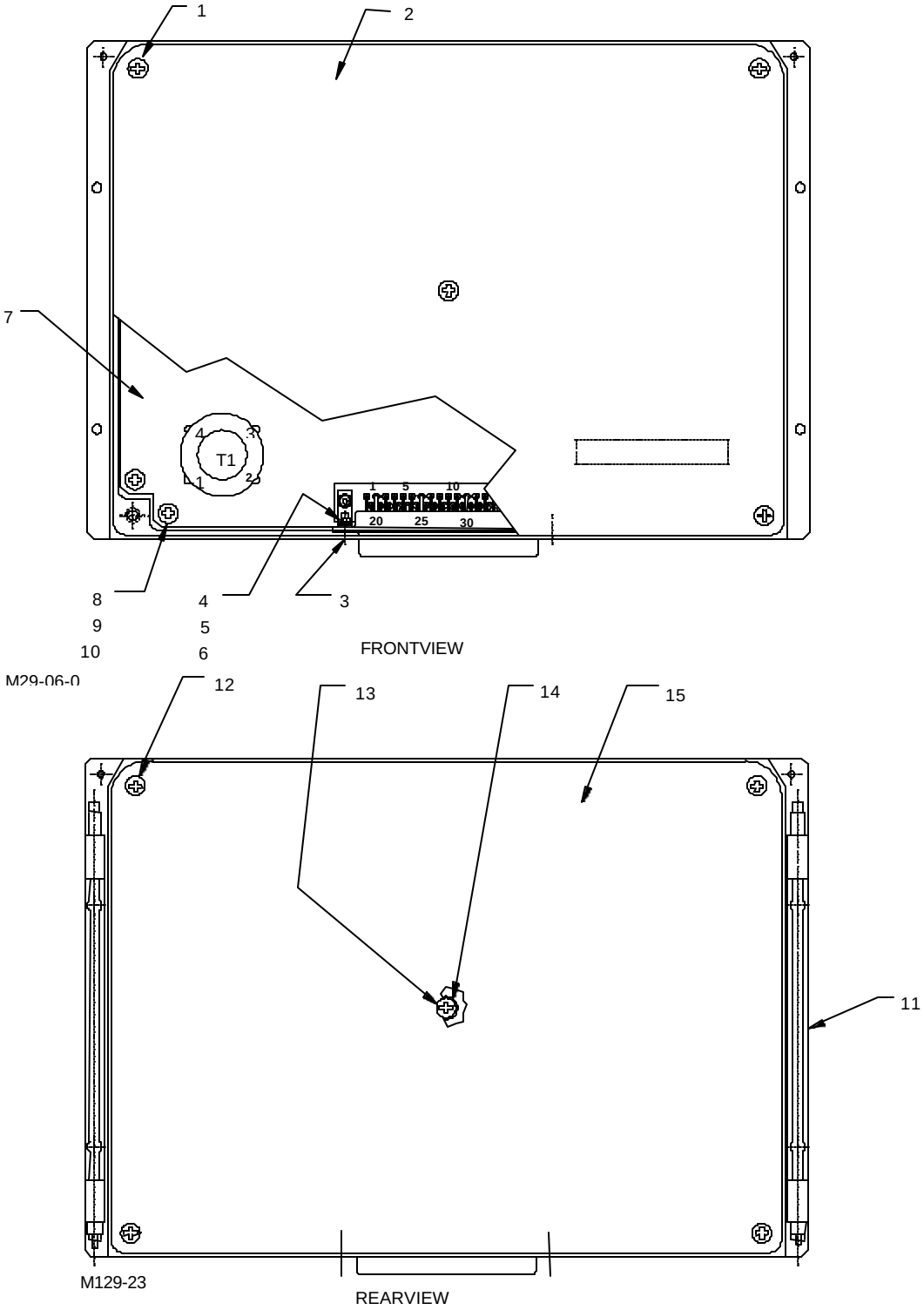

Figure D-7. Power Supply Module (Sheet 1 of 4)

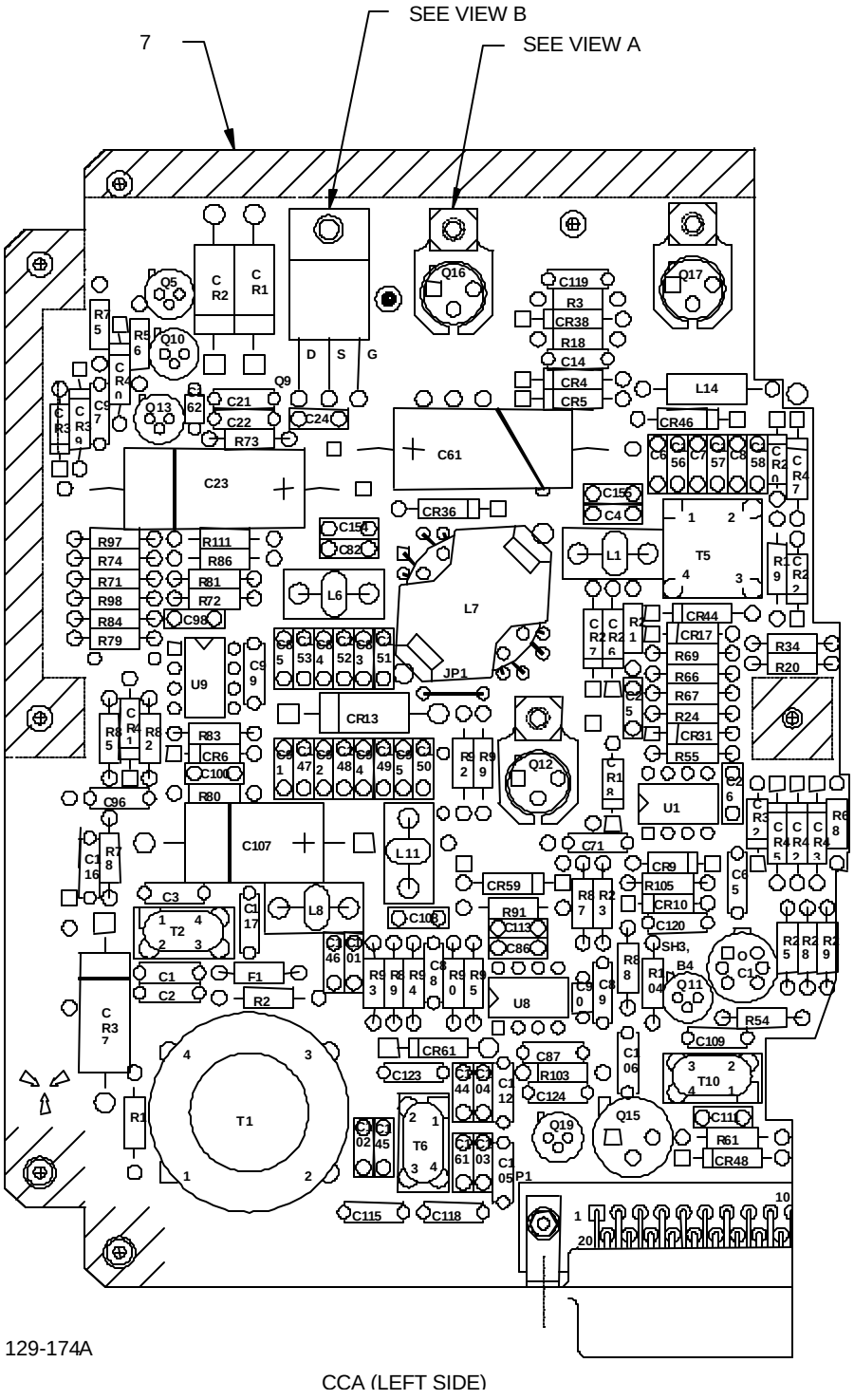

Figure D-7. Power Supply Module (Sheet 2 of 4)

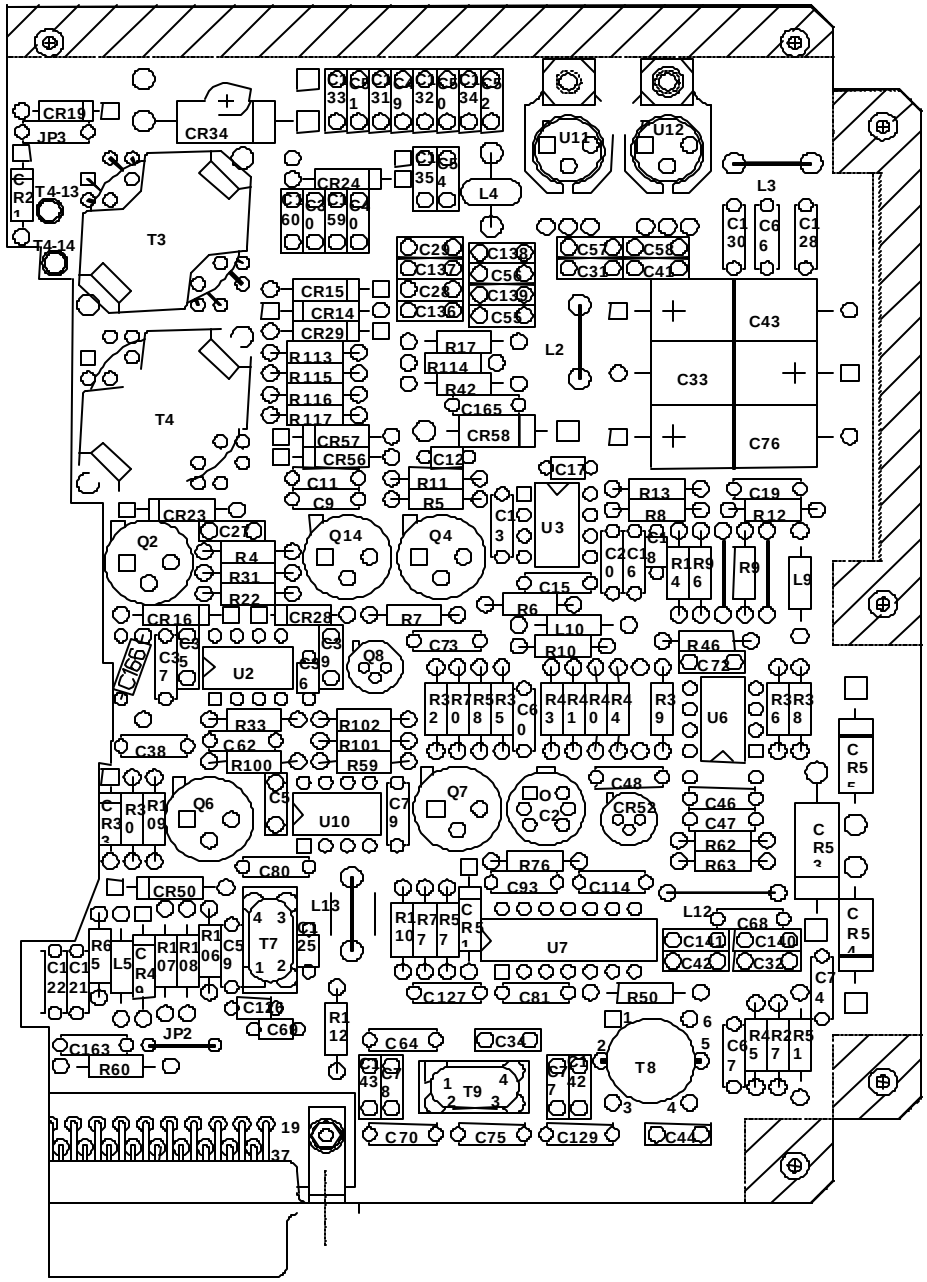

CCA (RIGHT SIDE)

Figure D-7. Power Supply Module (Sheet 3 of 4)

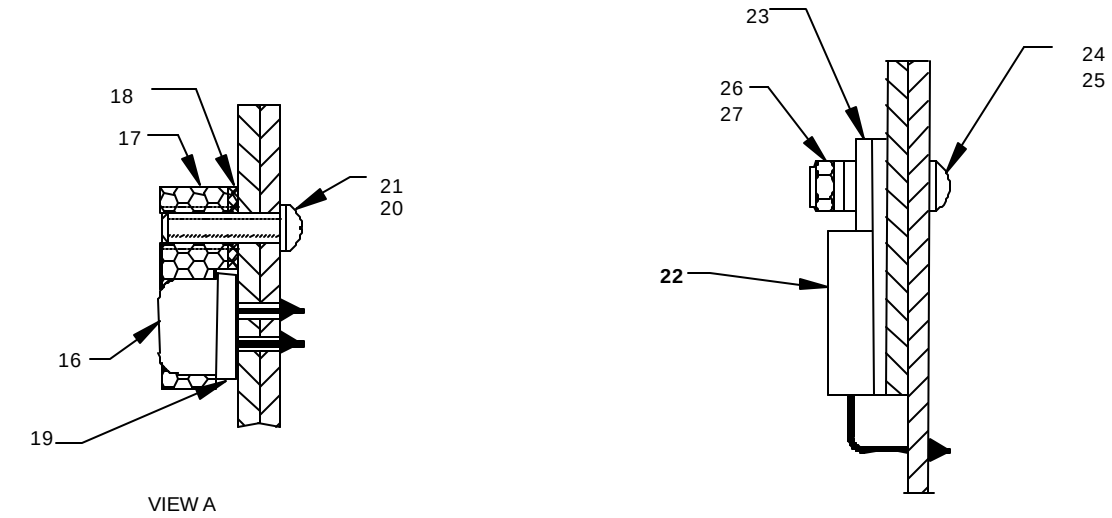

Figure D-7. Power Supply Module (Sheet 4 of 4)

D.6.6 CLEANING

Refer to para. 3.1.4 in Chapter 3 of this manual.

D.6.7 Visual Inspection (Refer to Figure D-7)

a. Inspect connector for damaged pins and foreign matter.

b. Inspect all components for secure attachment.

c. Inspect all parts for damage, wear, and deterioration.

d. Inspect all parts for nicks, scoring, dents, scratches, and broken runs.

e. Inspect all electronic components for indication of overheating, cracked bodies, loose terminals, broken leads, cold solder joints, and other indications of damage or deterioration.

D.6.8 Repair

Repair defective parts that were discovered during preshop analysis (para. D.3) and visual inspection (para. D.7.7).

D.6.9 Painting

No painting required on power supply module.

D.6.10 Power Supply Module Reassembly

D.6.10.1 TO-247 Reassembly (Refer to Figure D-7)

a. Place TO-247 component (22) on CCA (7).

b. Install and fasten screw (24), flat washer (25), shouldered washer (23), flat washer (26) and nut (27) on TO-247 component (22).

c. Using soldering iron, solder three leads of TO-247 component (22) to CCA (7).

D.6.10.2 TO-5 Heat sink Reassembly (Refer to Figure D-7)

a. Place TO-5 component (16) and insulator (19) on CCA (7).

b. Using soldering iron, solder three leads of TO-5 component (16) to CCA (7).

c. Install heat sink (17) and insulator (18) onto TO-5 component (16) using screw (20) and flat washer (21).

D.6.10.3 CCA Reassembly (Refer to Figure D-7)

a. Install CCA (7) into housing (11) using 11 screws (8), 11 lock washers (9) and 11 flat washers (10).

b. Install and fasten spacer (14) using two screws (3), two flat washers (4), two lock washers (5) and two nuts (6).

D.6.10.4 Installation of Covers (Refer to Figure D-7)

a. Install front cover (2) using five screws (1).

b. Install back cover (15) using four screws (12) and one screw (13).

D.6.10.5 Installation

When necessary, install power supply module IAW para. 3.2.6 in Chapter 3 of this manual.

D.6.11 Testing

CAUTION

The power supply module contains components subject to damage by electrostatic discharge. Use approved grounding procedures before touching, removing, or inserting CCA.

NOTE

Hereafter, the power supply module will be referred to as the Unit Under Test (UUT).

D.6.11.1 General

D.6.11.1.1 Power Supply Module Test Procedures

The test setup provided in Figure D-8., shows the equipment used and cable hookup for the test procedure. Figures D-9. and D-10. are detailed illustrations of the special testers.

D.6.11.1.2 Test Data Sheets

The test data sheets in Table D-6., are to be reproduced locally, as required, for recording the test results. The test data sheets must be completed each time a test section is performed. The completed test data sheets shall be retained and used as a troubleshooting aid.

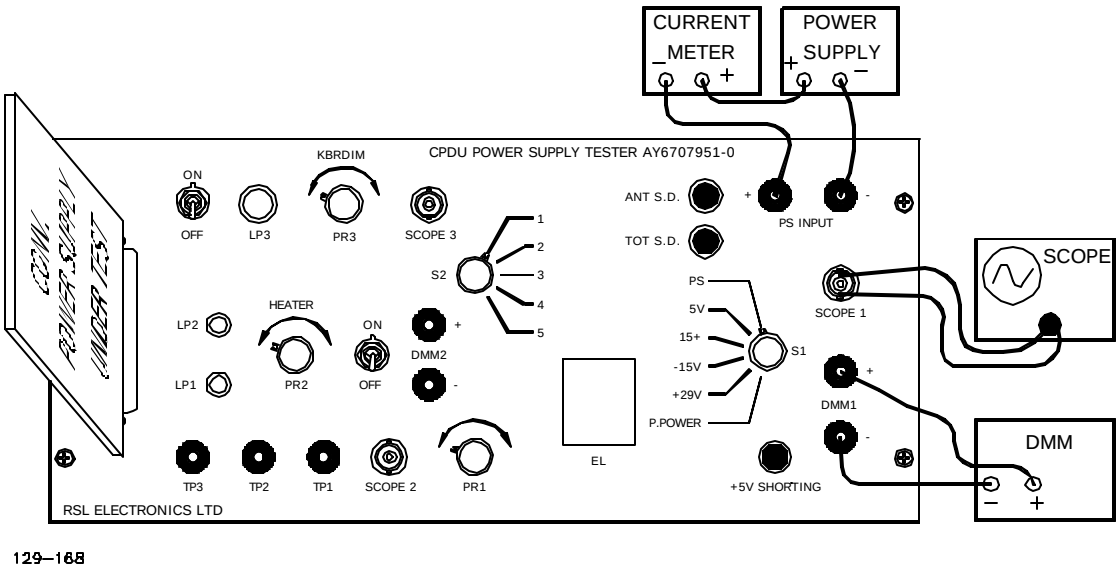

129–168

Figure D-8. Power Supply Module Test Fixture

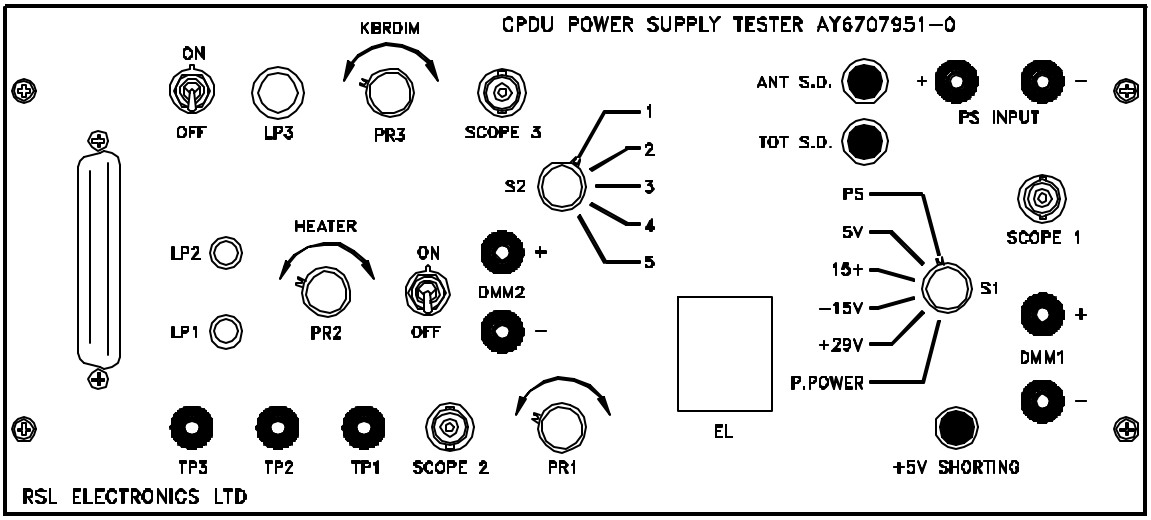

P7952

Figure D-9. Power Supply Module Test Fixture

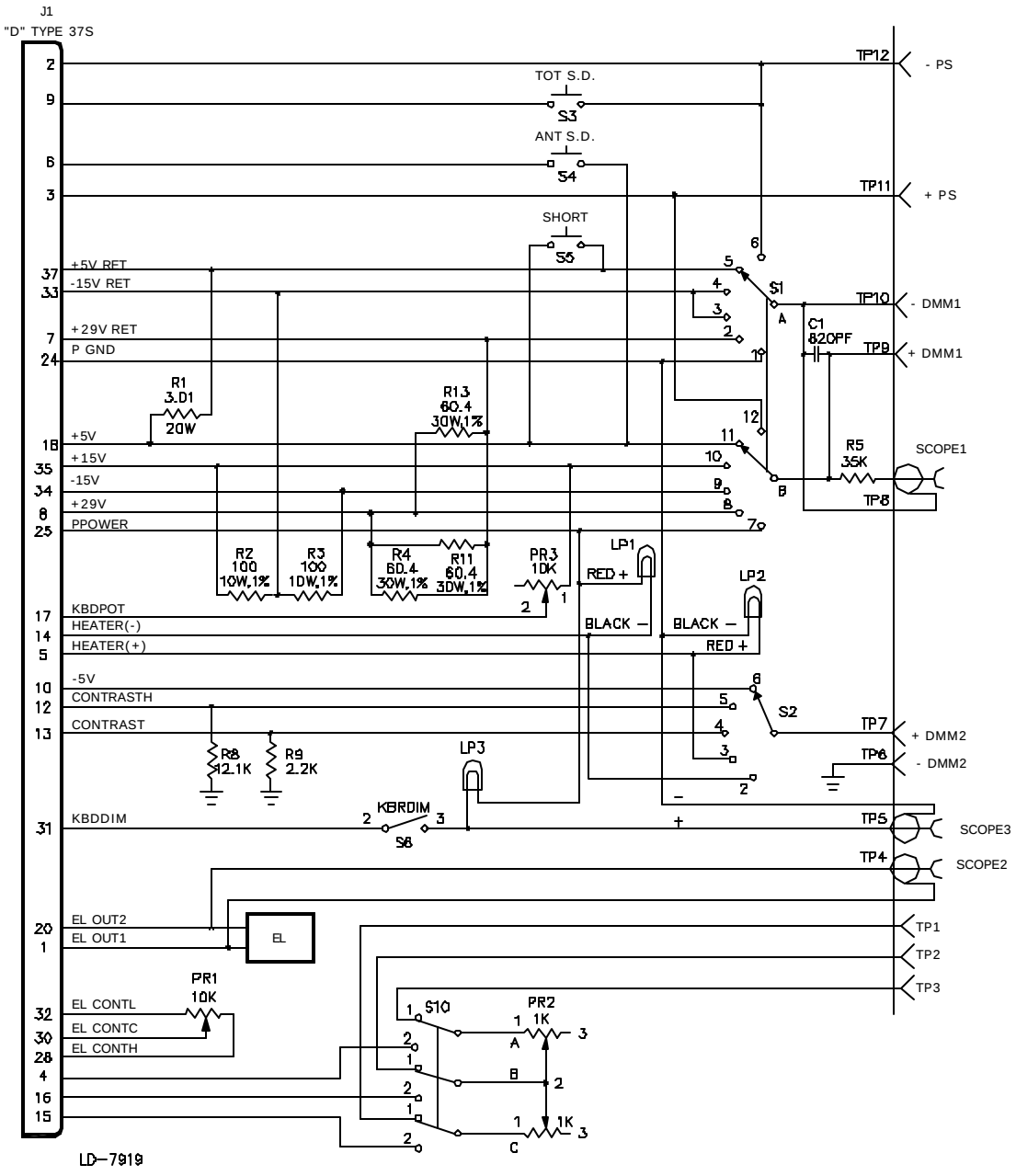

Figure D-10 Power Supply Module Test Fixture Schematic

D.6.11.2 Preparation for Test

The test is conducted on a disassembled UUT. The test setup is shown in Figure D-8. Figures D-9. and D-10. are detailed illustrations of the special testers.

a. Remove the UUT from higher assembly IAW para. 3.2.5 in Chapter 3 of this manual.
b. Energize and adjust digital multimeter (DMM) to measure DC volts.
c. Energize and adjust current meter to measure high DC current (10 Amp).
d. Set switch S1 on the test fixture to the PS position.
e. Set switch S2 on the test fixture to the 1 position.
f. Set switch KBRDIM on the test fixture to the OFF position.
g. Set the HEATER switch on the test fixture to OFF position.
h. Set potentiometer PR1 on the test fixture to maximum CCW.
i. Energize and adjust DC power supply to +28±1Vdc. Deenergize DC power supply.
j. Before connecting the UUT to the test setup, verify that the test equipment is deenergized.
k. Connect the UUT to the test setup IAW Figure D-8.

D.6.11.3 Functional Test

D.6.11.3.1 5V Output Test

Refer to para. D.6.12.1. for troubleshooting procedures.

a. Energize power supply and all other test equipment.
b. Set switch S1 to position 5V.
c. Verify the voltage measured by the DMM is +5±0.1Vdc.
d. Verify the ripple using the oscilloscope in AC mode is less than 100 mVp-p.
e. Verify by using the current meter, the power supply current is 900±300mA.

D.6.11.3.2 +15V Output Test

Refer to para. D.6.12.2. for troubleshooting procedures.

a. Set switch S1 to position +15V.
b. Verify the voltage measured by the DMM is +15±0.6Vdc.
c. Verify the ripple using the oscilloscope in AC mode is less than 100 mVp-p.

D.6.11.3.3 -15V Output Test

Refer to para. D.6.12.3. for troubleshooting procedures.

a. Set switch S1 to position -15V.
b. Verify the voltage measured by the DMM is -15±0.6Vdc.
c. Verify the ripple using the oscilloscope in AC mode is less than 100 mVp-p.

D.6.11.3.4 Transceiver Output Test

Refer to para. D.6.12.4. for troubleshooting procedures.

a. Set switch S1 to position +29V.

b. Press and hold ANT S.D. switch and verify voltage measured by the DMM is +29±1.5Vdc.

c. Verify the ripple using the oscilloscope in AC mode is less than 100 mVp-p.

Using the current meter, verify the current of the power supply is 2650±300mA. Release ANT S.D. switch.

D.6.11.3.5 High Input Voltage Test

Refer to para. D.6.12.5. for troubleshooting procedures.

a. Set switch S1 to the position PS.

b. Set power supply to +32±1Vdc.

c. Repeat the test as per paras. D.6.11.3.1 through D.6.11.3.4 without the ripple measurements and verify the measurements in accordance with applicable test data sheet limits.

d. Set power supply to +35±0.3Vdc.

e. Using DMM, verify the voltage on Q16/source is +33±1Vdc.

f. Press and hold ANT S.D. switch. Using DMM, verify the voltage on Q9/source is +33±1Vdc.

g. Set power supply to +32±1Vdc.

D.6.11.3.6 Low Input Voltage Test

Refer to para. D.6.12.5. for troubleshooting procedures.

a. Set switch S1 to the position PS.

b. Set power supply to +18±0.5Vdc.

c. Repeat the test per para. D.6.11.3.1. through D.6.11.3.4. without the ripple measurements and verify the measurements in accordance with applicable test data sheet limits.

D.6.11.3.7 Shutdown and Short Circuit Test

Refer to para. D.6.12.6. for troubleshooting procedures.

a. Set switch S1 to the position PS.

b. Set power supply to +28±1Vdc.

c. Set switch S1 to the position 5V.

d. Momentarily press the TOT S.D. switch and verify the voltage measured by DMM drops to 0±0.1Vdc.

e. Momentarily press the +5V SHORTING switch and verify that the unit is attempting to start.

f. Set switch S1 to position P.POWER and verify the voltage measured by the DMM is +27±1Vdc.

g. Using the oscilloscope in AC mode, verify the ripple is less than 200 Vp-p.

D.6.11.3.8 Reverse Polarity Test

Refer to para. D.6.12.7. for troubleshooting procedures.

a. Measure 1±0.3 Vdc over diodes CR1 and CR2.
b. Deenergize power supply.
c. Connect the power supply to the opposite polarity:
    1. Positive lead to “PS-”.
    2. Negative lead to “PS+”.
d. Energize the power supply and verify the current of the power supply measured by the multimeter is 0±0.1A.
e. Turn off the power supply.
f. Connect the power supply to the correct polarity:
    1. Positive lead to “PS+”.
    2. Negative lead to “PS-”.

D.6.11.3.9 Heater Circuit Test

Refer to para. D.6.12.7.1. for troubleshooting procedures.

a. Energize the power supply and connect the DMM to the DMM2 input on the test equipment.
b. Turn on the HEATER switch.
c. Set switch S2 to the position 1.
d. Turn switch PR2 CCW until the lights LP1 and LP2 turn ON.
e. Slowly turn switch PR2 CW to turn OFF LP1.
f. Verify the voltage measured by the DMM is +26±0.5Vdc.
g. Turn OFF the HEATER switch.
h. Using the DMM, measure the resistance between test points TP1 and TP2 and verify the resistance is 728±80Ω.
i. Set DMM to voltage measurement and connect to DMM2 input.
j. Set switch S2 to position 2. Turn on the HEATER switch.
k. Slowly turn switch PR2 CW to turn off LP2.
l. Verify the voltage measured by the DMM is 0.5Vdc.
m. Turn off the HEATER switch.
n. Using the DMM, measure the resistance between test points TP1 and TP2 and verify the resistance is between R+45Ω and R+115Ω, where R is the measured resistance in para. D.6.11.3.9.h.

D.6.11.3.10 Electro-Luminescence (EL) Circuit Test

Refer to para. D.6.12.8. for troubleshooting procedures.

a. Connect the oscilloscope to the Scope 2 input on the test equipment.
b. Turn switch PR1 and verify the EL light is lit at variable intensities.

c. Using the oscilloscope, verify the period of the wave is 2.5±0.4msec, and when switch PR1 is turned, the amplitude varies between 0 to 300 Vp-p minimum.

d. Turn switch PR1 maximum CCW.

D.6.11.3.11 Keyboard Illumination Circuit Test

Refer to para. D.6.12.9. for troubleshooting procedures.

a. Connect the oscilloscope to the Scope 3 input on the test equipment and turn on the KBRDIM switch.

b. Turn switch PR3 CW and CCW and verify the light is lit at variable intensities.

c. Measure the duty cycle using the oscilloscope. Verify the duty cycle varies between 60% and 90% minimum.

d. Turn off the KBRDIM switch.

D.6.11.3.12 Contrast Circuit Test

Refer to para. D.6.12.10. for troubleshooting procedures.

a. Set DMM to Voltage measurement and connect to DMM2 input.

b. Set switch S2 to position 4. Measure the voltage using the DMM +2.5±0.1Vdc.

c. Set switch S2 to position 5. Measure the voltage using the DMM -5.1±0.5Vdc.

d. Set switch S2 to position 3. Measure the voltage using the DMM V/2±0.1Vdc, where V is the voltage measured in para. D.6.11.3.12.c.

D.6.11.3.13 Starting Range Test

Refer to para. D.6.12.11. for troubleshooting procedures.

a. Connect the DMM to the DMM1 input at the correct polarity.

b. Set switch S1 to position 5V.

c. Decrease voltage of the power supply, until the voltage measured by the DMM decreases to 0±0.1Vdc.

d. Set switch S1 to position PS and verify the voltage is +15±1Vdc.

e. Set switch S1 to position 5V.

f. Increase voltage of the power supply until the voltage measured by the DMM increases to +5±0.1Vdc.

g. Set switch S1 to position PS and verify the voltage is +16±1Vdc.

D.6.11.3.14 Deenergize Power Supply and All Test Equipment

END OF TEST

Table D-6. Power Supply Module Test Data Sheet

SER. NO. _____

Power Supply Voltage: 28Vdc				Power Supply Voltage: 32Vdc D.6.11.3.5.			Power Supply Voltage: 18Vdc D.6.11.3.6.		
Para	**Required**	**Mea sured**	**Notes**	**Required**	**Mea sured**	**Notes**	**Required**	**Mea sured**	**Notes**
D.6.11.3.1.c.	+5±0.1Vdc			+5±0.1Vdc			+5±0.1Vdc		
D.6.11.3.1.d.	100mVp-p max			Not Applicable			Not Applicable		
D.6.11.3.1.e.	900±300mA			800±200mA			1500±400mA		
D.6.11.3.2.b.	+15±0.6Vdc			+15±0.6Vdc			+15±0.6Vdc		
D.6.11.3.2.c.	100mVp-p max			Not Applicable			Not Applicable		
D.6.11.3.3.b.	-15±0.6Vdc			-15±0.6Vdc			-15±0.6Vdc		
D.6.11.3.3.c.	100mVp-p max			Not Applicable			Not Applicable		
D.6.11.3.4.b.	+291.5Vdc			+29±1.5Vdc			+29±1.5Vdc		
D.6.11.3.4.c.	100mVp-p max			Not Applicable			Not Applicable		
D.6.11.3.4.d.	2650±300mA			2300±300mA			4700±600mA		

Para	**Required**	**Mea-sured**	**Notes**	**Para**	**Required**	**Mea-sured**	**Notes**
D.6.11.3.5.e.	+33±1Vdc			D.6.11.3.9.l.	0±0.5Vdc		
D.6.11.3.5.f.	+33±1Vdc			D.6.11.3.9.n.	R+45Ω to R+115Ω		
D.6.11.3.7.d.	0±0.1Vdc			D.6.11.3.10.b.	EL is lit at variable intensities		
D.6.11.3.7.e.	Power Supply is attempting to start			D.6.11.3.10.c.	2.5±0.4msec 0 to 300 Vp-p min		
D.6.11.3.7.f.	+27±1Vdc			D.6.11.3.11.b.	light is lit at variable intensities		
D.6.11.3.7.g.	200mVp-p max			D.6.11.3.11.c.	60% to 90% min		
D.6.11.3.8.a.	1±0.3Vdc			D.6.11.3.12.b.	+2.5±0.1Vdc		
D.6.11.3.8.d.	0±0.1A			D.6.11.3.12.c.	-5.1±0.5Vdc		
D.6.11.3.8.e.	LP1 & LP2 are on			D.6.11.3.12.d.	-V/2±0.1Vdc		
D.6.11.3.9.f.	+26±0.5Vdc			D.6.11.3.13.d.	+15±1Vdc		
D.6.11.3.9.h.	728±80Ω			D.6.11.3.13.g.	+16±1Vdc		

Date: _____
Tested by: _____
Inspected by: _____

D.6.12 Troubleshooting

This paragraph contains the troubleshooting procedures for UUT failures detected during testing. It is arranged in the sequence of test steps, and provides information on additional test steps required for the malfunction isolation. Refer to FO-2 for schematic diagram. (Refer to Figure D-7. for components location.)

CAUTION

The Power Supply Module contains components subject to damage by electrostatic discharge. Use approved grounding procedures before touching, removing, or inserting CCA.

CAUTION

Deenergize all external power supplies and other test equipment when disassembling or reassembling the UUT.

NOTE

In all troubleshooting procedures, when additional disassembly or reassembly is required, refer to the appropriate disassembly (D.6.5) or reassembly (D.6.10) procedure.

NOTE

After completion of troubleshooting and repair, perform the complete test procedure from the start.

D.6.12.1 +5V Output Failure. Failure in Test Procedure para. D.6.11.3.1

a. Check other output voltages. If exists, check transformer T9.

b. Proceed with troubleshooting IAW para. D.6.12.13.

D.6.12.2 +15V Output Failure. Failure in Test Procedure para. D.6.11.3.2

a. Check main transformer T4 output pins 10 and 11 and diode CR24.

b. Check the voltage regulator circuit U11 and its related components.

c. Check output filter circuit T8 and related components.

D.6.12.3 -15V Output Failure. Failure in Test Procedure para. D.6.11.3.3

a. Check main transformers T4 output pins 2 and 3 and diode CR29.

b. Check the voltage regulator circuit U12 and its related components.

c. Check output filter circuit T8 and related components.

D.6.12.4 Transceiver Output Failure

Failure in test procedure para. D.6.11.3.4.

D.6.12.4.1 Control Circuit Failure

a. Check that output filter L11, T10 and related components are not shorted or disconnected.

b. Press and hold ANT S.D. switch. Check for +27±1Vdc on L7, pins 1, 2, 3. If failed, continue troubleshooting IAW para. D.6.12.4.2..

c. Check on U8, pin 7 for minimum 14Vdc. If failed, continue troubleshooting IAW para. D.6.12.12.

d. Check on U8, pin 6 for 270±30KHz oscillations. If failed, check R87, C89, Q11, CR61. Check R105, C120, CR9, CR10, R104.

e. Check R99, R92. If not failed, replace U2.

f. Check L7 pins are not shorted or disconnected.

g. Check on Q12/gate for 270±30KHz oscillations. If failed, check CR59, R91.

h. Check on Q12/drain for 270±30KHz oscillations. If failed, replace Q12.

i. Check CR13.

D.6.12.4.2 Shutdown and Input Protection Circuit Failure

a. Press and hold ANT S.D. switch. Check if Q13 is cutoff. If failed, check that Q13 is not shorted.

b. If Q13 conducts, check U9, pin 3 for oscillations. If no oscillations, replace Q13. If there are oscillations, check U9, pin 4 for low level voltage. If low level, replace U9. If high level, check that Q5 and Q10 are not shorted or are conducting. If failed, replace Q5 or Q10. Check diode CR6.

c. Check that Q9 is not shorted. If failed, replace Q9. Before replacing Q9, inject high level voltage into U9, pin 4, check U9, pin 3 for oscillations, and check Q13/collector for the same frequency oscillations.

d. Check filter L6 and related components.

D.6.12.5 High and Low Operating Range Failures

Failure in test procedure para. D.6.11.3.5. and D.6.11.3.6.

D.6.12.5.1 Failure in Test Procedure Para. D.6.11.3.5.c., e. and D.6.11.3.6.c.

a. Check Q16/gate for 36±1Vdc. If failed, check diodes CR4, CR5, CR38.

b. Check that Q16 is not shorted. If failed, replace Q16.

c. Continue to check IAW No Operation Failures procedures para. D.6.12.12..

D.6.12.5.2 Failure in Test Procedure Para. D.6.11.3.5.f.

a. Press and hold ANT S.D. switch. Check Q9/gate for 36±1Vdc. If failed, check diodes CR4, CR5, CR39, CR40.

b. Check if Q13 is cutoff and not shorted. If shorted, replace Q13.

c. If Q13 conducts, check U9, pin 3 for oscillations. If no oscillations, replace Q13. If there are oscillations, check U9, pin 4 for low level voltage. If low level, replace U9. If high level, check Q5 and Q10 are not shorted or are conducting. If failed, replace Q5 or Q10. Check diode CR6.

d. Check that Q9 is not shorted. If failed, replace Q9. Before replacing Q9, inject high level voltage into U9, pin 4, and check U9, pin 3 for oscillations, and Q13/collector for same frequency oscillations.

e. Continue to check IAW para. D.6.12.13.

D.6.12.6 Shutdown and Short Circuit Failure

Failure in test procedure para. D.6.11.3.7.

D.6.12.6.1 Failure in para. D.6.11.3.7.d.

a. Press TOT S.D. switch. Check if less than 2V on U1, pin 6. If failed, check R65 and CR32

b. Check if above 10V on U1, pin 7. If failed, replace U1.

c. Check if CR33 conducts.

d. If good, replace U2.

D.6.12.6.2 Failure in para. D.6.11.3.7.e.

a. Press +5V SHORTING switch, and verify voltage on R20 increases. If failed, replace T5.

b. Check diodes CR20, CR47, CR22.

c. If good, replace U2.

D.6.12.6.3 Failure in para. D.6.11.3.7.f.

a. Check that fuse F1 is not burned.

b. Check that L8 is not disconnected.

c. Check output filter T10 and related components.

D.6.12.7 Reverse Polarity Failure

Failure in test procedure para. D.6.11.3.8.

a. Check CR1 and CR2. Replace if failed.

D.6.12.7.1 Heater Circuit Failure

Failure in test procedure para. D.6.11.3.9.

D.6.12.7.2 High Level Heater Failure

Failure in test procedure para. D.6.11.3.9.f.-h.

a. Turn PR2 on test fixture in both directions, and check if the comparator U10, pin 7 changes state. If failure, check reference resistors R114, R115, R113 and U10.

b. Check transistor Q19/collector for changing state according to U10, pin 7 output.

c. Check transistor Q15/drain for changing state according to Q19/collector.

D.6.12.7.3 Low Level Heater Failure

Failure in test procedure para. D.6.11.3.9.l.-n.

a. Turn PR2 on test fixture in both directions, and check if the comparator U10, pin 1 changes state. If failure, check reference resistors R58, R100, R59 and U10.

b. Check transistor Q6/drain for changing state according to U10, pin 1 output.

D.6.12.8 EL Circuit Failure

Failure in test procedure para. D.6.11.3.10.

a. Check output of oscillator U3, pin 7 for 400Hz. If no oscillations, or incorrect frequency, check C20, R8, R9, R10 and U3.

b. b. While turning PR1, check output of integrator U3, pin 1 for changing amplitude. Check L9, L10, R96, C13 and U3.

c. Check transformer T3 output pins 6 and 5, and diode CR14.

d. Check transformer T3 output pins 7 and 4, and diode CR15.

e. Check that transistors Q4 and Q14 change state in accordance with oscillations.

f. Check diodes CR56, CR57, CR58.

g. Check output filter circuit T7 and related components.

D.6.12.9 Keyboard Illumination Circuit Failure

Failure in Test Procedure para. D.6.11.3.11.

a. Check output of oscillator U7, pin 9. If there are no oscillations, or incorrect frequency, check C114, R62, R63, and U7.

b. Check output of one-shot U7, pin 5. The duty cycle at this output should vary between 60% to 90% minimum. If failed, check C81, R57 and U7.

c. Check transistor Q7/drain for changing state according to U7, pin 5 output.

D.6.12.10 Contrast Circuit Failure

Failure in Test Procedure para. D.6.11.3.12.

a. If failed at para. D.6.11.3.11.b., check and replace resistor R108.

b. If failed at para. D.6.11.3.11.c., check and replace resistor R106 and zener diode CR49.

c. If failed at para. D.6.11.3.11.d., check and replace resistor R107.

D.6.12.11 Starting Range Failure

Failure in Test Procedure para. D.6.11.3.13.

a. Measure voltage on CR1/cathode. Measure voltage on U1, pin 6. The voltage on U1/6 should be about 0.34 of the voltage measured at CR1/cathode. If failed, check R67, R69.

b. Set input voltage to 14Vdc. Measure voltage on CR44/cathode. Measure voltage on U1, pin 5. The voltage on U1/5 should be about 0.53 of the voltage measured at CR44/cathode. If failed, check R28, R29, R55.

c. Set input voltage to 17Vdc. Measure voltage on CR44/cathode. Measure voltage on U1, pin 5. The voltage on U1/5 should be about 0.44 of the voltage measured at CR44/cathode. If failed, check R28, R29, R55.

D.6.12.12 No Operation Failures

a. Check that voltage on CR1/cathode is +27±1Vdc. If failed, check input filter circuit CR1, T1, T2, and related components. If very high current consumption, check CR37.

b. Check on U2, pin 7 for minimum 14Vdc. If failed, check startup circuit IAW para. D.6.12.13.

c. Check on U2, pin 6 for 270±30KHz oscillations. If failed, check for less then 0.5V on U1, pin 7. Check diode CR33. Check that optocoupler OC2 is not shorted. If not failed, replace U2.

d. Check on Q16/source for 28±1Vdc. If failed, check 36±1Vdc on Q16/gate. Check CR3, CR4, CR5. If not failed, replace Q16.

e. Check for 28±1Vdc on T5, pin 2. If failed, check L1 and T5.

f. Check that T3, T4, pins 1 and 12 are not shorted or disconnected.

g. Check Q17/gate for 270±30KHz oscillations. If failed, check CR46, R19.

h. Check Q17/drain for 270±30KHz oscillations. If failed, replace Q17.

i. Check T4, pins 5 and 4 for 270±30KHz, 23±1V upper side amplitude. Check CR23.

j. Check T5, pins 3 and 4 for 270±30KHz, with amplitude below 3V. Disregard spikes. Check diodes CR20, CR47, CR22.

k. Verify there is 2.5Vdc on CR52/cathode. Check U6, pin1 for 4±0.5Vdc. Disregard spikes. Check that optocoupler OC2 conducts. Replace, if failed.

D.6.12.13 STARTUP CIRCUIT Failure

a. Check that CR45 is not shorted.

b. Check diodes CR26, CR27, CR44.

c. Check U1, pin 1 for more then 9Vdc. If failed, replace U1.

d. Check Q2/gate for 16±1Vdc. If failed check R22, CR43.

e. Check Q2 conducts. If failed, replace Q2.

f. Check CR16.

D.6.13 Final Testing

D.6.13.1 Final Testing Procedures

The final testing is performed on a reassembled UUT. The test setup provided in Figure D-8. shows the equipment used and cable hookup for the first procedural step.

D.6.13.2 Test Data Sheets

The test data sheets in Table D-6., are to be reproduced locally, as required, for recording the test results. The test data sheets must be completed each time a test section is performed. The completed test data sheets shall be retained.

D.6.13.3 Preparation for Test

a. Reassemble the UUT IAW para. D.6.10.3 and D.6.10.4.
b. Energize and adjust DMM to measure DC volts.
c. Energize and adjust current meter to measure high DC current (10 Amp).
d. Set switch S1 on the test fixture to PS position.
e. Set switch S2 on the test fixture to 1 position.
f. Set KBRDIM switch on the test fixture to off position.
g. Set HEATER switch on the test fixture to off position.
h. Set potentiometer PR1 on the test fixture maximum CCW.
i. Energize and adjust DC power supply to measure +28±1Vdc. Deenergize DC power supply.
j. Before connecting the UUT to the test setup, verify that the text equipment is deenergized.
k. Connect the UUT to the test setup IAW Figure D-8.

D.6.13.4 Final Testing

Perform the final testing IAW para. D.6.11.3.

SECTION VII.
MUZZLE VELOCITY PROCESSOR CIRCUIT CARD ASSEMBLY, P/N AY6706703-0

SECTION CONTENTS

		Page
D.7	MUZZLE VELOCITY PROCESSOR (MVP) CIRCUIT CARD ASSEMBLY (CCA), P/N AY6706703-0.	D-50
D.7.1	GENERAL.	D-50
D.7.2	TEST EQUIPMENT AND SPECIAL TOOLS REQUIRED.	D-50
D.7.3	MATERIALS REQUIRED.	D-50
D.7.4	GENERAL REPAIR REQUIREMENTS.	D-51
D.7.5	MVP CCA DISASSEMBLY.	D-52
D.7.6	CLEANING.	D-55
D.7.7	VISUAL INSPECTION.	D-55
D.7.8	REPAIR.	D-55
D.7.9	PAINTING.	D-55
D.7.10	MVP CCA REASSEMBLY.	D-55
D.7.11	TESTING.	D-56
D.7.12	TROUBLESHOOTING.	D-70
D.7.13	PREPROGRAMMED COMPONENTS PROGRAMMING PROCEDURE	D-79
D.7.14	FINAL TESTING.	D-80

D.7 MUZZLE VELOCITY PROCESSOR (MVP) CIRCUIT CARD ASSEMBLY (CCA), P/N AY6706703-0

D.7.1 General

This section provides repair procedures and maintenance information for the Muzzle Velocity Processor (MVP) circuit card assembly (CCA), P/N AY6706703-0. Source, maintenance, and recoverability code is PAFHD.

D.7.2 Test Equipment and Special Tools Required

Test equipment and special tools requirements are listed in Table D-7. Unless otherwise specified, the test equipment and special tools listed below will be used for testing the MVP CCA. Each commercially available item of test equipment can be replaced by equipment equivalent to that listed.

Table D-7. Test Equipment and Special Tools Required

Nomenclature	Part/Spec. No.	Figure
Coaxial Cables, BNC, Male-To-Male, 50 Ω (4)	Local Manufacture	N/A
Digital Counter	Fluke, Model 7250A	C-27, 42
Digital Multimeter	Hewlett Packard, Model 3478A	C-27, 43
Electronic Equipment Tool Kit	PPL863	C-27, 11
Function Generator	Wavetek, Model 178	C-27, 41
Oscilloscope	Hewlett Packard, Model 1070B	C-27, 44
Power Supply, DC (0-40 V, 5 A)	Lambda, LLS-9040	C-27, 24
Test Set, Conventional MVP	RSL, P/N AY6708006-0	C-27, 55
Personal Computer	IBM 386 PC or compatible	C-27, 46
M94 Data Base Reprogram Software Diskette	RSL, P/N RD6708181-0	C-27, 53
ESD Work Station Kit	M87893-02	C-27, 13

D.7.3 Materials Required

Repair materials and other consumable items required are listed in Table D-8.

Table D-8. Materials Required

Nomenclature	Part/Spec. No.	Appendix F Item No.
Adhesive	MIL-A-46146, Type III	19
Insulation Compound	MIL-I-46058 TYPE 1B31	9
Solder	SN63WRMAP3	23
Lubricant Tape	Tape 75 (3M)	38
Sealing Compound	83-31	16
Primer	747-55	17
Insulation Tubing	M22129-22-N	25
Bus Wire	QQ-W-343/S-22-S1T	29

Nomenclature	Part/Spec. No.	Appendix F Item No.
Label	DAT-59-652-1 (Brady)	39
Label	DAT-50-652-1 (Brady)	40
Antistatic Bag	3271576	33

D.7.4 General Repair Requirements

Refer to Figure D-11. The following general requirements apply to the repair of MVP CCA.

CAUTION

The MVP CCA contains components subject to damage by electrostatic discharge (ESD). Use approved grounding procedures before touching, removing, or inserting CCA.

a. Ensure that components are properly oriented before installing.

b. Square mounting pad designates:

   1. Pin 1 of integrated circuit
   2. Emitter of transistor
   3. Cathode of diode
   4. Positive lead of capacitor

c. Do not bend leads of components U22, U32 and U34.

d. Use only SN63WRMAP3 tin/lead solder or approved equivalent.

e. Bond components C38, C39, C42, and C44 to PWB with MIL-A-46146, Type III, adhesive before applying insulation compound.

CAUTION

Insulation compound must not be applied to any connector pins. Inadvertent application of compound to connector pins may require replacement of connector.

f. Apply uniform coating of MIL-I-146058 TYPE 1B31 insulation compound 0.003±0.002 in. thick, where compound has been removed during CCA repairs.

g. Do not apply insulation compound to mounting edge (0.4 inch) on either side of printed wiring board (PWB) or to socket of U34.

h. Apply primer MIL-S-22473 grade T and sealing compound MIL-S-22473 grade CV to threads.

D.7.5 MVP CCA Disassembly

D.7.5.1 Removal

If necessary, remove MVP CCA IAW para. 3.2.5 in Chapter 3 of this manual.

D.7.5.2 Digital Signal Processor (DSP) Disassembly (Refer to Figure D-11)

a. Remove four screws (6), four lock washers (7), eight flat washers (8) and four nuts (9).
b. Remove housing (4) and thermal sheet (3).
c. Carefully extract DSP (2) from the socket (5).
d. Place DSP onto antistatic foam, and place it in an antistatic bag.

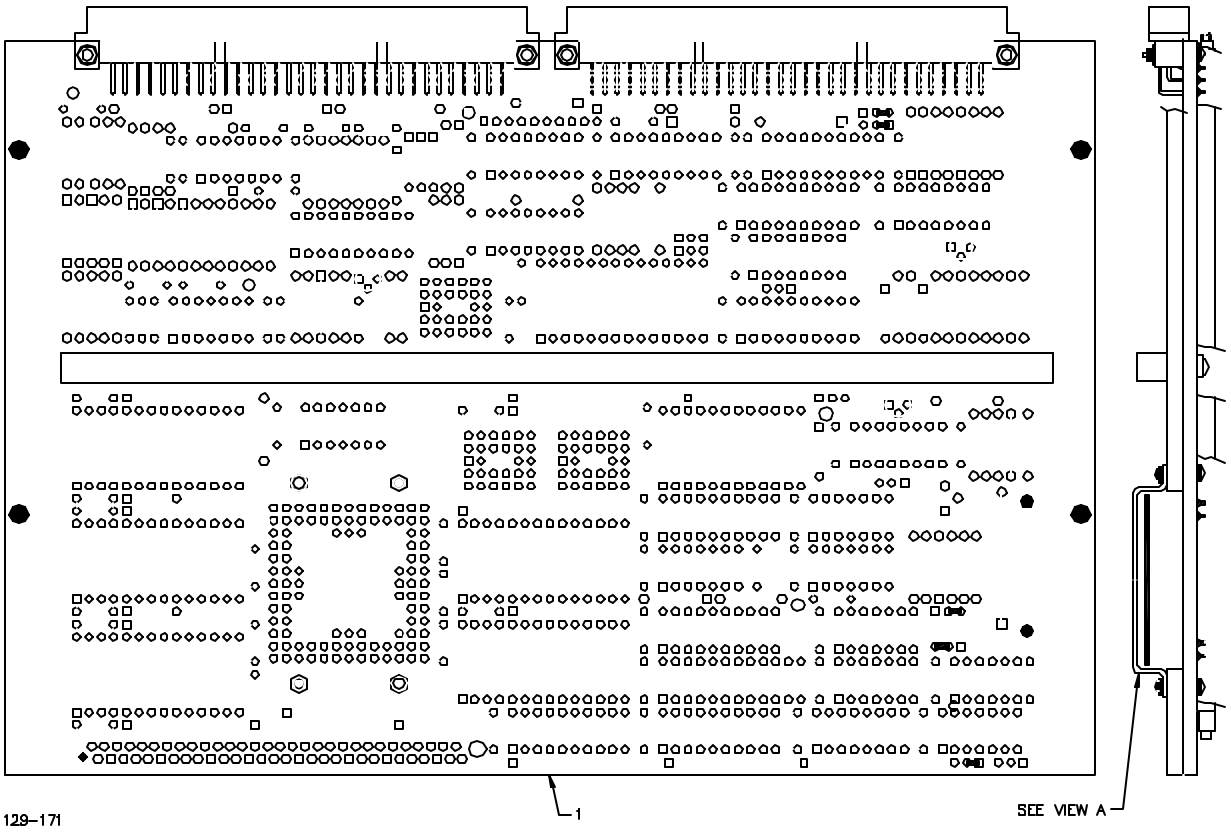

Figure D-11. MVP CCA (Sheet 1 of 2)

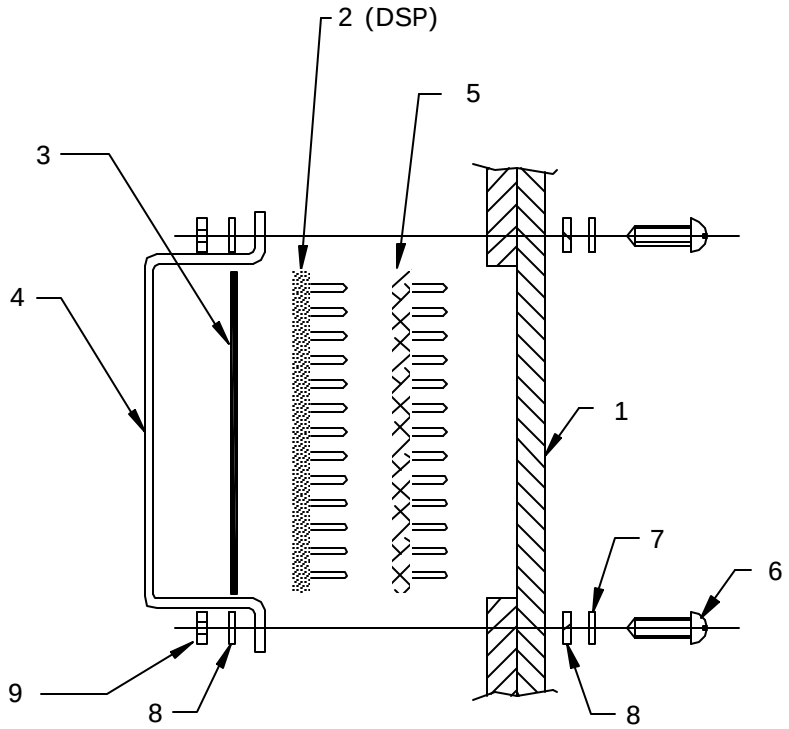

Figure D-11. MVP CCA (Sheet 2 of 2)

D.7.6 Cleaning

Refer to para. 3.1.4 in Chapter 3 of this manual.

D.7.7 Visual Inspection

a. Inspect connectors for damaged pins and foreign matter.

b. Inspect all components for secure attachment.

c. Inspect all parts for damage, wear, and deterioration.

d. Inspect all parts for nicks, scoring, dents, scratches, and broken runs.

e. Inspect all electronic components for indication of overheating, cracked bodies, loose terminals, broken leads, cold solder joints, and other indications of damage or deterioration.

D.7.8 Repair

Repair defective parts that were noticed during preshop analysis (para. D.3) and visual inspection (para. D.7.7).

D.7.9 Painting

No painting required on MVP CCA.

D.7.10 MVP CCA Reassembly

D.7.10.1 DSP Reassembly (Refer to Figure D-11)

a. Carefully insert DSP (2) to the socket (5), paying attention to the correct orientation of the component.

b. Install housing (4) and thermal sheet (3). Use as many thermal sheets (3) as required to eliminate any space between the DSP (2) and the housing (4).

c. Install and fasten four screws (6), four lock washers (7), eight flat washers (8) and four nuts (9).

D.7.10.2 Replacement of Preprogrammed Components (Refer to Figure C-6)

For replacement of faulty programmed EPROM's U24, U25, U26, and PAL U13, refer to para.D.7.13 for programming procedures.

D.7.10.3 Installation

Install MVP CCA IAW para. 3.2.6 in Chapter 3 of this manual.

D.7.11 Testing

CAUTION

The MVP CCA contains components subject to damage by electrostatic discharge. Use approved grounding procedures before touching, removing, or inserting CCA.

NOTE

Hereafter, the MVP CCA will be referred to as the Unit Under Test (UUT).

D.7.11.1 General

D.7.11.1.1 MVP CCA Test Procedures

The test setup provided in Figure D-12, shows the equipment used and cable hookup for the test procedure. Figures D-13. and D-14. are detailed illustrations of the special testers.

D.7.11.1.2 Test Data Sheets

Test data sheets in Table D-9. are to be reproduced locally, as required, for recording the test results. The test data sheets must be completed each time a test section is performed. The completed test data sheets shall be retained and used as a troubleshooting aid.

D.7.11.2 Preparation for Test

The test setup is shown in Figure D-12. Figures D-13. and D-14. are detailed illustrations of the special testers.

a. Remove the UUT from higher assembly IAW para. 3.2.5 in Chapter 3 of this manual.
b. Energize and adjust digital multimeter (DMM) to measure DC volts.
c. Energize power supply and adjust to 25.5±0.5Vdc. Deenergize power supply.
d. Set switch S3 on the test fixture to ANT.CABLE position.
e. Before connecting the UUT to the test setup, verify that the text fixture is deenergized.
f. Connect the UUT to the test setup IAW Figure D-12.
g. Energize power supply and all test equipment.

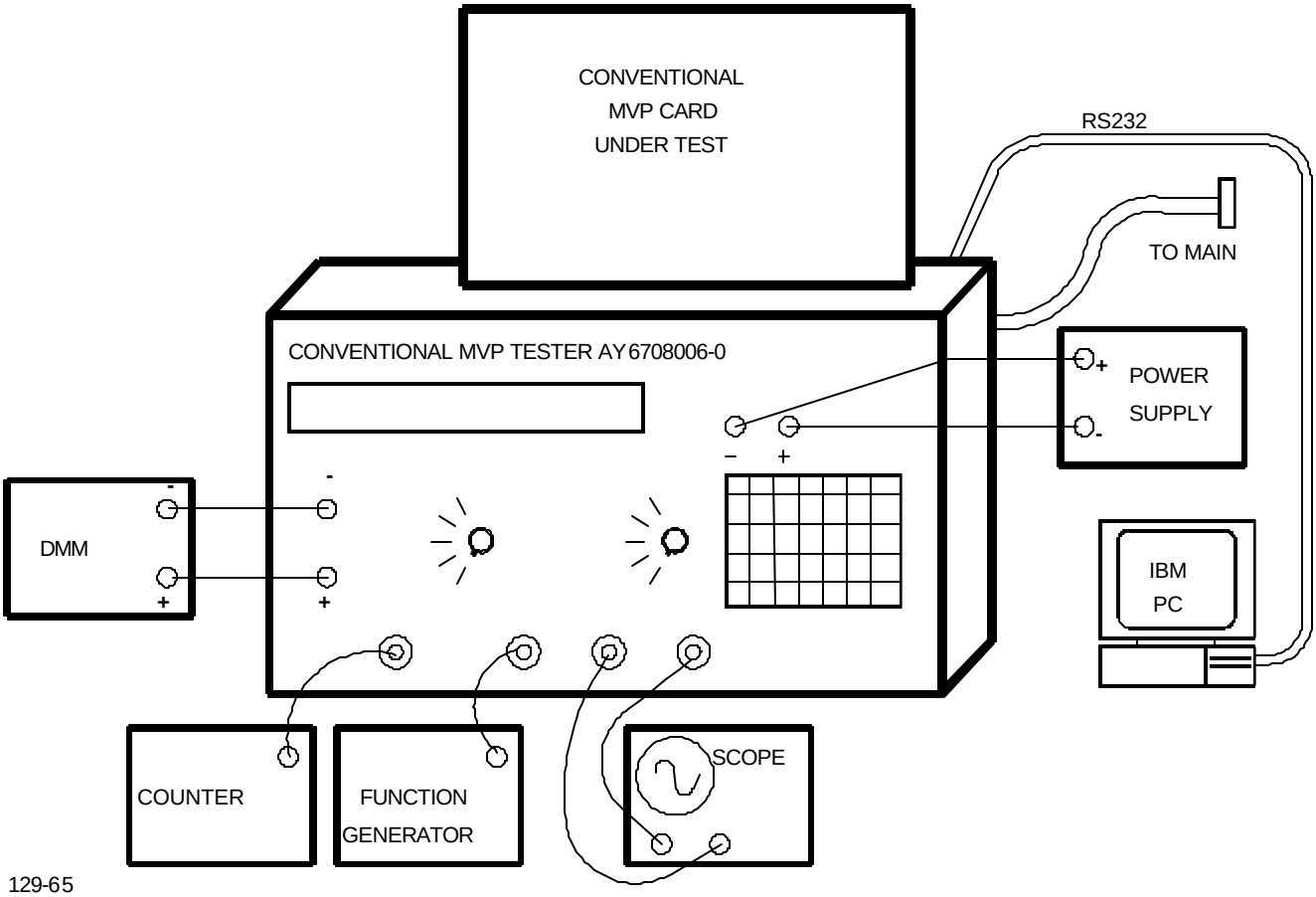

Figure D-12. MVP CCA Test Set-up

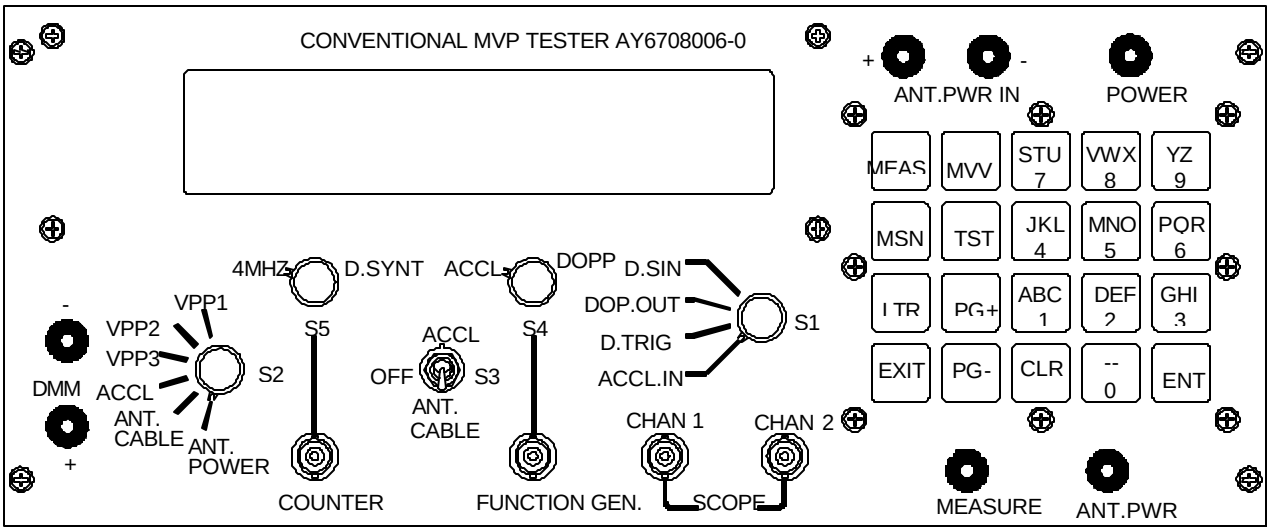

P8005

Figure D-13. MVP CCA Test Fixture

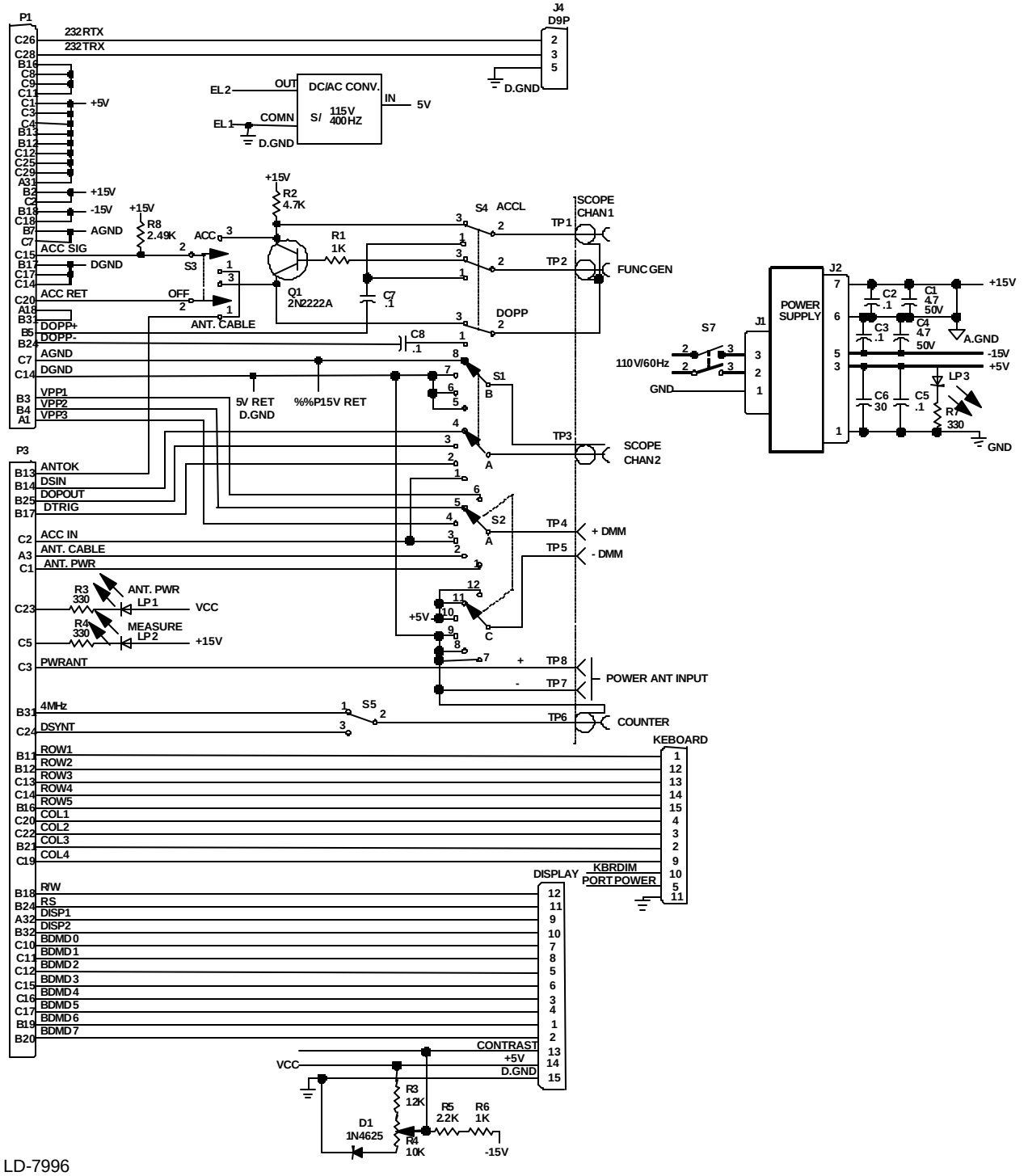

LD-7996

Figure D-14. MVP CCA Test Fixture Schematic

D.7.11.3 Functional Test

D.7.11.3.1 Hardware Tests.

Refer to para. D.7.12.1. for troubleshooting procedures.

a. Set switch S5 on MVP CCA Tester to 4MHz position.
b. Verify the frequency measured by the counter is 4 MHz±100Hz.
c. Set switch S5 on MVP CCA Tester to D.SYNT position and verify the frequency measured by the counter is 28±2KHz.
d. Set switch S2 on MVP CCA Tester to Vp-p1 position and verify the voltage measured by the DMM is -0.3±0.3Vdc.
e. Set switch S2 on MVP CCA Tester to Vp-p2 position and verify the voltage measured by the DMM is -0.3±0.3Vdc.
f. Set switch S2 on MVP CCA Tester to Vp-p3 position and verify the voltage measured by the DMM is -0.3±0.3Vdc.

D.7.11.3.2 Doppler Input Circuit Tests

Refer to para. D.7.12.2. for troubleshooting procedures.

a. Set switch S1 on MVP CCA Tester to D.SIN position.
b. Set the frequency of the function generator to a frequency of 10±0.5KHz amplitude 400±50mVp-p.
c. Verify the amplitude of the sine wave on channel 2 of the oscilloscope is 400±50mVp-p.
d. Set switch S1 on MVP CCA Tester to DOPP.OUT position.
e. Verify the signal on channel 2 of the oscilloscope is a square wave:
    1. High level 5±0.5Vdc
    2. Low level -1±0.5Vdc
    3. Frequency 10±0.5KHz
f. Set switch S1 on MVP CCA Tester to D.TRIG position.
g. Verify the signal on channel 2 of the oscilloscope is -1±0.5Vdc.
h. Set the function generator to a sine wave:
    1. Amplitude 8±0.5Vp-p
    2. Frequency 40±0.5KHz
i. Verify the signal on channel 2 of the oscilloscope pulses at:
    1. High level 4.5±0.5Vdc
    2. Low level -1±0.5Vdc
j. Turn off the function generator.

D.7.11.3.3 Acceleration Switch and Cable Connection Inputs Tests

Refer to para. D.7.12.3. for troubleshooting procedures.

a. Set switch S1 on MVP CCA Tester to ACCL.IN position.
b. Set switch S2 on MVP CCA Tester to ACCL position.
c. Set switch S4 on MVP CCA Tester to ACCL position.
d. Verify the voltage measured by the DMM is -0.5±0.25Vdc.
e. Set switch S2 on MVP CCA Tester to ANT.CABLE position.
f. Verify the voltage measured by the DMM is 0.3±0.3Vdc.
g. Set switch S2 on MVP CCA Tester to ANT POWER position.
h. Verify the voltage measured by the DMM is -0.5±0.25Vdc.
i. Adjust power supply to +21.7±0.2Vdc. Verify the voltage measured by the DMM is 5±0.5Vdc.
j. Adjust power supply to +25.5±0.5Vdc.
k. Set switch S2 on MVP CCA Tester to ANT.CABLE position.
l. Set switch S3 on MVP CCA Tester to OFF position.
m. Verify the voltage measured by the DMM is 5±0.5Vdc.
n. Set switch S2 on MVP CCA Tester to ACCL position.
o. Verify the voltage measured by the DMM is 5±0.5Vdc.
p. Set switch S3 on MVP CCA Tester to ACCL position.
q. Turn on and set the function generator to a square wave 5±0.3Vp-p amplitude +2.6±0.2Vdc offset and 1±0.1Khz frequency.
r. Measure delay time T = 77±17 msec as shown in Figure D-15.

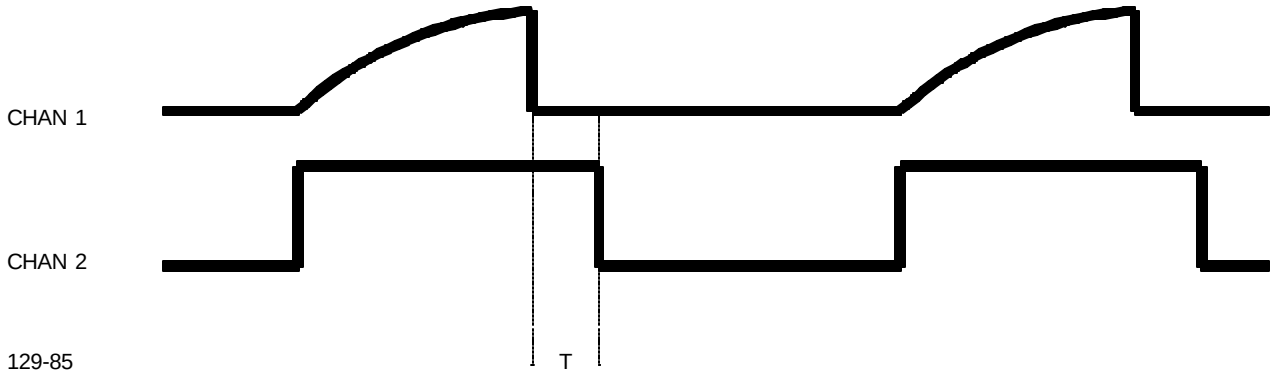

Figure D-15. Signal Shape on Scope

D.7.11.3.4 Startup Test

Refer to para. D.7.12.6. for troubleshooting procedures.

a. Energize power supply and all test equipment.

NOTE

Note that the MEASURE LED lights for about 1 second.

b. The BIT (Built In Test) will be performed automatically.

c. If using a new CCA, verify Control Processor and Display Unit (CPDU) Status screen displays:

WARNING

DO NOT press any key.

```
** CPDU Status **
Failed
                                        CPDU (02)
Press any key to continue...
```

d. If using a used CCA, verify Mission Data Gun screen displays:

```
  ** Mission Data **                    Gun Screen
Howitz Type: WWWWWW Howitz No.:     HHHH
Tube No.: TTTTT              MM/DD/YY:mm/dd/yy
1-Edit          Pg+: Pjctl              Pg-: Prplt
```

D.7.11.3.5 EEPROM Test

Refer to para. D.7.12.4. for troubleshooting procedures.

a. On the PC enter the command: MVSE2.EXE PF9256.BIN 1.

b. Press ENTER on PC keyboard.

c. Verify PC screen displays:

RSL Electronics Ltd. M-94 EEPROM Check.

Version 1.0.

***** Warning! *****

ALL EEPROM Data Will Be Destroyed!

Continue (Y/N)?

d. Press Y to continue.

e. Verify that the progress indicator is advancing.

f. When the test is completed verify PC screen displays:

***** TEST Report *****

U22 Pass

U32 Pass

***** Test Passed *****

NOTE

In case of failure, the test report indicates which EEPROM failed.

g. Press MSN key on the test equipment.

h. Verify the Mission Data Gun screen displays the test equipment as follows:

**** Mission Data ** Gun Screen**

Howitz Type: WWWWWW Howitz No.: HHHH

Tube No.: TTTTT MM/DD/YY:mm/dd/yy

1-Edit Pg+: Pjctl Pg-: Prplt

D.7.11.3.6 CPDU & System Tests

Refer to para. D.7.12.5. for troubleshooting procedures.

a. Turn switch S3 on MVP CCA Tester to OFF position.

b. Set switch S3 on MVP CCA Tester to ACCL position.

c. Press the TST key - Test screen will be displayed.

```
**TEST**
1 CPDU TEST
2 SYSTEM TEST
```

d. Set the power supply to +21.7±0.2Vdc.

e. Press 1. Verify CPDU TEST is performed as follows:

```
** CPDU Status **
 Testing, Wait . . .
```

f. Verify the message displayed on the screen is as follows:

```
** CPDU Status **
     FAILED
ANT PWR ANT CABLE ACCEL
Press any key to continue
```

g. Press the ENT key. The following CPDU TEST screen will appear:

```
    ** CPDU Test ** ROM/EEROM Ver. X.X/Y.Y
1 - Display
2 - Keyboard
3 - Automatic Reset
```

NOTE

X.X - Current software version Y.Y - Current data base version.

h. Press 1. The following DISPLAY TEST screen will appear:

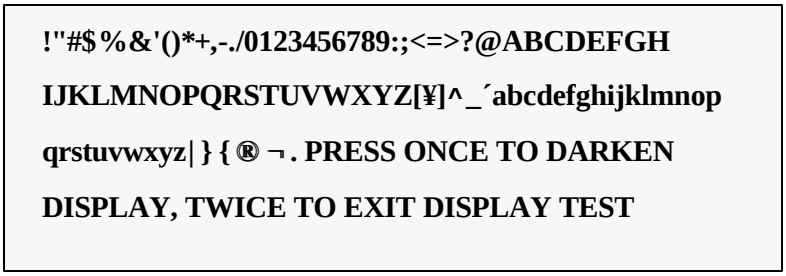

i. Ensure the characters displayed by the card under test exactly match the screen shown above.

j. Press the ENT key. Verify the display goes dark and verify there are no bad fields on the display.

k. Press the ENT key. Return to the CPDU Test screen.

l. Press 2. The Keyboard Test screen will be displayed:

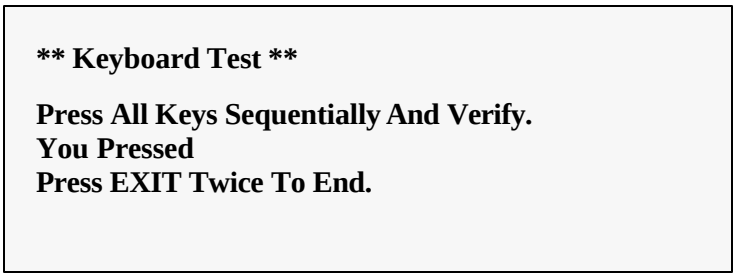

m. Press each key on the keyboard twice, except the EXIT key. Verify after pressing each key that the nomenclature appears after the words “You Pressed”.

n. Press the EXIT key twice and return to the CPDU Test screen.

o. Set switch S3 on the MVP CCA Tester to ANT.CABLE position.

p. Change the power supply voltage to +25.5±0.5Vdc.

q. Press 3. Verify that the Automatic Reset test screen is displayed.

r. Verify the following:

1. The display goes blank after two seconds.
2. The system tests itself.
3. The Mission Data screen is displayed as follows:

```
** Mission Data **                    Gun Screen
Howitz Type: WWWWWW Howitz No.:    HHHH
Tube No.: TTTTT          MM/DD/YY:mm/dd/yy
1-Edit                Pg+: Pjctl    Pg-: Prplt
```

s. Press the TST button. The following Test screen will be displayed:

```
** Test **
1 - CPDU Test
2 - System Test
```

t. Press 2. Verify the System Test screen is displayed:

```
** System Test **
Activate Doppler Simulator In Front
Of Antenna. Press ENT To Measure And
Verify MV (712 " 50):          1-ABORT
```

u. Set switch S4 on the MVP CCA Tester to DOPP position.

v. Turn on the function generator and set the functions to a sine wave at 8±0.5Vp-p amplitude and 50±0.01KHz frequency output.

w. Press the ENT key on the test equipment.

x. Verify MEASURE and ANT. PWR indicators on test equipment are on for about 1 second.

y. Verify the reading of the MV on the display is 711.4±0.6m/sec.

D.7.11.3.7 Measure Test

a. Press the MSN key. The Gun Screen will be displayed.

**** Mission Data ****	**Gun Screen**
Howitz Type: WWWWWW	**Howitz No.: HHHH**
Tube No.: TTTTT	**MM/DD/YY:mm/dd/yy**
1-Edit	**Pg+: Pjctl Pg-: Prplt**

NOTE

The asterix (*) in the data entry fields stands for data that is not critical for the test. When entering this data, just press ENT to use any present value as the default.

b. Enter edit mode and select the following data:

Howitzer Type	-	M109 (08)
Howitzer No.	-	*
Tube No.	-	*
MM/DD/YY	-	*
Pjctl Type	-	M449A1 (11)
WT	-	4 squares
Fuze	-	*
Prplt type	-	M3A1 (01)
Chg	-	1G (01)
Lot	-	*
Temp	-	*

c. Set function generator to sine wave, amplitude 400±50mVp-p and 14.5KHz±1Hz.

d. Press the MEAS key. The MV Measure screen will be displayed.

**** MV Measure ****	**Ready**
MV: XXXX.X	
Rounds Fired: XXX	
1-Stop 2-Temp:077.0 F 3-Wt:	**4 Squares**

e. Set switch S3 on the MVP CCA Tester to off and back to ANT.CABLE. Verify MEASURE and ANT. PWR indicators on test equipment are on for about 1 second. Verify measured MV is 206.3±0.3m/sec.

f. Press 1. Screen shall read NOT READY.

g. Press MSN key. The Mission Data Gun Screen will be displayed.

**** Mission Data ** Gun Screen**
Howitz Type: WWWWWW Howitz No.: HHHH
Tube No.: TTTTT MM/DD/YY:mm/dd/yy
1-Edit Pg+: Pjctl Pg-: Prplt

h. Enter edit mode and select the following data:

Howitz Type	-	M109A5
Howitz No.	-	*
Tube No.	-	*
MM/DD/YY	-	*
Pjctl Type	-	M687A1
WT	-	4 squares
Fuze	-	*
Prplt Type	-	M203
Chg	-	8R
Lot	-	*
Temp	-	*

i. Set function generator to sine wave 57.5KHz 1±Hz.

j. Press MEAS key. The MV Measure screen will be displayed.

**** MV Measure ** Ready**
MV: XXXX.X
Rounds Fired: XXX
1-Stop 2-Temp:077.0 F 3-Wt: 4 Squares

k. Set switch S3 on the MVP CCA Tester to off and back to ANT. CABLE. Verify Measure LED in test equipment is on for about 1 second. Verify measured MV is 818.1±0.6m/sec.

l. Turn off the function generator and the power supply, and remove the card under test from the test equipment.

END OF TEST

Table D-9. MVP CCA Test Data Sheet

SER NO. _____

Para.	Required Results	Actual Results	Remarks
D.7.11.3.1.b.	4MHz±100Hz		
D.7.11.3.1.c.	28±2KHz		
D.7.11.3.1.d.	-0.3±0.3Vdc		
D.7.11.3.1.e.	-0.3±0.3Vdc		
D.7.11.3.1.f.	-0.3±0.3Vdc		
D.7.11.3.2.c.	400±50mVp-p		
D.7.11.3.2.e.	High level 5±0.5Vdc Low level -1±0.5Vdc Frequency 10±0.5KHz		
D.7.11.3.2.g.	-1±0.5Vdc		
D.7.11.3.2.i.	High level 4.5±0.5Vdc Low level -1±0.5Vdc		
D.7.11.3.3.d.	-0.5±0.25Vdc		
D.7.11.3.3.f.	0.3±0.3Vdc		
D.7.11.3.3.h.	-0.5±0.25Vdc		
D.7.11.3.3.i.	5±0.5Vdc		
D.7.11.3.3.m.	5±0.5Vdc		
D.7.11.3.3.o.	5±0.5Vdc		
D.7.11.3.3.r.	77±17m/sec		
D.7.11.3.4.c.	CPDU Status Screen		
D.7.11.3.4.d.	Mission Data Gun Screen		
D.7.11.3.5.c.	PC Screen OK		
D.7.11.3.5.f.	Test Report: *** TEST PASSED ***		
D.7.11.3.5.h.	Mission Data Gun Screen		
D.7.11.3.6.f.	ANT.PWR, ANT CABLE ACCEL detected		
D.7.11.3.6.g.	ROM/EEPROM VER X.X/Y.Y		
D.7.11.3.6.h.	Verify Display Test		
D.7.11.3.6.i.	Display Test is OK		
D.7.11.3.6.j.	Display goes dark		
D.7.11.3.6.m.	All keys are OK		
D.7.11.3.6.r.1 thru 3	Automatic Reset is OK		
D.7.11.3.6.y.	711.4±0.6m/sec		
D.7.11.3.7.e.	Measured MV 206.3±0.3m/sec		
D.7.11.3.7.k.	Measured MV 818.1±0.6m/sec		

Date: _____
Tested by: _____
Inspected by: _____

D.7.12 Troubleshooting

This paragraph contains the troubleshooting procedures for UUT failures detected during testing. It is arranged in the sequence of test steps, and provides information on additional test steps required for malfunction isolation. Refer to Figure FO-3 for the schematic diagram. Refer to Figure D-16. for the DSP pin-out to schematic cross reference. Refer to Figure D-11. for components location.

CAUTION

The MVP CCA contains components subject to damage by electrostatic discharge. Use approved grounding procedures before touching, removing, or inserting CCA.

CAUTION

Deenergize all external power supplies and other test equipment when disassembling or reassembling the UUT.

NOTE

In all troubleshooting procedures, when additional disassembly or reassembly is required, refer to the appropriate disassembly (para. D.7.5) or reassembly (para. D.7.10) procedure.

NOTE

After completion of troubleshooting and repair, perform the complete test procedure from the start.

	1	2	3	4	5	6	7	8	9	10	11	12	13
N	25 DMA0	26 RESET	27 HALT	28 TRAP	29 PMS	30 GND	31 GND	32 VDD	33 BG	34 DMD23	35 PMD21	36 PMD20	37 PMD18
M	24 DMA2	69 GND	70 DMACK	71 PMDA	72 DMS	73 DMWR	74 DMRD	75 BR	76 PMRD	77 PMD22	78 PMD19	79 PMD17	38 PMD16
L	23 DMA3	68 DMA1				95 PMWR	96 CLKI	97 CLKO				80 PMD15	39 PMD14
K	22 DMA5	67 DMA4										81 PMD13	40 PMD12
J	21 GND	66 DMA6										82 PMD11	41 PMD10
H	20 VDD	65 DMA8	94 DMA7								98 PMD9	83 PMD8	42 GND
G	19 DMA9	64 DMA11	93 DMA10								99 PMD6	84 PMD7	43 VDD
F	18 DMA12	63 DMA13	92 DMD15								100 PMD3	85 PMD4	44 PMD5
E	17 DMD14	62 DMD13										86 PMD2	45 GND
D	16 DMD12	61 DMD11										87 PMD0	46 PMD1
C	15 DMD10	60 DMD9	INDEX PIN			91 IRQ0	90 IRQ2	89 PMA11				88 PMA2	47 PMA0
B	14 DMD8	59 DMD7	58 DMD6	57 DMD3	56 DMD1	55 IRQ1	54 IRQ3	53 PMA12	52 PMA9	51 PMA7	50 PMA6	49 PMA4	48 PMA1
A	13 GND	12 DMD5	11 DMD4	10 DMD2	9 DMD0	8 GND	7 VDD	6 PMA13	5 PMA10	4 PMA8	3 GND	2 PMA5	1 PMA3

129-189

Figure D-16. DSP U34 Pin-out to Schematic Cross Reference

D.7.12.1 Hardware Test Failures

Failure in test procedure para. D.7.11.3.1.

D.7.12.1.1 4MHz Failure

Failure in test procedure para. D.7.11.3.1.b.

a. Check for 32MHz on oscillator U27 output. If failed, replace U27.
b. Check for 8MHz on DSP U34, pin 97. If failed, replace U34.
c. Check for 4MHz on frequency divider U7, pin 14. If failed, replace U7.

D.7.12.1.2 28KHz Failure

Failure in test procedure para. D.7.11.3.1.c.

a. Check oscillator U41 for 28Hz on pin 1. If failed, check and replace C62, R63 or U41.
b. Check shaper U41, pin 14 and related components.

D.7.12.1.3 Vp-p1,2 or 3 Failure

Failure in test procedure para. D.7.11.3.1.d., e., f.

a. Check diodes CR32, CR33, CR34. If failed, replace.

D.7.12.2 Doppler Input Circuit Failures

Failure in test procedure para. D.7.11.3.2.

D.7.12.2.1 DSIN Failure

Failure in test procedure para. D.7.11.3.2.c.

a. Check the Doppler input circuit diodes CR9, CR10, CR11 and related components.
b. Check buffers and amplifier U36 for signal levels equal to input level.

D.7.12.2.2 DOP.OUT Failure

Failure in test procedure para. D.7.11.3.2.e.

a. Check shaper U29, pin 13 for logic levels, square wave signal is the same as input frequency.
b. Check related components.

D.7.12.2.3 DTRIG Failure

Failures in test procedure para. D.7.11.3.2.g., i.

a. Check U36, pin 14, and related components.
b. Check shaper U29, pin 2, and related components.

D.7.12.3 Acceleration Switch and Cable Connection Inputs Failure

Failure in test procedure para. D.7.11.3.3..

D.7.12.3.1 Acceleration Switch Input Failure

Failure in test procedure para. D.7.11.3.3.d., o., r.

a. Check U39 for 2.5Vdc on cathode.
b. Check acceleration shaper circuit U29, pin 14, CR29, C43, and related components.

D.7.12.3.2 Cable Connection Input Failure

Failure in test procedure para. D.7.11.3.3.f., m.

a. Check U39 for 2.5Vdc on cathode.

b. Check comparator U41, pin 2, and related components.

D.7.12.3.3 Antenna Output Sense Failure

Failure in test procedure para. D.7.11.3.3.h., i.

a. Check U39 for 2.5Vdc on cathode.

b. Check comparator U29, pin 1, and related components.

D.7.12.4 Serial Communication and EEPROM Failures

Failure in test procedure para. D.7.11.3.5..

D.7.12.4.1 No Serial Communication

The UUT does not respond to communication from PC.

NOTE

When the UUT does not respond, the program on PC is terminated with an error message. For troubleshooting the communication it is required to re-run the PC program several times to be able to verify the presence of pulses. A different approach is by using any commercially available communication software (PROCOM, etc.) and just pressing any key to verify the presence of pulses in the signal path. In this case, set the communication parameters as follows:
Band rate: 9600
Point: None
Stop Bit: 1
Word Length: 8 bits

NOTE

When required, turn off the UUT power, put oscilloscope probe on required test point and turn power on. Some pulses will appear briefly. Repeat if needed.

a. Using oscilloscope, ensure the transmission signal is present on U30, pin 9. If failed, replace U30.

b. Check TTL logic levels on U30/pin10. If failed check ±9V on U30/pin 3, U30/pin 7.

c. Check 153.8KHz on U4/pin 13. If failed, replace U4.

d. Check logic 0 on U11/pin 4. If failed check U33/pin 11 for pulses. If failed, replace U34.

e. Check U11/3 for logic 1. If passed replace U11. If failed, check logic 1 on P1/A18.

f. Cycle the UUT power. Verify logic 0 on U5/pin 14. If failed, check pulses on U5/pin 11. If failed, replace U13. If passed, replace U5.

g. Check U5/pin 14 and run PC software once. Verify pulses or logic 1. If failed, replace U5.

h. Repeat step g. while checking U11/pin 10. Logic levels should be opposite of those in step g. If failed, replace U11.

D.7.12.4.2 One or Both EEPROM's Failed

a. Repeat the test again. If the failure does not reappear, the malfunction is corrected.

b. If the malfunction exists, proceed with the test procedure up to para. D.7.11.3.6.f. and perform troubleshooting IAW para. D.7.12.5.2.2.

D.7.12.5 CPDU and System Failures

Failure in test procedure para. D.7.11.3.6.

D.7.12.5.1 Self Test Does Not Report Failures

Failure in test procedure para. D.7.11.3.6.f.

a. Repeat the test again. Re-run the test as many times as needed to perform the troubleshooting.

b. Check for logic level pulses on U13, pin 19. If failed, replace U13.

c. Check for logic level pulses on U14, pin 14. If failed, replace U14.

d. Check for logic level pulses on U19, pin 8. If failed, replace U19.

e. If no other failures, replace U2.

D.7.12.5.2 Self Test Reports CPDU Failures

Failure in test procedure para. D.7.11.3.6.f.

D.7.12.5.2.1 CPDU #01 Failure: RAM Failure

a. Repeat test again. If the failure does not reappear, the malfunction is corrected.

b. Check for 4.3±0.3Vdc on diode CR4, cathode. If failed, check and replace diode CR4 and capacitor C44.

c. Check for a logic 0 on U33, pin 5. If failed, replace U33.

d. Check for +4.5±0.5Vdc on the collector of transistor Q1. If failed, replace Q1.

e. Repeat test. Re-run the test as many times as needed to perform the troubleshooting.

f. Check for logic level pulses on U13, pin 19. If failed, replace U13.

g. Check for logic level pulses on U14, pin 14. If failed, replace U14.

h. Check for logic level pulses on U19, pin 11. If failed, replace U19.

i. Check for logic level pulses on U15, pins 2, 5 and 6. If failed, replace U15.

j. Check for logic level pulses on U13, pins 16 and 23. If failed, replace U13.

k. Check for logic level pulses on U21, pins 18, 5 and 3. If failed, replace U21.

l. If no other failures, replace U23 and U31.

D.7.12.5.2.2 CPDU #02 Failure: EEPROM Failure

a. Repeat test again. If the failure does not reappear, the malfunction is corrected.

b. Check for logic 0 on U33, pin 5. If failed, replace U33.

c. Check for +4.5±0.5Vdc on collector of transistor Q1. If failed, replace Q1.

d. Repeat test. Re-run the test as many times as needed to perform the troubleshooting.

e. Check for logic level pulses on U13, pin 19. If failed, replace U13.

f. Check for logic level pulses on U14, pin 14. If failed, replace U14.

g. Check for logic level pulses on U19, pin 11. If failed, replace U19.

h. Check for logic level pulses on U15, pins 2, 5 and 6. If failed, replace U15.

i. Check for logic level pulses on U13, pins 14, 15, 20 and 23. If failed, replace U13.

j. Check for logic level pulses on U21, pins 14, 12, 9 and 7. If failed, replace U21.

k. If no other failures, replace U22 and U32.

D.7.12.5.2.3 CPDU #04 Failure: PORTS Failure

NOTE

The signals appear for a short time during the test.

a. Repeat test again. If the failure does not reappear, the malfunction is corrected.

b. Re-run the test as many times as needed to perform the troubleshooting.

c. Check for logic level pulses on U13, pin 19. If failed, replace U13.

d. Check for logic level pulses on U14, pins 13 and 14. If failed, replace U14.

e. Check for logic level pulses on U19, pins 3 and 8. If failed, replace U19.

f. Check for logic level pulses on U17, pin 15. If failed, replace U17.

g. If no other failures, replace U2.

D.7.12.5.2.4 CPDU #08 Failure

NOTE

The signals appear for short time during the test.

a. Check for logic 1 on U11, pin 12. If failed, replace U11.

b. Check for logic level square wave of 28KHz on U18, pin 8. If failed, replace U18.

c. Check for logic level square wave of 28KHz on U28, pin 2. If failed, replace U28.

d. Check for logic 0 on U18, pin 6. If failed, replace U18.

e. Check for logic 1 on U28, pin 6. If failed, replace U28.

f. Check for logic level square wave of 28KHz on U18, pin 11. If failed, replace U18.

g. Check for logic level pulses on U17, pin 9. If failed, replace U17.

h. Check for logic level pulses on U4, pin 10 f=333KHz, and pin 17 f=41KHz. If failed, replace U4.

i. Check for logic level pulses f=28KHz on U3, pins 3, 4, 5, 6, 10, 11, 12 and 13. If failed, replace U3.

j. Check for logic level pulses on U13, pin 19. If failed, replace U13.

k. Check for logic level pulses on U14, pin 13. If failed, replace U14.

l. Check for logic level pulses on U19, pin 3. If failed, replace U19.

m. Check for logic 0 on U17, pin 6. If failed, replace U17.

n. Check for logic level pulses on U11, pin 2. If failed, replace U11.

o. Check for logic level pulses on U14, pin 15. If failed, replace U14.

p. Check for logic level pulses on U19, pin 6. If failed, replace U19.

q. If no other failures, replace U12.

r. Replace EPROM's U24, U25, U26.

D.7.12.5.3 Display Failures

No display at all, or Failure in Test Procedure para. D.7.11.3.6.i., j.

a. Check for logic 1 on U33, pin 15 (/RESET). If 0 (processor is in reset state), check for proper operation of the processor circuitry IAW para. D.7.12.6..

b. Check for logic 0 on U33, pin 16. If failed, replace U33.

c. Check for logic 1 on U33, pin 10. If failed, replace U33.

d. Check for 4.3±0.3Vdc on diode CR4, cathode. If failed, check and replace diode CR4 and capacitor C44.

e. Check for logic 0 on U33, pin 5. If failed, replace U33.

f. Check for +4.5±0.5Vdc on collector of transistor Q1. If failed, replace Q1.

g. Else, repeat test again. Re-run the test as many times as needed to perform the troubleshooting.

h. Check for logic level pulses on U13, pin 19. If failed, replace U13.

i. Check for logic level pulses on U14, pins 13, 9 and 7. If failed, replace U14.

j. Check for logic level pulses on U11, pins 8 and 6. If failed, replace U11.

k. Check for logic level pulses on U19, pin 3. If failed, replace U19.

l. Check for logic level pulses on U17, pins 16 and 19. If failed, replace U17.

m. Check for logic level pulses on U18, pin 3. If failed, replace U18.

n. If no other failures, replace U38.

D.7.12.5.4 Keyboard Failures

No keyboard operation at all, or failure in test procedure para. D.7.11.3.6.m.

D.7.12.5.4.1 No Keyboard Operation.

a. Check for logic 1 on U33, pin 10. If failed, replace U33.
b. Press and hold one of the keys on the keyboard for steps c and d.
c. Check for logic 1 on U37, pin 13. If failed, replace U37.
d. Check for logic 0 on U28, pin 12. If failed, replace U37.
e. Re-run the test as many times as needed to perform the troubleshooting.
f. Check for logic level pulses on U13, pin 19. If failed, replace U13.
g. Check for logic level pulses on U14, pin 10. If failed, replace U14.
h. Check capacitors C52 and C53. Replace if failed.
i. If no other failures, replace U37.
j. Temporary replace U34 with a new component.
k. If the failure does not reappear, the malfunction is corrected. U34 was the failed component.

D.7.12.5.4.2 One or Several Keys Do Not Work, or Incorrect Key is Displayed

Failure in Test Procedure para. D.7.11.3.6.m.

a. Check capacitors C52 and C53. Replace if failed.
b. If no other failures, replace U37.

D.7.12.5.4.3 Automatic Reset Failure

Failure in Test Procedure para. D.7.11.3.6.q., r.

a. Temporary replace U34 with a new component.
b. Re-run the test as many times as needed to perform the troubleshooting.
c. If the failure does not reappear, the malfunction is corrected. U34 was the failed component. If the failure reappears, reassemble the original U34 and proceed with steps below.
d. Check for no logic level pulses on U17, pin 12. If there are pulses, proceed with processor circuitry failure troubleshooting IAW para. D.7.12.6..
e. Check for logic 0 on U33, pin 15. If failed, replace U33.

D.7.12.5.4.4 System Test Failure

Failure in Test Procedure para. D.7.11.3.6.x., y.

D.7.12.5.4.4.1 Measure Indicator Failure

a. Repeat test again. Re-run the test as many times as needed to perform the troubleshooting. Deenergize function generator for troubleshooting.
b. Before pressing ENT on keyboard, check for logic 0 on U17, pin 2. If failed, replace U17.
c. Check that transistor Q3, emitter and collector are not shorted. If shorted, remove short, or replace Q3.
d. Press ENT on keyboard, check for logic 1 on U17, pin 2. If failed, replace U17.

e. Check for 0.7±0.2Vdc on transistor Q3, base. If failed, check diode CR31, resistors R114 andR115. Check that Q3, base is not shorted to ground.

f. Check transistor Q3 for saturation. If failed, replace Q3.

D.7.12.5.4.4.2 ANT.PWR Indicator Failure

a. Repeat test again. Re-run the test as many times as needed to perform the troubleshooting. Deenergize function generator for troubleshooting.

b. Before pressing ENT on keyboard, check for logic 0 on U17, pin 5. If failed, replace U17.

c. Check that transistor Q2, emitter and collector are not shorted. If shorted, remove short, or replace Q2.

d. Press ENT on keyboard and check for logic 1 on U17, pin 5. If failed, replace U17.

e. Check for 0.7±0.2Vdc on transistor Q2, base. If failed, check diode CR30, resistors R112 and R113. Check that Q2, base is not shorted to ground.

f. Check transistor Q2 for saturation. If failed, replace Q2.

D.7.12.5.4.4.3 Incorrect Result or No Measurement Failure

a. Repeat test again. Re-run the test as many times as needed to perform the troubleshooting.

b. Check for logic 1 on U17, pin 6. If failed, replace U17.

c. Check for logic 0 on U11, pin 12. If failed, replace U11.

d. Check for logic level square wave of 50KHz on U18, pin 6. If failed, replace U18.

e. Check for logic level square wave of 50KHz on U28, pin 6. If failed, replace U28.

f. Check for logic 0 on U18, pin 8. If failed, replace U18.

g. Check for logic 1 on U28, pin 2. If failed, replace U28.

h. Check for logic level square wave of 50KHz on U18, pin 11. If failed, replace U18.

i. If no other failures, replace U2.

j. Replace EPROM's U24, U25, U26.

D.7.12.6 Processor Circuitry No Operation Failures

a. Remove U34.

b. Check Program Memory Address (PMA0 through PMA13, PMDA, PMRD, PMS) bus for short to ground. Refer to Figure FO-3, sheets 2 and 4 for pin number designation. Refer to Figure D-16. for DSP pin-out to schematic cross reference. If a short is visually recognizable, remove it. Check the respective resistor networks Z5 and Z6. If no other failures, the short is caused by one of the EPROM's, U24, U25, U26. Replace the EPROM's, one by one and repeat the short test.

c. Check Program Memory Data (PMD0 through PMD23) bus for short to ground. Refer to Figure FO-3, sheets 2 and 4 for pin number designation. If a short is visually recognizable, remove it. Check the respective resistor networks Z1, Z2, and Z3. If no other failures, replace the component (U24, U25, or U26) that causes the short circuit.

d. Check Data Memory Address (DMA0 through DMA13, DMWR, DMRD, DMS, DMACK) bus for short to ground. Refer to Figure FO-3, sheets 4 and 5 for pin number designation. If a short is visually recognizable, remove it. Check the respective resistor networks Z9 and Z10.

If no other failures, the short is caused by one of the components on the bus, U13, U22, U23, U31, U32. Replace the components, one by one and repeat the short test.

e. Check Data Memory Data (DMD0 through DMD15) bus for short to ground. Refer to Figure FO-3, sheets 3, 4, 5, 6 and 7 for pin number designation. If a short is visually recognizable, remove it. Check the respective resistor networks Z7, Z8 and Z9. If no other failures, the short is caused by one of the components on the bus, U15, U2, U12, U17, U22, U23, U31, U32, U4, U5, U37, U38. Replace the components, one by one and repeat the short test.

f. Temporarily replace U34 with a new component.

g. Repeat test again.

h. If the failure does not reappear, the malfunction is corrected. U34 was the failed component. If the failure reappears, reassemble the original U34 and proceed with steps below. Re-run the test as many times as needed to perform the troubleshooting.

i. Check for logic 1 on U33, pins 10 and 16. If failed, replace U33.

j. Check for logic 0 on U33, pin 15. If failed, replace U33.

k. Check for 4.3±0.3Vdc on diode CR4, cathode. If failed, check and replace diode CR4 and capacitor C44.

l. Check for logic 0 on U33, pin 5. If failed, replace U33.

m. Check for +4.5±0.5Vdc on collector of transistor Q1. If failed, replace Q1.

n. Replace the following components, one by one U13, U14, U19, U15, U17, U24, U25, U26.

D.7.13 Preprogrammed Components Programming Procedure

a. Obtain the MVS software diskette RD6706589-0, or a master device IAW Table D-10.

Table D-10. Programmed Components

REF.DES	Microcircuit	RD6706589-0 File Name	Blank Component
U13	MC6706588-0	PF10953.JED	AT22V10-20GM/BB3B
U24	MC6706585-0	PF9079.BL	WS27C256F-55DMB
U25	MC6706586-0	PF9079.BM	WS27C256F-55DMB
U26	MC6706587-0	PF9079.BH	WS27C256F-55DMB

NOTE

Refer to Programmer's manufacturer operating instructions.

b. If using diskette, download the appropriate file to the programmer.

c. If using master device, install it on the appropriate socket on the programmer and download it's contents.

d. Obtain a blank, un-programmed microcircuit IAW Table D-10.

e. Install the blank microcircuit on the programmer and program the component.

f. Remove the programmed component from programmer.

g. Mark label with same microcircuit part number and software version as the master device. Use label DAT-59-652-1 for U24, U25, U26, and DAT-50-652-1 for U13, or equivalent.

h. Attach label to top of programmed component, covering window completely.

D.7.14 Final Testing

D.7.14.1 Final Testing Procedures

The final testing is performed on a reassembled UUT. The test setup provided in Figure D-12. shows the equipment used and cable hookup for the first procedural step.

D.7.14.2 Test Data Sheets

The test data sheets in Table D-9. are to be reproduced locally, as required, for recording the test results. The test data sheets must be completed each time a test section is performed. The completed test data sheets shall be retained.

D.7.14.3 Reparation for Test

a. Energize and adjust DMM to measure DC volts.

b. Energize power supply and adjust to 25.5±0.5Vdc. Deenergize power supply.

c. Set switch S3 on the test fixture to ANT.CABLE position.

d. Before connecting the UUT to the test setup, verify that the text fixture is deenergized.

e. Connect the UUT to the test setup IAW Figure D-12.

D.7.14.4 Final Testing

Perform the final testing IAW para. D.7.11.3.

SECTION VIII.

DISPLAY MODULE, P/N AY6706702-0

SECTION CONTENTS

		Page
D.8	DISPLAY MODULE, P/N AY6706702-0.	D-81
D.8.1	GENERAL.	D-81
D.8.2	TEST EQUIPMENT AND SPECIAL TOOLS REQUIRED.	D-81
D.8.3	MATERIALS REQUIRED.	D-81
D.8.4	GENERAL REPAIR REQUIREMENTS.	D-82
D.8.5	DISPLAY MODULE DISASSEMBLY.	D-83
D.8.6	CLEANING.	D-86
D.8.7	VISUAL INSPECTION	D-86
D.8.8	REPAIR.	D-86
D.8.9	PAINTING.	D-86
D.8.10	DISPLAY MODULE REASSEMBLY.	D-86
D.8.11	TESTING AND TROUBLESHOOTING.	D-87

D.8 DISPLAY MODULE, P/N AY6706702-0

D.8.1 General

This section provides additional repair procedures and maintenance information to those defined in Section IV of Chapter 3 in this manual for the display module, P/N AY6706702-0. Source, maintenance, and recoverability codes are listed below:

U.S. Army	PAFZZ
U.S. Marine Corps	PAFHH

D.8.2 Test Equipment and Special Tools Required

Refer to para. 3.4.2 for test equipment and special tools requirements.

D.8.3 Materials Required

Additional, repair materials and other consumable items to those defined in para. 3.4.3, are listed in Table D-11.

Table D-11. Additional Materials Required

Nomenclature	Part/Spec. No.	Appendix F Item No.
Adhesive	MIL-A-46146, Type III	19
Insulation Compound	MIL-I-46058 TYPE 1B31	9
Solder	SN63WRMAP3	23
Lacing Tape	MIL-T-43435-B3/BLK	11
Solder Sleeve	M83519/1-2	41
Overlap Tape	MIL-I-19166	42
Adhesive	RTV732	34
Insulation Tubing	M22129-24-W	43
Adhesive Epoxy	Minco, #15	44
Acetone	0A51	1
Methylethylketone (MEK)	ASTM-D-740	14
Antistatic Bag	3271576	33

D.8.4 General Repair Requirements (Refer to Figure D-17)

The following general requirements apply to the repair of display module.

CAUTION

The display module contains components subject to damage by electrostatic discharge. Use approved grounding procedures before touching, removing, or inserting CCA.

a. Use only SN63WRMAP3 tin/lead solder or approved equivalent.

CAUTION

Insulation compound must not be applied to any connector pins. Inadvertent application of compound to connector pins may require replacement of connector.

b. Apply uniform coating of MIL-I-146058 TYPE 1B31 insulation compound 0.003±0.002 in. thick, where compound has been removed during CCA repairs.

c. Bond rubber to bezel using MIL-A-46050, Type 2, Class 3 (RTV732) adhesive.

d. Bond heaters and sensors using Minco #15 epoxy adhesive.

e. Secure electro-luminescence (EL) and sensor leads using MIL-A-46146, Type 3 adhesive.

D.8.5 Display Module Disassembly

D.8.5.1 Removal

a. If necessary, remove display module IAW para. 3.4.5 in Chapter 3 of this manual.

D.8.5.2 Removal of Rubber. (Refer to Figure D-17)

a. Gently peel rubber (1) from the surface of the display top bezel (2).

CAUTION

Do not disassemble the display module. Figure D-17., Exploded View is provided for reference only.

D.8.5.3 Removal of Temperature Sensors (Refer to Figure D-17)

a. Gently peel off adhesive in three places that secure the failed sensor (3, 4) to the heater (5).

b. Gently peel off failed sensor (3, 4) from the surface of the heater (5).

c. Remove two solder sleeves that connect the failed sensor.

D.8.5.4 Removal of External Heater (Refer to Figure D-17)

a. Gently peel off adhesive in three places that secure sensors (3, 4) to the heater (5).

b. Gently peel off sensors (3, 4) from the surface of the heater (5).

c. Gently peel off heater (5) from the components on the display board. Make sure not to damage the components.

d. Cut insulating sleeves on connector P5 (6) pins 20 and 23. (Refer to display module schematic Figure 3-20.)

e. Using soldering iron, disconnect two wires from connector P5 (6) pins 20 and 23.

f. Remove heater (5) from the display module harness.

D.8.5.5 Removal of Internal Heater (Refer to Figure D-17)

CAUTION

Do not disassemble the display module. Figure D-17., Exploded View is provided for reference only.

a. Gently peel off RTV that secures EL to the display board.

b. Using soldering iron, disconnect two leads that connect the EL to the board.

c. Cut insulating sleeves on connector P5 (6) pins 21 and 24. (Refer to display module schematic Figure 3-20.)

d. Using soldering iron, disconnect two wires from connector P5 (6) pins 21 and 24.

e. Remove two heater (7) wires from the display module harness.

f. Pull out the EL (8) with attached heater (7) from the groove in the display module.

g. Gently peel off heater (7) from the EL (8). Make sure not damage the EL (8).

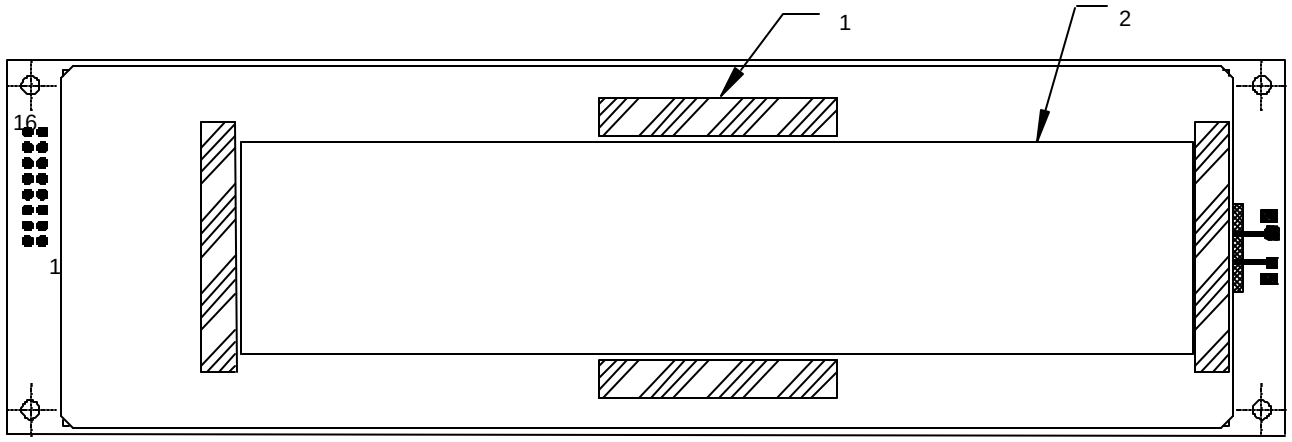

M129-31

FRONT VIEW

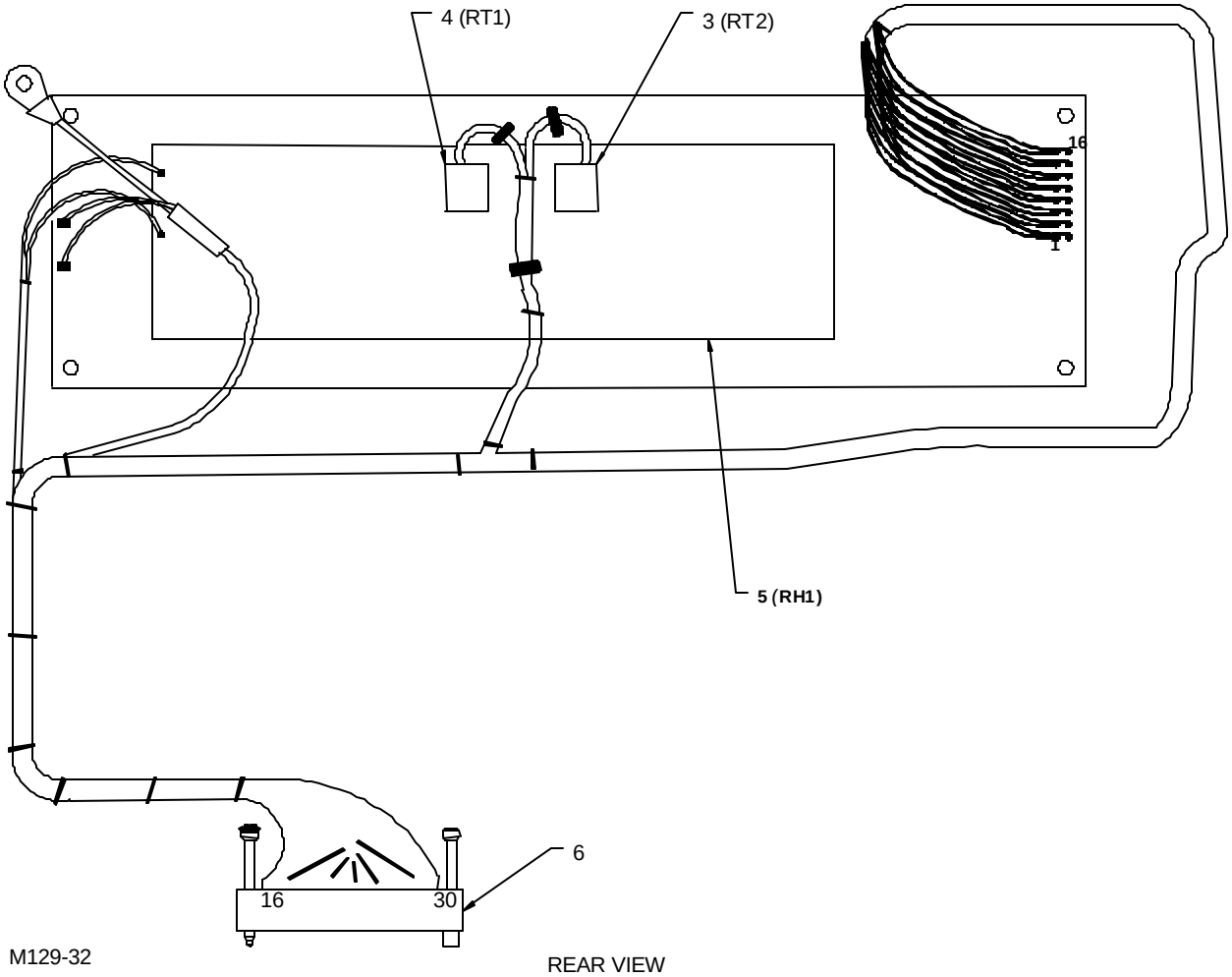

M129-32

REAR VIEW

Figure D-17. Display Module (Sheet 1 of 2)

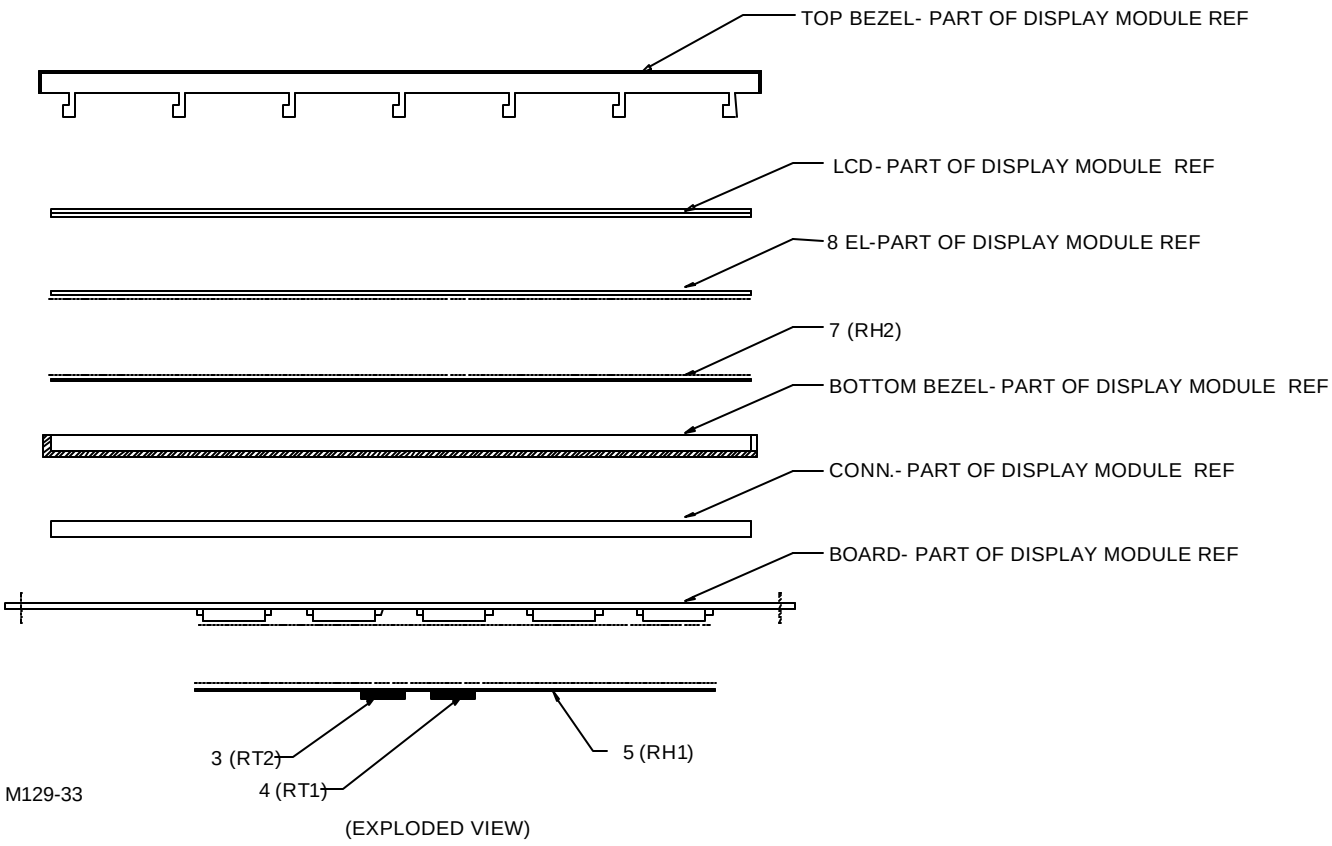

Figure D-17. Display Module (Sheet 2 of 2)

D.8.6 Cleaning

Refer to para. 3.1.4 in Chapter 3 of this manual.

D.8.7 Visual Inspection (Refer to Figure D-17)

a. Inspect connectors for damaged pins and foreign matter.

b. Inspect all components for secure attachment.

c. Inspect all parts for damage, wear, and deterioration.

d. Inspect all parts for nicks, scoring, dents, scratches, and broken runs.

e. Inspect all electronic components for indication of overheating, cracked bodies, loose terminals, broken leads, cold solder joints, and other indications of damage or deterioration.

D.8.8 Repair

Repair defective parts that were noticed during preshop analysis (para. D.3) and visual inspection (para. D.8.7).

D.8.9 Painting

No painting required on display module.

D.8.10 Display Module Reassembly

WARNING

Use MEK in a well ventilated area. Avoid breathing vapors. Keep away from flame.

NOTE

Do not accelerate adhesive curing by heating.

D.8.10.1 Installation of Internal Heater (Refer to Figure D-17)

a. Clean and remove all residue of epoxy adhesive from EL (8). Use an acid brush moistened in MEK solvent.

b. Apply epoxy adhesive #15 (Minco) to back side of EL (8) and heater (7), in uniform thickness. Place heater (7) on EL (8) using sufficient pressure to displace air but not adhesive. Remove excess adhesive.

c. Insert the EL (8) with attached heater (7) into the groove in the display module.

d. Slide new insulating sleeves on the two wires of the heater (7).

e. Using soldering iron, solder two heater wires to connector P5 (6) pins 21 and 24.

f. Shrink insulating sleeves using heat gun.

g. Using soldering iron, solder two leads of the EL (8) to the board.

h. Apply adhesive all around the EL (8) leads.

i. Tie heater (7) wires to display module harness, approximately every 1 inch of length, using lacing tape.

D.8.10.2 Installation of External Heater (Refer to Figure D-17)

a. Clean and remove all residue of epoxy adhesive from components on board, and on sensors (3, 4). Use an acid brush moistened in MEK solvent.

b. Apply epoxy adhesive #15 (Minco) to components and heater (5), in uniform thickness. Place heater (5) on components using sufficient pressure to displace air but not adhesive. Remove excess adhesive.

c. Slide new insulating sleeves on the two wires of the heater (5).

d. Using soldering iron, solder two heater wires to connector P5 (6) pins 20 and 23.

e. Shrink insulating sleeves using heat gun.

f. Apply epoxy adhesive #15 (Minco) to sensors (3, 4), in uniform thickness. Place sensors (3, 4) on heater (5) using sufficient pressure to displace air but not adhesive. Remove excess adhesive.

g. Apply adhesive in three places to secure the sensors (3, 4) wires.

h. Tie heater (5) wires to display module harness, approximately every 1 inch of length, using lacing tape.

D.8.10.3 Installation of Temperature Sensor (Refer to Figure D-17)

a. Clean and remove all residue of epoxy adhesive from heater (5) at replaced sensor (3, 4) location. Use an acid brush moistened in MEK solvent.

b. Place two new solder sleeves on replaced sensor wires and harness wires. Shrink solder sleeves using heat gun.

c. Apply epoxy adhesive #15 (Minco) to replaced sensor, in uniform thickness. Place sensor on heater (5) using sufficient pressure to displace air but not adhesive. Remove excess adhesive.

d. Apply adhesive in three places to secure the sensor (3, 4) wires.

D.8.10.4 Installation of Rubber (Refer to Figure D-17)

a. Clean and remove all residue of adhesive from display module (2) top bezel. Use an acid brush moistened in MEK solvent.

b. Apply adhesive RTV732 (clear) to rubber (1) in uniform thickness. Place rubber (1) on display module (2) top bezel using sufficient pressure to displace air but not adhesive. Remove excess adhesive.

D.8.10.5 Installation

Install display module IAW para. 3.4.6 in Chapter 3 of this manual.

D.8.11 Testing and Troubleshooting

Refer to para's 3.4.8 and 3.4.9 for testing and troubleshooting procedures.

SECTION IX.

TRANSCEIVER ASSEMBLY, P/NS AY6706571-0 AND AY6706571-2

SECTION CONTENTS

		Page
D.9	TRANSCEIVER ASSEMBLY, P/N'S AY6706571-0 AND AY6706571-2.	D-88
D.9.1	GENERAL.	D-88
D.9.2	TEST EQUIPMENT AND SPECIAL TOOLS REQUIRED.	D-88
D.9.3	MATERIALS REQUIRED.	D-90
D.9.4	GENERAL REPAIR REQUIREMENTS.	D-90
D.9.5	TRANSCEIVER ASSEMBLY DISASSEMBLY.	D-92
D.9.6	CLEANING.	D-101
D.9.7	VISUAL INSPECTION.	D-101
D.9.8	REPAIR.	D-101
D.9.9	PAINTING.	D-101
D.9.10	TRANSCEIVER ASSEMBLY REASSEMBLY.	D-101
D.9.11	TESTING.	D-104
D.9.12	TROUBLESHOOTING.	D-116
D.9.13	FINAL TESTING.	D-120

D.9 TRANSCEIVER ASSEMBLY, P/N'S AY6706571-0 AND AY6706571-2

D.9.1 General

This section provides repair procedures and maintenance information for the M94 Muzzle Velocity System (MVS) transceiver assembly, P/Ns AY6706571-0 and AY6706571-2. Source, maintenance, and recoverability codes are listed below:

U.S. Army	PAODD
U.S. Marine Corps	PAOHD

D.9.2 Test Equipment and Special Tools Required

Test equipment and special tools requirements are listed in Table D-12. Unless otherwise specified, the test equipment and special tools listed below will be used for testing the transceiver assembly. Each commercially available item of test equipment can be replaced by equipment equivalent to that listed. The microwave items of the test equipment are interconnected and calibrated IAW procedures in Appendix D, Section X.

Table D-12. Test Equipment and Special Tools Required

Nomenclature	Part/Spec. No.	Figure
Test Cable, Conventional Transceiver	RSL, P/N WA6708067-0	C-27,56
Test Set, Transceiver	RSL, P/N AY6708043-0	C-27, 57
Doppler Simulator	RSL, P/N AY6706690-0	C-27, 22
Torque Wrench, 8in. lbs, 5/16”	M/A COM, 2098-0275-54	C-27, 58
Microwave Frequency Counter	EIP Model 535	C-27, 26
Digital Multimeter (2)	Fluke, Model 77-2	C-27, 5
Electronic Equipment Tool Kit	PPL863	C-27, 11
Function Generator	Wavetek, Model 178	C-27, 41
Oscilloscope	Hewlett Packard, Model 1070B	C-27, 44
Power Supply, DC (0-40 V, 5 A)	Lambda, LLS-9040	C-27, 24
Power Supply, DC (0-40 V, 1 A), 2 each	Lambda, LLS-5040	C-27, 23
Coaxial Cable, BNC, Male-To-Male, 50 Ω (3)	Local Manufacture	N/A
Coaxial Cable, SMA, Male-To-Male, 50 Ω (3)	Local Manufacture	N/A
Coaxial Cable, SMC Female/BNC Male, 50	Local Manufacture	N/A
WR90/SMA Female Adapter (5)	Midwest Microwave, 3625	C-27, 59
RMS Voltmeter	Hewlett-Packard, Model 3400A	C-27, 60
Power Meter	Hewlett-Packard, Model 432B	C-27, 61
Thermistor Mount	Hewlett-Packard, Model 8478B	C-27, 62
Standard Gain Horn	Narda, Model 640	C-27, 18
Pin Switch	General Microwave, Model 9114	C-27, 59
Phase Shifter	Midisco, Model MDC1089-1	C-27, 59
Fixed Coaxial Attenuator, 20dB	Weinschel, Model 4M	C-27, 14
Variable Waveguide Attenuator	Hewlett-Packard, Model X382A	C-27, 59
Wave guide Directional Coupler	Hewlett-Packard, Model X752D	C-27, 59
Termination, 50Ω	Midwest Microwave, 2444M	C-27, 59
SMA Female/SMA Female Adapter	Midwest Microwave, 2595	C-27, 40
N-Type Female/SMA Male Adapter	Midwest Microwave, 2682	C-27, 59
ESD Work Station Kit	M87893-02	C-27, 13

D.9.3 Materials Required

Repair materials and other consumable items required are listed in Table D-13.

Table D-13. Materials Required

Nomenclature	Part/Spec. No.	Appendix F Item No.
Paint	Color No.383 IAW FED-STD-595 CARC	35
Adhesive	MIL-A-46146, Type III	19
Insulation Compound	MIL-I-46058 TYPE1 B31	9
Solder	SN63WRMAP3	23
Lacing Tape	MIL-T-43435-B3/BLK	11
Bus Wire	QQ-W-343/S-22-S1T	29
Sealing Compound	83-31	16
Primer	747-55	17
Adhesive	S1125	2
Adhesive	RTV732	34
Acetone	OA51	1
Lock wire	MS20995-C22	13
Methylethylketone (MEK)	ASTM-D-740	14
Antistatic Bag	3271576	33

D.9.4 General Repair Requirements

D.9.4.1 General

The transceiver does not contain high voltages or hazardous material. The transceiver radiates low-power X-band microwave energy; therefore RF safety precautions should be taken.

D.9.4.2 RF Safety

The transceiver radiates microwave energy at approximately 1 mW/cm^2 power density at the antenna surface. Maximum safe level is 10 mW/cm^2 IAW safety level of electro-magnetic radiation with respect to personnel. The radar output field does not exceed the safety levels required by ANSI C95.1 - 1982, hazard for humans by electromagnetic fields at normal or malfunction operation conditions. The transceiver output power is less than 220 mW, which is at any time three orders of magnitude below the requirements of MIL-STD-1358B. Although transmitted power density is less than the safety level, comply with the following warning when the transceiver is transmitting:

WARNING

Do not point the radiating surface towards any personnel. Do not bring eyes to close contact with the radiating surface. Use absorbing materials in front of the radiating surface whenever possible.

CAUTION

This equipment contains assemblies subject to damage by electrostatic discharge. Use approved grounding procedures before touching, removing or inserting printed wiring assemblies.

CAUTION

Exercise extra caution while handling the transceiver and its electrical terminal. Use grounding strap on both hands.

a. Do not assemble transceiver assembly or covers for at least 24 hours after applying RTV adhesive to internal elements or transceiver assembly gasket.

b. Use torque wrench 2098-0275-54 (mfr M/A COM) for final tightening of the RF cable WA6706563-0. Do not over torque.

c. Tag and identify wires before disconnecting.

d. Use only SN63WRMAP3 tin/lead solder.

CAUTION

Insulation compound must not be applied to any connector pins. Inadvertent application of compound to connector pins may require replacement of connector.

e. Apply uniform coating MIL-I-146058 TYPE1 B31 insulation compound after soldering of wires.

f. Bond boots to D-type connectors and cables using Raychem S1125 adhesive. Apply heat for curing using heat gun.

g. Apply primer MIL-S-22473 grade T and sealing compound MIL-S-22473 grade CV to threads.

h. Verify that screws are fully secured with lock washers before final assembly. Also, verify that the transceiver is clean from any residues of solder or foreign objects.

D.9.5 Transceiver Assembly Disassembly

NOTE

Disassemble transceiver assembly only to the extent necessary to perform the required maintenance task. Refer to Figures D-18. and D-19. in all disassembly procedures.

D.9.5.1 Separation of Bracket Assembly

If necessary, separate the bracket assembly from the transceiver assembly in accordance with para. 3.3.5.1 of Chapter 3 in this manual.

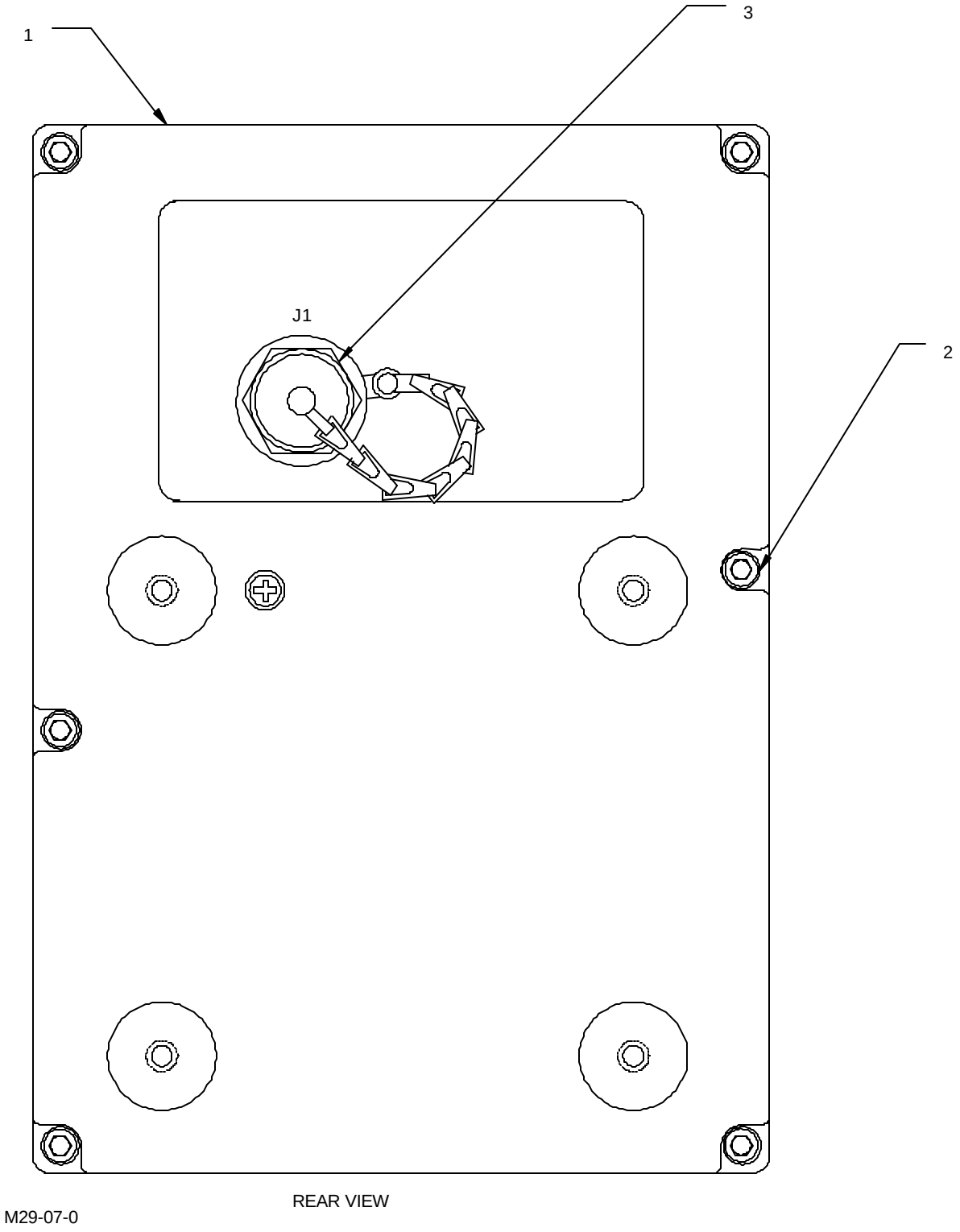

Figure D-18. Transceiver Assembly, AY6706571-0 (Sheet 1 of 3)

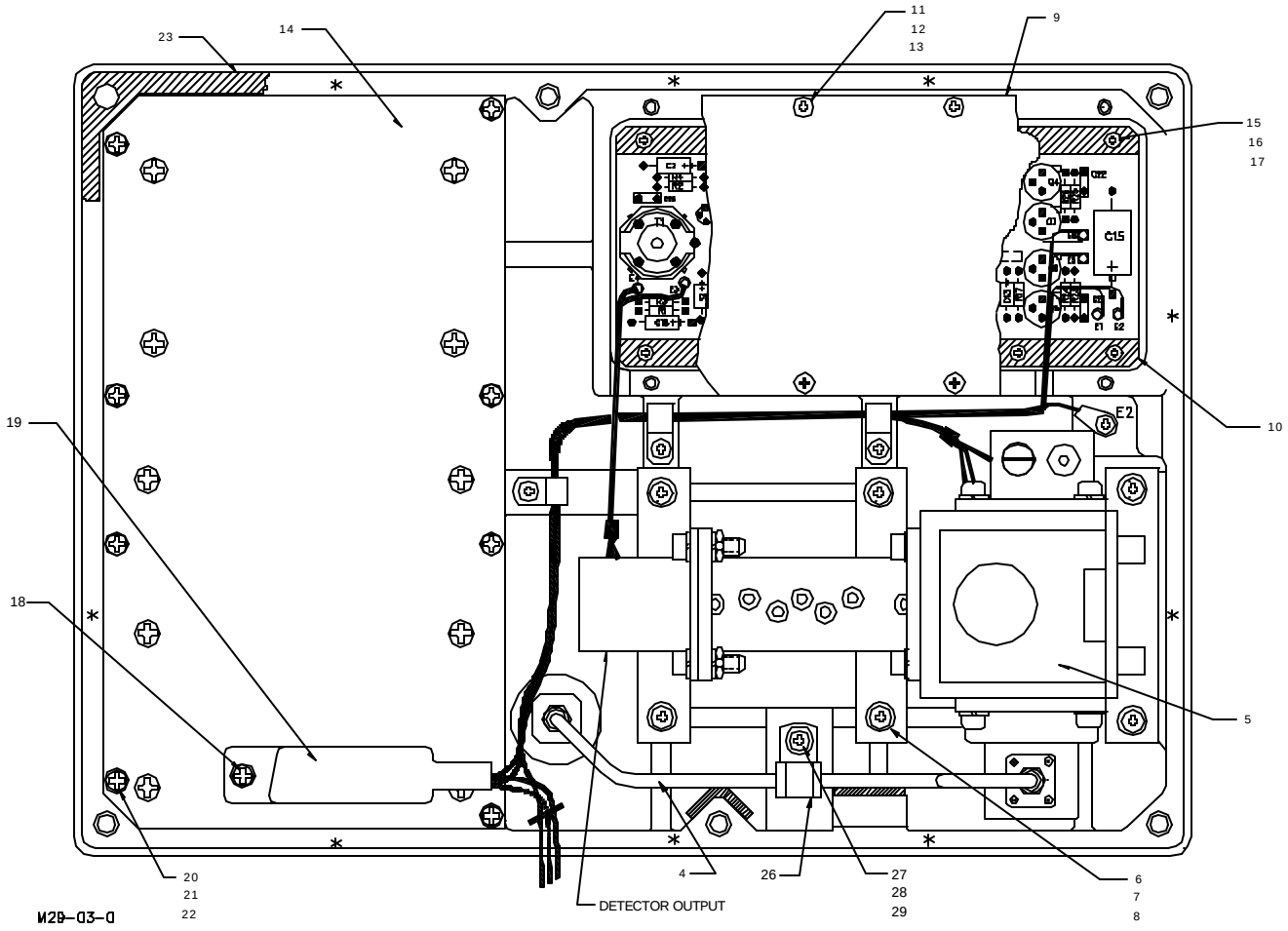

Figure D-18. Transceiver Assembly, AY6706571-0 (Sheet 2 of 3)

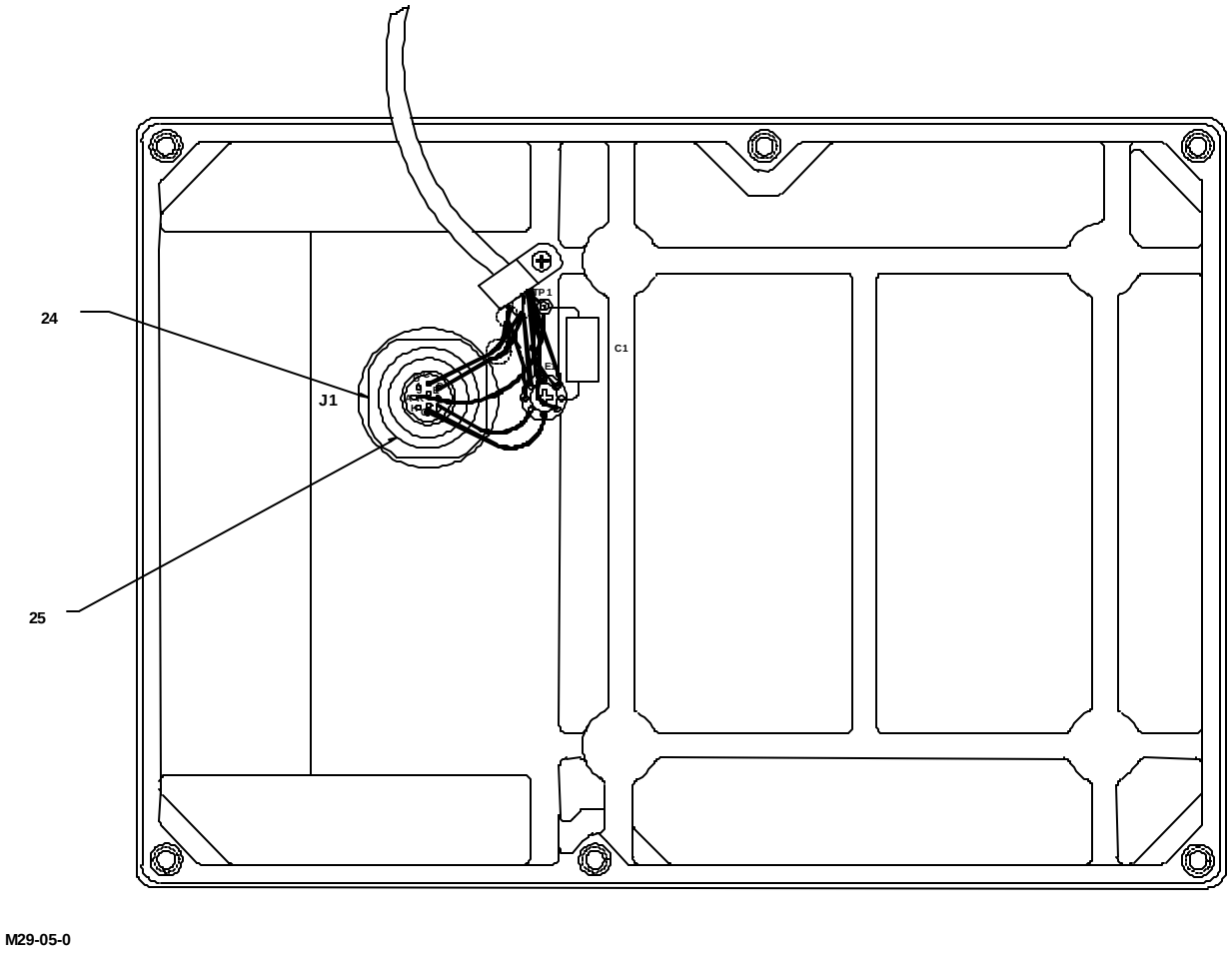

BACK COVER ASSEMBLY

Figure D-18. Transceiver Assembly, AY6706571-0 (Sheet 3 of 3)

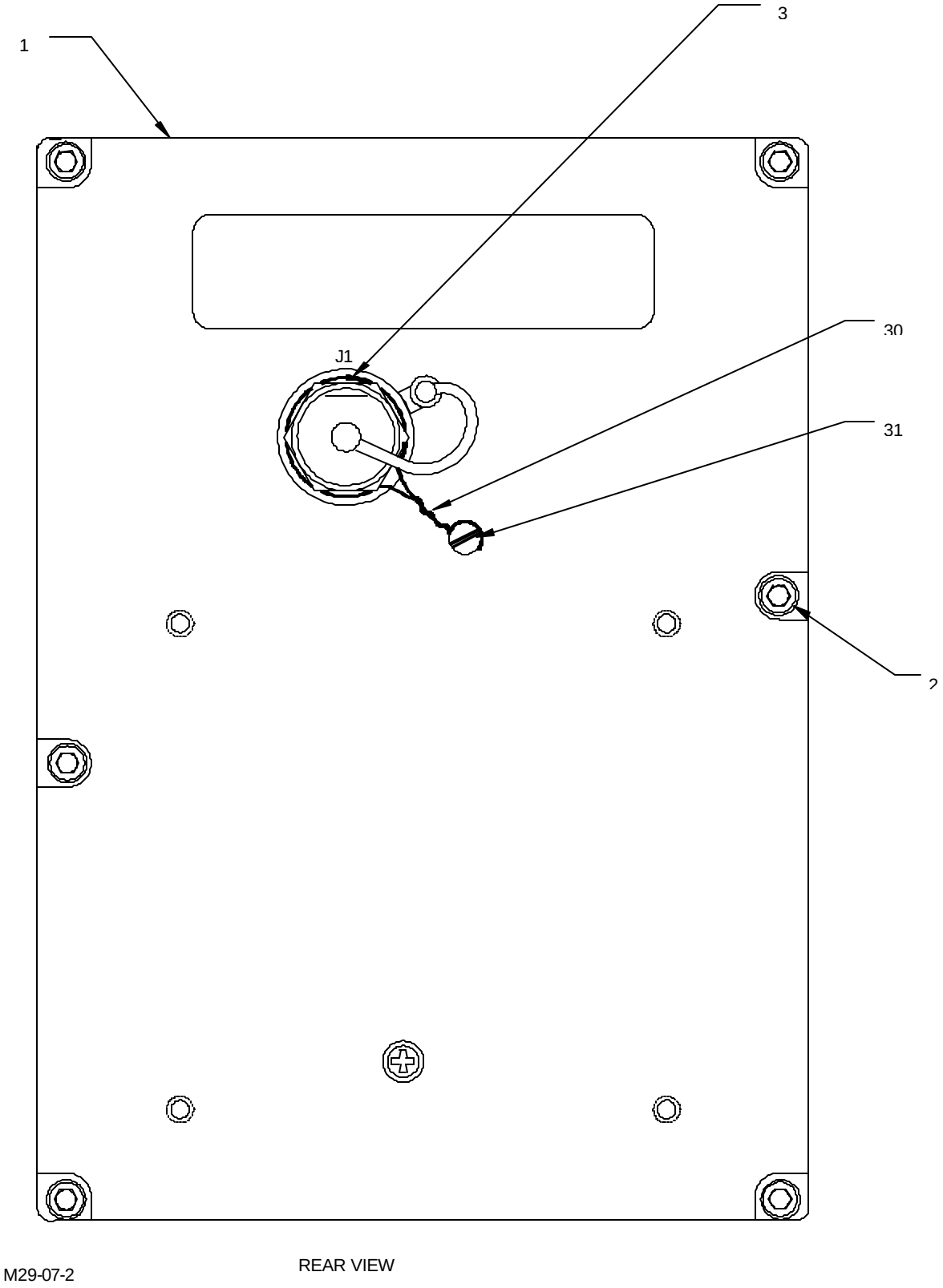

Figure D-19. Transceiver Assembly, AY6706571-2 (Sheet 1 of 3)

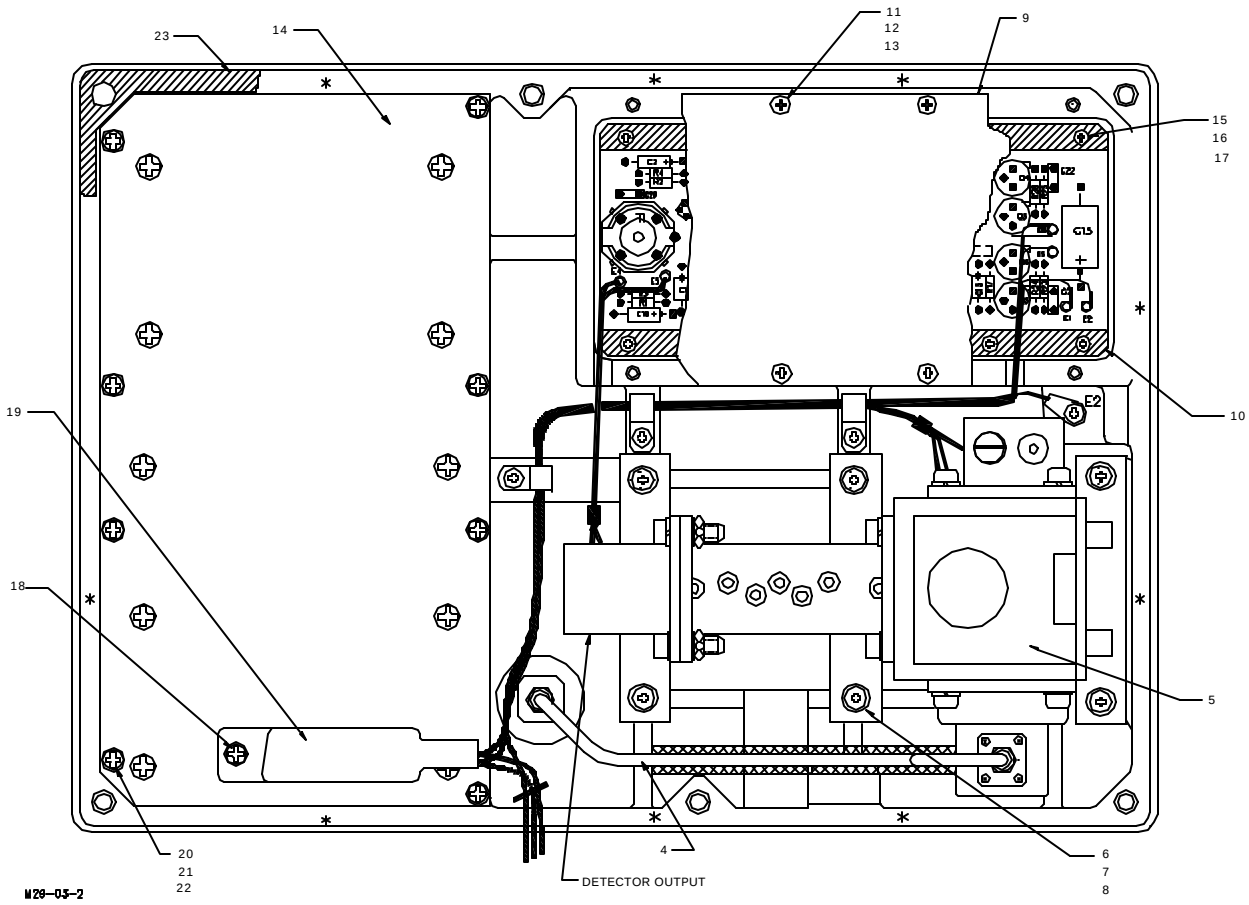

Figure D-19. Transceiver Assembly, AY6706571-2 (Sheet 2 of 3)

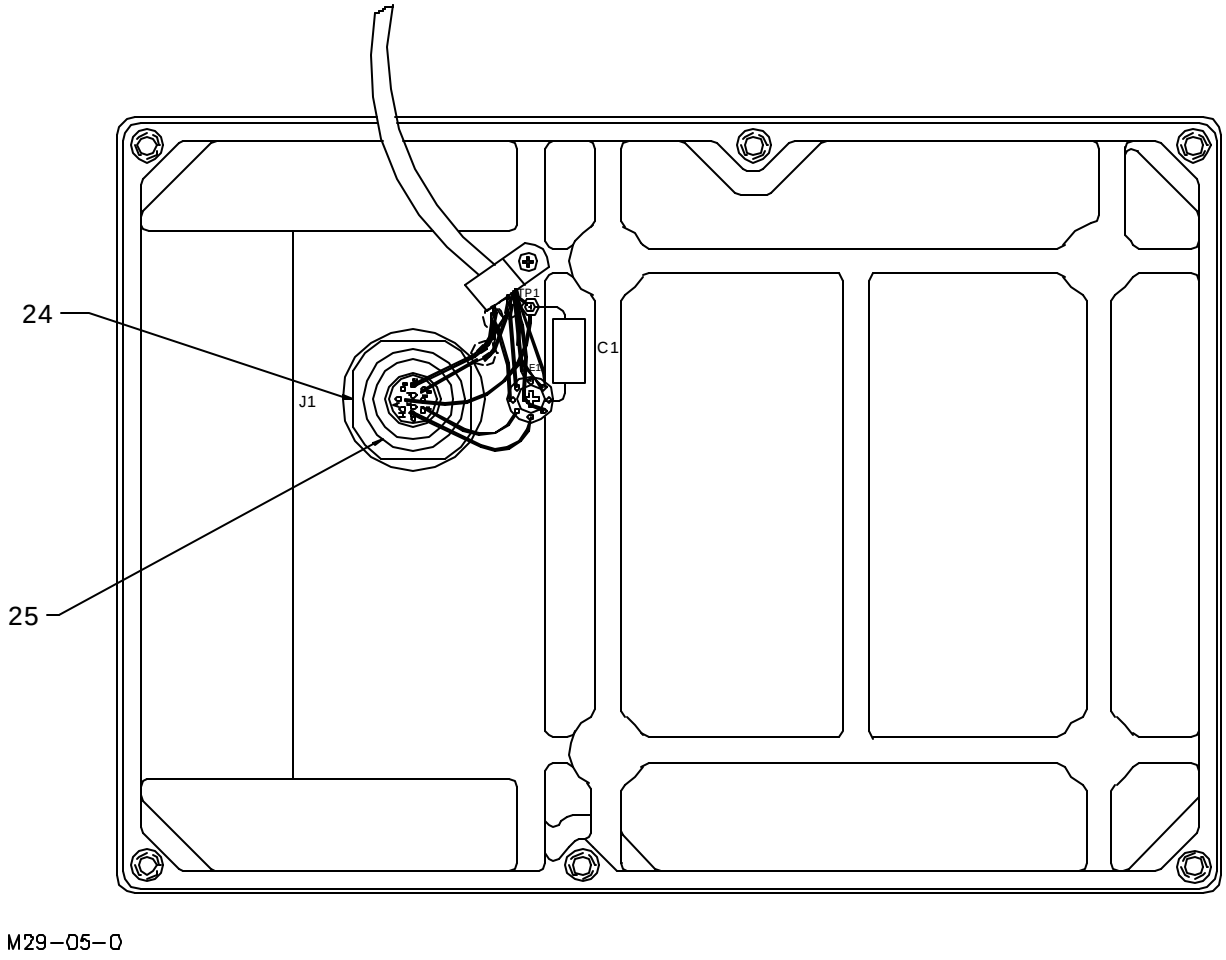

Figure D-19. Transceiver Assembly, AY6706571-2 (Sheet 3 of 3)

D.9.5.2 Separation of Transceiver Assembly (Refer to Figures D-18. and D-19)

CAUTION

Separate the two halves of the transceiver assembly carefully to prevent damage to wiring harness attached to both halves.

a. Loosen six hex captive screws (2) using a millimeter type hex key.

b. Carefully separate transceiver assembly (1) into two halves.

D.9.5.3 Removal of RF Cable

D.9.5.3.1 Configuration AY6706571-0. (Refer to Figures D-18. and D-20.)

a. Remove screw (27), lock washer (28) and flat washer (29) which hold clamp (26). Leave clamp on RF cable (4).

b. Loosen two SMA connectors of the RF cable (4) using 5/16” hex wrench.

c. Unscrew two SMA connectors and remove RF cable (4).

d. Remove clamp (26) from RF cable (if required).

D.9.5.3.2 Configuration AY6706571-2. (Refer to Figures D-19. and D-20)

a. Loosen two SMA connectors of the RF cable (4) using 5/16” hex wrench.

b. Unscrew two SMA connectors and remove RF cable (4).

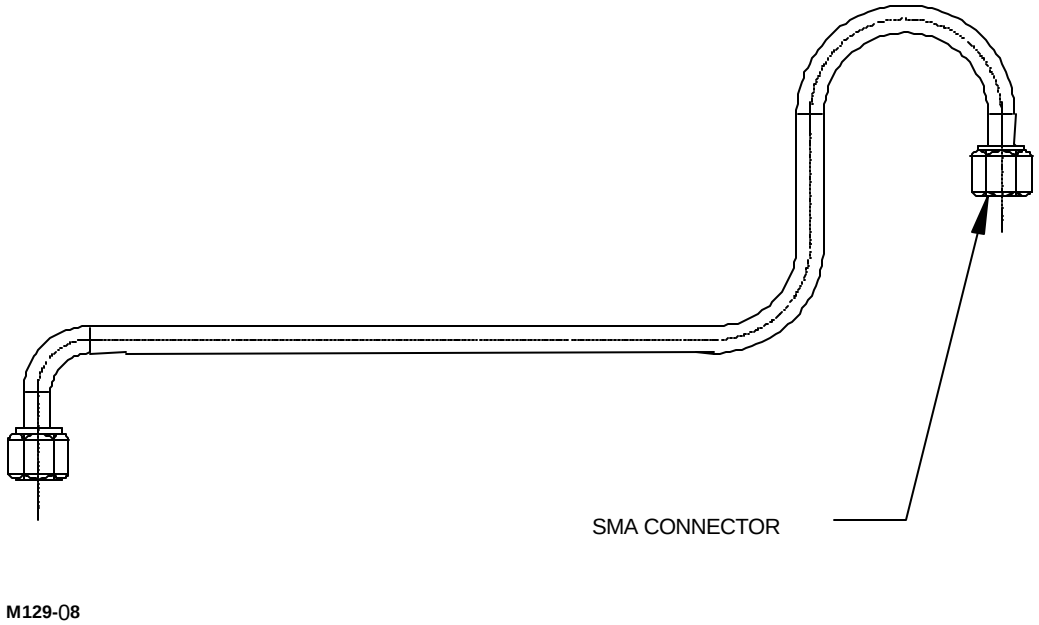

Figure D-20. RF Cable, P/N WA6706563

D.9.5.4 Removal of Transceiver (Refer to Figures D-18. and D-19)

CAUTION

Detector output pin must be grounded at all times.

a. Remove RF cable (4) IAW para. D.9.5.3.

b. Remove six screws (6), six lock washers (7) and six flat washers (8) which attach the transceiver (5) to the antenna base.

c. Short circuit the transceiver's detector output using bus wire QQ-W-343/S-22S1T. First connect wire to the ground lug, and then to the detector output pin.

d. Using soldering iron, disconnect one wire from detector output pin, and two wires from the ground lug.

e. Using soldering iron, disconnect three wires from the oscillator input pin and ground lug.

f. Place plastic cap for SMA connector on the transceiver output connector.

g. Remove transceiver (5) and place it in an antistatic bag. Do not remove shorting bus wire.

D.9.5.5 Removal of Gasket (Refer to Figures D-18. and D-19.)

a. Gently peel gasket (23) from the surface of the transceiver assembly (1).

b. Remove remaining gasket material with a soft hand tool in order not to nick or scratch housing surface.

D.9.5.6 Removal of Doppler Amplifier Circuit Card Assembly (CCA) (Refer to Figures D-18. and D-19.)

a. Remove eight screws (11), eight lock washers (12) and eight flat washers (13) from CCA cover (9).

b. Remove Cover (9).

c. Tag and identify six wires connected to CCA.

d. Using soldering iron, disconnect six wires.

e. Remove 12 screws (15), 12 lock washers (16) and 12 flat washers (17) from CCA (10).

f. Remove CCA (10) from transceiver assembly (1) and place it in an antistatic bag.

D.9.5.7 Removal of Power Supply Module (Refer to Figures D-18. and D-19)

a. Loosen two screw locks (18) securing connector (19) to the module (14).

b. Remove eight screws (20), eight lock washers (21) and eight flat washers (22) from module (14).

c. Remove module (14) from transceiver assembly (1) and place it in an antistatic bag.

D.9.5.8 Removal of Connector

D.9.5.8.1 Configuration AY6706571-0 (Refer to Figure D-18)

a. Remove wires from connector (24).

b. Unscrew protection cap (3) from the connector (24).

c. Using connector pliers, loosen and then remove the connector (24) nut.

d. Remove the protection cap (3).

e. Remove connector (24) from the transceiver assembly (1).

f. Place the connector nut on the connector.

g. Remove grommet nut (25) from connector (24).

D.9.5.8.2 Configuration AY6706571-2 (Refer to Figure D-19)

a. Remove wires from connector (24).

b. Remove secure wire (30).

c. Unscrew protection cap (3) from the connector (24).

d. Using connector pliers, loosen and then remove the connector (24) nut.

e. Remove the protection cap (3).

f. Remove connector (24) from the transceiver assembly (1).

g. Place the connector nut on the connector.

h. Remove grommet nut (25) from connector (24).

D.9.6 Cleaning

Refer to para. 3.1.4 in Chapter 3 of this manual.

D.9.7 Visual Inspection

a. Inspect external connector for damaged pins and foreign matter.

b. Inspect transceiver assembly for cracks, corrosion and damaged hardware.

c. Inspect transceiver assembly for damaged circuit cards, and damaged or missing components.

d. Inspect antenna radome for scratches and pits. These conditions shall be acceptable providing the laminated fiber is not cut, disturbed, or exposed.

e. Inspect gasket for deterioration, punctures, and tears.

f. Inspect all wiring for bent or broken leads, cracked, frayed, deteriorated, worn, overheated or burnt insulation, and security of attachment. Check lacing for secure attachment.

D.9.8 Repair

Repair defective parts that were noticed during preshop analysis (para. D.3) and visual inspection (para. D.9.7).

D.9.9 Painting

Refer to para. 3.1.9 in Chapter 3 of this manual.

D.9.10 Transceiver Assembly Reassembly

D.9.10.1 Assembly of Connector

D9.10.1.1 Configuration AY6706571-0. (Refer to Figure D-18.)

a. Insert connector (24) into the transceiver assembly (1).

b. Install the protection cap's (3) chain ring on the connector (24).

c. Using connector pliers, secure connector (24) with its nut.

d. Install and fasten grommet nut (25) on connector (24).

e. Insert wires into connector (24).

D.9.10.1.2 Configuration AY6706571-2 (Refer to Figure D-19)

a. Insert connector (24) into the transceiver assembly (1).

b. Install the protection cap's (3) chain ring on the connector (24).

c. Using connector pliers, secure connector (24) with it's nut.

d. Install and fasten grommet nut (25) on connector (24).

e. Insert wires into connector (24).

f. Install secure wire (30) using screw (31).

D.9.10.2 Installation of Power Supply Module (Refer to Figures D-18. and D-19)

CAUTION

Make sure to match oscillator operating voltage with power supply module output voltage.

a. Place module (14) into transceiver assembly (1).

b. Install and fasten eight screws (20), eight lock washers (21) and eight flat washers (22) onto Module (14).

c. Plug connector (19) to the module (14), and secure by fastening two screw locks (18).

D.9.10.3 Installation of Doppler Amplifier CCA (Refer to Figures D-18. and D-19)

a. Place CCA (10) into transceiver assembly (1).

b. Install and fasten 12 screws (15), 12 lock washers (16) and 12 flat washers (17) onto CCA (10).

c. Using soldering iron, connect six wires to CCA (10).

d. Remove identification tags from wires.

e. Attach CCA cover (9) with eight screws (11), eight lock washers (12) and eight flat washers (13).

D.9.10.4 Installation of Gasket (Refer to Figures D-18. and D-19)

WARNING

Use MEK in a well ventilated area. Avoid breathing vapors. Keep away from flame.

NOTE

Do not accelerate RTV curing by heating.

a. Clean and remove all residue of RTV from transceiver assembly housing. Use an acid brush moistened in MEK solvent.

b. Remove the adhesive protection tape from the gasket. Place gasket (23) on housing using sufficient pressure.

D.9.10.5 Installation of Transceiver (Refer to Figures D-18. and D-19)

CAUTION

Detector output pin must be grounded at all times.

a. Using soldering iron, connect three wires to the oscillator input pin and ground lug.

b. Using soldering iron, connect one wire to detector output pin, and two wires to the ground lug. Do not remove shorting wire during soldering.

c. Disconnect the shorting wire first from detector output pin, and then from ground lug.

d. Place transceiver (5) into transceiver assembly (1).

e. Attach the transceiver (5) to the antenna base with six screws (6), six lock washers (7), and six flat washers (8).

f. Install RF cable (4) IAW para. D.9.10.6.

D.9.10.6 Installation of RF Cable

D.9.10.6.1 Configuration AY6706571-0 (Refer to Figures D-18. and D-20)

a. Place clamp (26) on RF cable (4).

b. Install RF cable (4) into its groove on the transceiver assembly (1).

c. Hand tighten two SMA connectors of RF cable (4) to transceiver (5) and antenna connector.

d. Fasten two SMA connectors of the RF cable (4) using 5/16” hex wrench

e. Install and fasten screw (27), lock washer (28), and flat washer (29) which hold clamp (26).

D.9.10.6.2 Configuration AY6706571-2 (Refer to Figures D-19. and D-20)

a. Install RF cable (4) into its groove on the transceiver assembly (1).

b. Hand tighten two SMA connectors of RF cable (4) to transceiver (5) and antenna connector.

c. Fasten two SMA connectors of the RF cable (4) using 5/16” hex wrench

D.9.10.7 reassembly of Transceiver Assembly (Refer to Figures D-18. and D-19)

a. Attach the two halves of the transceiver assembly (1) to each other.

b. Fasten six hex captive screws (2).

D.9.11 Testing

WARNING

Do not point the radiating surface towards any personnel. Do not bring eyes to close contact with the radiating surface. Use absorbing materials in front of the radiating surface whenever possible.

NOTE

Hereafter, the transceiver assembly will be referred to as the Unit Under Test (UUT).

D.9.11.1 Preparation for Test

This test is conducted in two major steps, RF section test (D.9.11.2.), performed on a disassembled UUT, and functional test (D.9.11.3.), performed on assembled UUT. The test setups are as shown in Figures D-21., D-22., D-23. and D-27. Figures D-24., D-25., and D-26. are detailed illustrations of the special testers.

a. Disassemble the UUT IAW para. D.9.5.2.

b. Remove the RF cable IAW para. D.9.5.3.

c. Install the RF cable on the transceiver in such a way that its outer edge points out of the transceiver base.

d. Energize power supply (PS1) and adjust for +28±0.5Vdc. Deenergize power supply.

e. Energize power supply (PS2) and adjust both outputs for 12±0.1Vdc. Deenergize power supply.

f. Energize and adjust Digital Multimeter (DMM)1 to measure DC volts.

g. Energize and adjust DMM2 to measure high DC current.

h. Set variable attenuator to 30dB.

i. Before connecting the UUT to the test setup, verify that both power supplies are deenergized.

j. Connect the UUT to the test setup IAW Figure D-21.

D.9.11.2 RF Section Test

D.9.11.2.1 RF Section Test Procedures.

The test setup provided in Figure D-21. shows the equipment used and cable hookup for the first procedural step. Refer to Figure D-25. for schematic of the special test equipment.

D.9.11.2.2 Test Data Sheets

The test data sheets in Table D-14. are to be reproduced locally, as required, for recording the test results. The test data sheets must be completed each time a test section is performed. The completed test data sheets shall be retained and used as a troubleshooting aid.

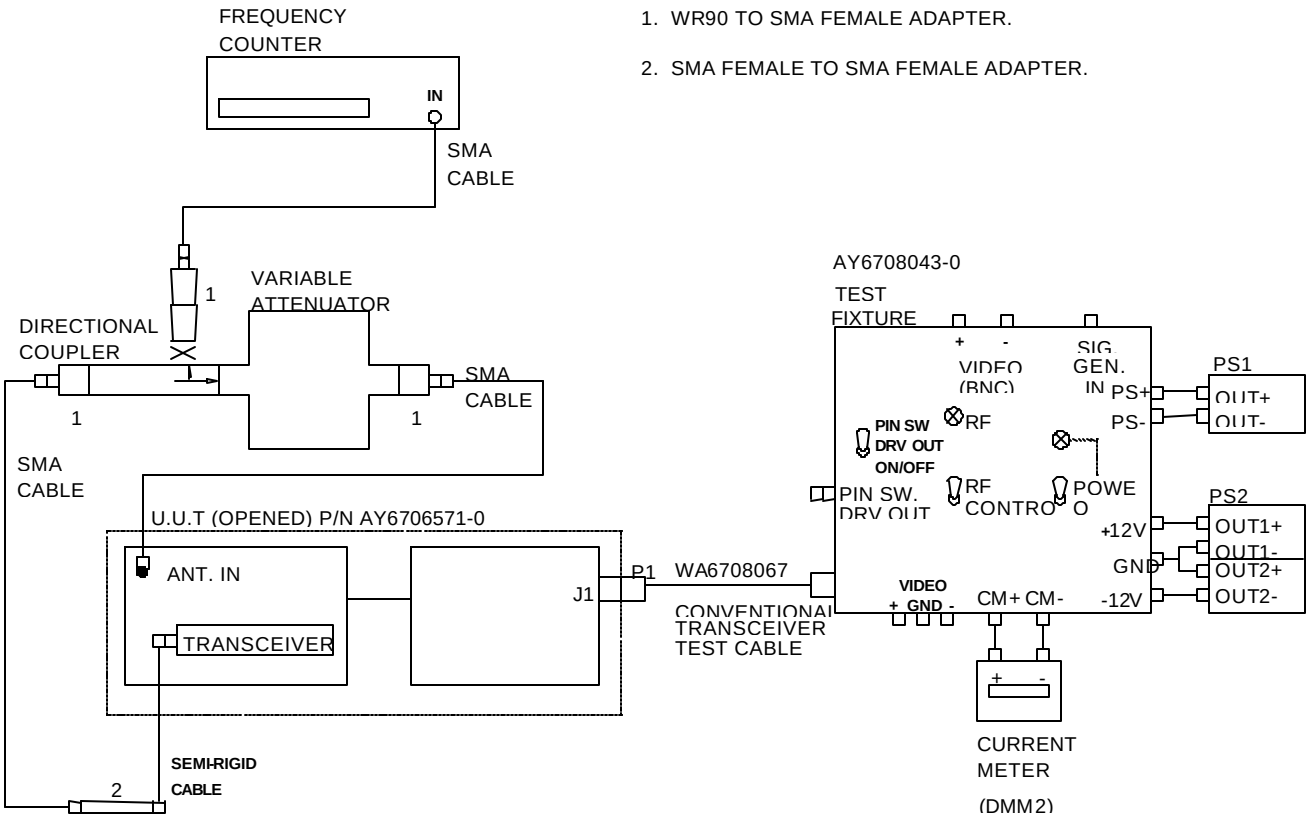

Figure D-21. Transceiver Assembly Power Supply and Transmitted Frequency Test Set-up

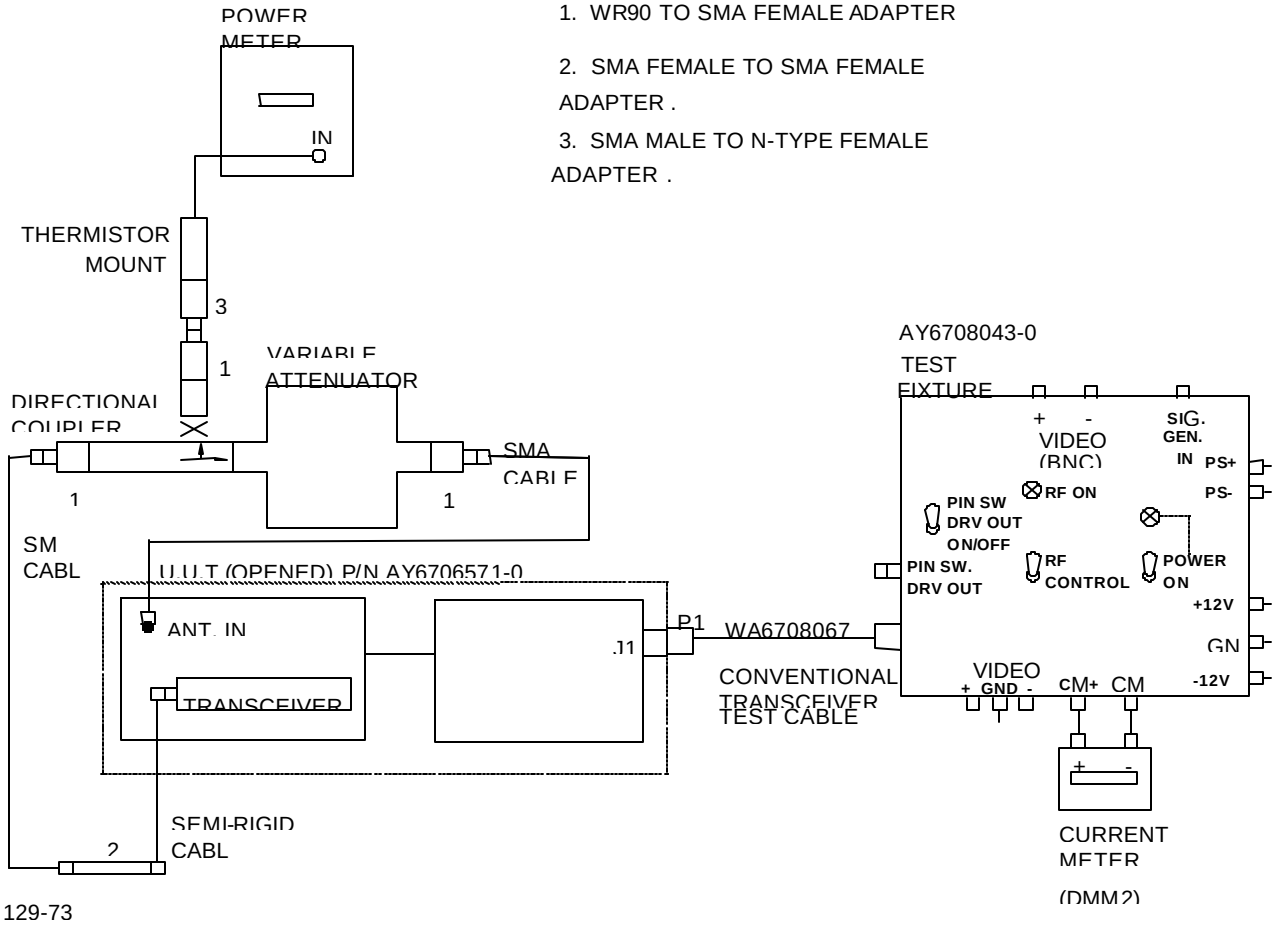

Figure D-22. Transceiver Assembly Transmitted Power Test Setup

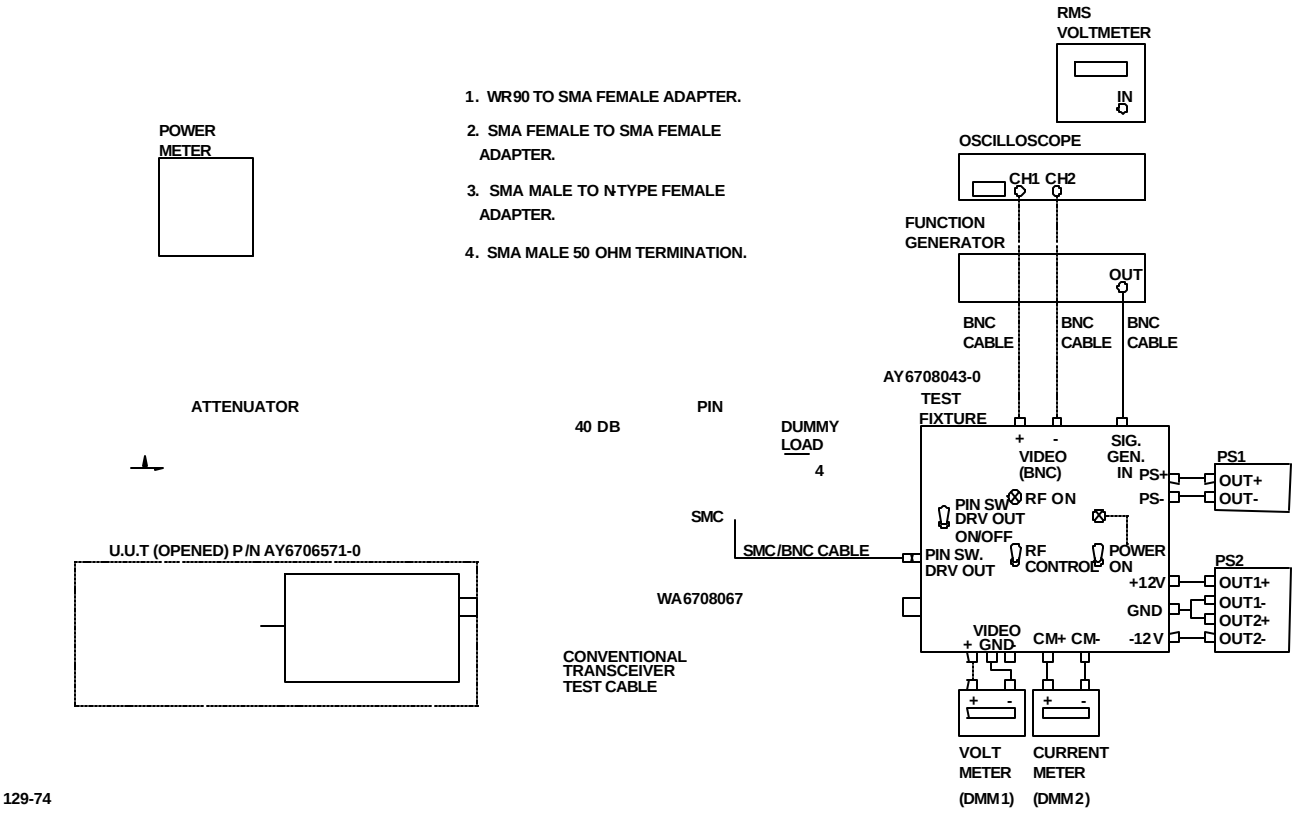

Figure D-23. Transceiver Assembly Sensitivity Test Set-up

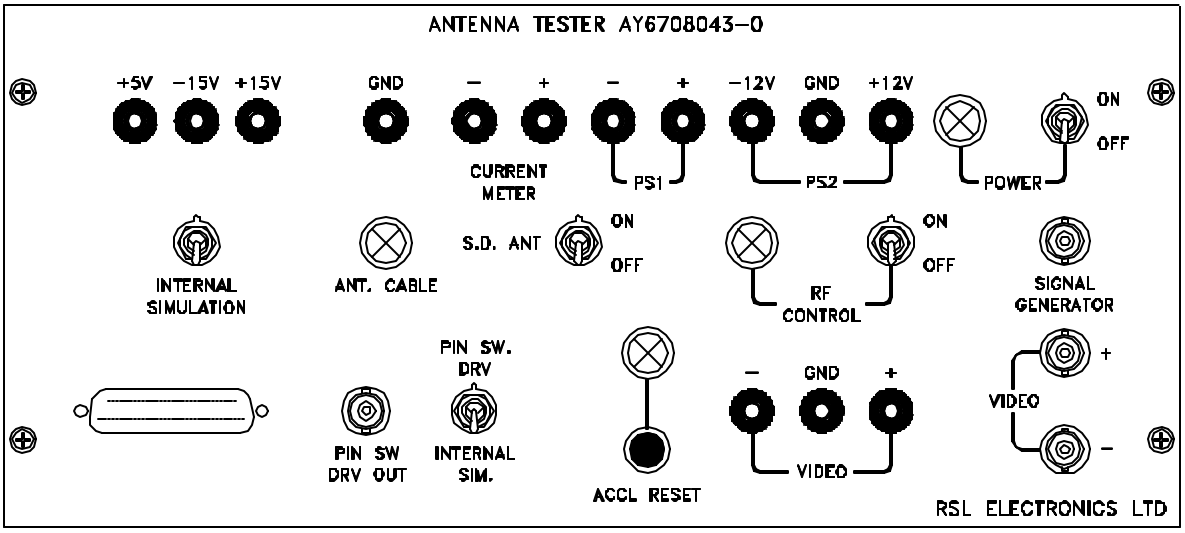

Figure D-24. Transceiver Assembly RF Section Test Fixture

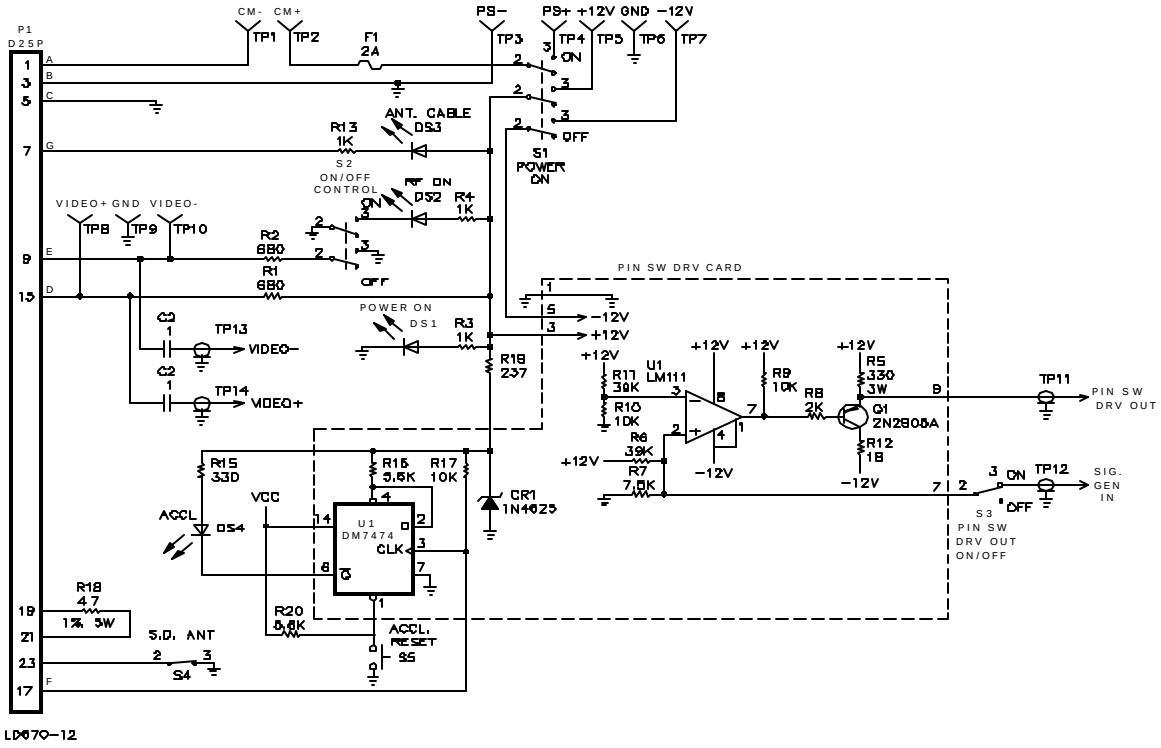

Figure D-25. Transceiver Assembly RF Section Test Fixture Schematic

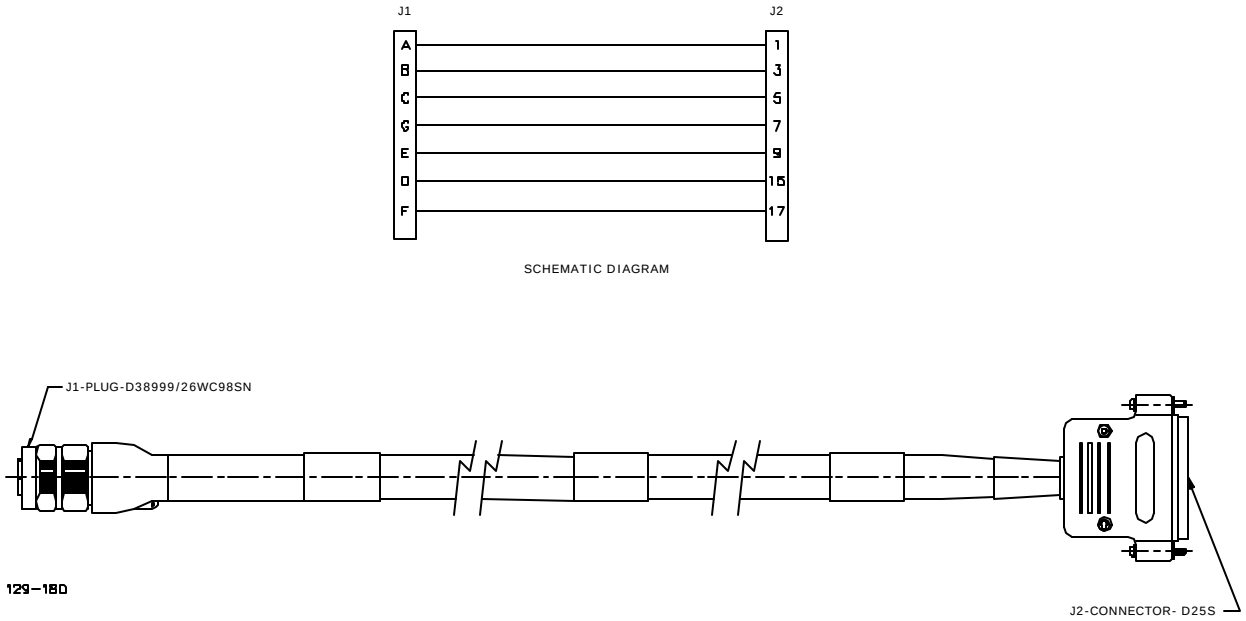

Figure D-26. Transceiver Assembly RF Section Test Cable

D.9.11.2.3 On/Off Control and Current Consumption Test

The purpose of this test is to ensure the proper operation of the transceiver unit for power consumption and on/off control. Refer to para. D.9.12.1. for troubleshooting procedures.

a. Set POWER and RF CONTROL switches on the test fixture to OFF.

b. Energize both power supplies (PS1, PS2), and all other test equipment. Turn on the POWER switch on the test fixture.

c. Verify standby current consumption on current meter DMM2 is 40mA to 100mA.

d. Verify ANT.CABLE LED on the test fixture is on.

e. Push ACCL.RESET button. Verify ACCL. LED is off.

f. Tap the power supply cover by hand to activate the acceleration switch mounted on the power supply.

g. Verify ACCL. LED is on.

h. Set RF CONTROL switch on the test fixture to ON.

i. Verify operating current consumption on current meter DMM2 is 700±200mA.

j. Connect DMM1 positive input to VIDEO[+] terminal and negative input to VIDEO[GND] terminal on the test fixture.

k. Verify VIDEO[+] DC voltage level on DMM1 is 9.30±0.60Vdc.

l. Connect DMM1 positive input to VIDEO[-] terminal on the test fixture.

m. Verify VIDEO[-] DC voltage level on DMM1 is 2.7 0.3Vdc.

n. Set RF CONTROL and POWER switches on the test fixture to OFF and disconnect DMM1 from the test fixture.

D.9.11.2.4 Transmitted Frequency Test

The purpose of this test is to ensure the proper accuracy of the transmitted frequency. Refer to para. D.9.12.2. for troubleshooting procedures.

a. Verify the frequency counter is properly connected to the directional coupler. Set the frequency counter to BAND 3 suitable for measuring 10GHz.

b. Set the variable attenuator to 0dB.

c. Turn on the POWER switch of the test fixture.

d. Set RF CONTROL switch on test fixture to ON.

e. Verify the transmitted frequency on the frequency counter is measured at 10525±6MHz. After measuring, adjust frequency to 10525±1MHz. Use the frequency adjustment screw located on the transceiver AY6706557-0.

f. Set RF CONTROL and POWER switches on the test fixture to OFF.

D.9.11.2.5 Transmitted Power Test

The purpose of this test is to ensure the proper transmitted power. Refer to para. D.9.12.3. for troubleshooting procedures.

a. Disconnect the frequency counter from the directional coupler and connect the power meter IAW Figure D-22. Verify that the variable attenuator is at 0dB.

b. Set POWER and RF CONTROL switches on the test fixture to ON.

c. Measure the transmitted power on the power meter and record the result.

d. Verify the calculated transmitted power in dBm is 22.3±1.5dBm.

PT(dBm) = Pt(dBm) + KP

where:

PT(dBm) = Transmitted power in dBm

Pt(dBm) = 10xlog [Pt(mW/1mW]

Pt(mW) is the power measured in step c. above.

KP = Power calibration factor as indicated on the directional coupler of the test fixture.

Set RF CONTROL and POWER switches on the test fixture to OFF.

D.9.11.2.6 Receiver Sensitivity Test

The purpose of this test is to ensure the proper receiving sensitivity of the transceiver. Refer to para. D.9.12.4. for troubleshooting procedures.

a. Connect test setup IAW Figure D-23.

b. Function generator output function to 50KHz±1KHz, 8Vp-p±0.1V on output, square wave.

c. Connect oscilloscope CH1 to VIDEO(+) and CH2 to VIDEO(-) outputs on the test fixture.

d. Noise Level Test

1. Set the variable attenuator to 30dB±0.5dB attenuation.

2. Turn on the POWER and RF CONTROL switches on the test fixture. Set PIN SW DRV/INTERNAL SIM to PIN SW DRV position. Observe the noise level of the video

amplifier outputs on both channels of the oscilloscope. Verify that the signal is broad band noise and there are no oscillations.

3. Disconnect both channels of the oscilloscope from the test fixture.
4. Connect the RMS voltmeter input to the VIDEO[+] output on the test fixture. Record the RMS noise level in dBm.
5. Verify the noise level in mV: 100mV$_{rms}$ to 300mV$_{rms}$.
6. Connect the RMS voltmeter input to the VIDEO[-] output on the test fixture. Record the RMS noise level in dBm.
7. Verify the noise level in mV: 100mVrms to 300mVrms.

e. 50KHz Sensitivity Test. Record the test results under the 50KHz Sensitivity Test section on the test data sheet.

1. Disconnect the RMS voltmeter from the test fixture. Connect both channels of the oscilloscope to the VIDEO[+] and VIDEO[-] output on the test fixture.
2. Decrease the attenuation of the variable attenuator to 0dB. Verify the signal voltage level on CH1: VSAT[+] = 13Vp-p minimum.
3. Verify the signal voltage level on CH2: VSAT[-] = 13Vp-p minimum in reverse polarity to CH1.
4. Set the variable attenuator to 30dB.
5. Disconnect both channels of the oscilloscope from the test fixture.
6. Connect the RMS voltage input to the VIDEO[+] output on the test fixture.
7. Record the noise level in dBm.
8. Decrease the attenuation until the voltage level that is measured on the VIDEO[+] output is 30.3dB above the noise level measured in step (7). Record the RMS signal level in dBm.

NOTE

Adjust the phase shifter on the microwave test fixture to get the maximum signal on the RMS voltmeter.

9. Record the attenuation of the variable attenuator. Set the variable attenuator to 50dB.
10. Disconnect the RMS voltmeter from the VIDEO[+] output and connect it to VIDEO[-] output on the test fixture. Record the noise level in dbm.
11. Decrease the attenuation until the voltage level that is measured on the VIDEO[-] output is 30.3dB above the noise level measured in step D.9.11.2.6.e.6. Record the RMS signal level in dBm.
12. Record the attenuation of the variable attenuator.
13. Calculate the receiver sensitivity of VIDEO[+] output (see note): S[+] = -106dBm maximum.
14. Calculate the receiver sensitivity of Video[-] output (see note): S[-] = -106dBm maximum.

NOTE

Sensitivity calculation:

S = PT(dBm) - KS - 2A

where:

S - Receiver sensitivity in dBm
PT(dBm) - Transmitted power in dBm as was calculated in paragraph D.9.11.2.3.d.

KS - Sensitivity calibration factor as indicated on the directional coupler.

A - Attenuation of the variable attenuator as measured in step 9 (VIDEO[+]) and step 12 (VIDEO[-]).

f. 10 KHz Sensitivity Test. Record test results on the test data sheet under the 10KHz Sensitivity Test section.

1. Set the function generator to 10KHz±100Hz.
2. Repeat steps D.9.11.2.6.e.1 through D.9.11.2.6.e.14.

Set PIN SW DRV OUT, RF CONTROL and POWER switches on the test fixture to OFF. Deenergize all power supplies and other test equipment. Disconnect the SMA coaxial cable from the semi-rigid coaxial cable. Disconnect the transceiver unit from the test fixture.

Table D-14. Transceiver Assembly RF Section Test Data Sheet

CONVENTIONAL TRANSCEIVER_____SER NO. _____

Para.	Minimum Results	Actual Results	Maximum Results	Pass/Fail	Remarks
D.9.11.2.3.c.	40mA		100mA		
D.9.11.2.3.d.	ANT. Cable led is ON				
D.9.11.2.3.e.	ACCL. LED is OFF				
D.9.11.2.3.g.	ANT. Cable led is ON				
D.9.11.2.3.i.	500mA		900mA		
D.9.11.2.3.k.	8.7Vdc		9.9Vdc		
D.9.11.2.3.m.	2.4Vdc		3Vdc		
D.9.11.2.4e.	10524MHz		10526MHz		
D.9.11.2.5d.	20.8dBm		23.8dBm		
D.9.11.2.6.d.(1)	Broad Band Noise, No oscillation				
D.9.11.2.6.d.(5)	100mV		300mV		
D.9.11.2.6.d.(7)	100mV		300mV		
50KHz Sensitivity Test					
D.9.11.2.6.e.(2)	13Vp-p				
D.9.11.2.6.e.(3)	13Vp-p				
D.9.11.2.6.e.(7)	RMS noise level (dBm) =				
D.9.11.2.6.e.(8)	Signal level (dBm) =				
D.9.11.2.6.e.(9)	Variable attenuator attenuation =				
D.9.11.2.6.e.(10)	RMS noise level (dBm) =				
D.9.11.2.6.e.(11)	Signal level (dBm) =				
D.9.11.2.6.e.(12)	Variable attenuator attenuation =				
D.9.11.2.6.e.(13)			-106(dBm)		
D.9.11.2.6.e.(14)			-106(dBm)		
10KHz Sensitivity Test					
D.9.11.2.6.f.(2)	13Vp-p				
D.9.11.2.6.f.(3)	13Vp-p				
D.9.11.2.6.f.(7)	RMS noise level (dBm) =				
D.9.11.2.6.f.(8)	Signal level (dBm) =				
D.9.11.2.6.f.(9)	Variable attenuator attenuation =				
D.9.11.2.6.f.(10)	RMS noise level (dBm) =				
D.9.11.2.6.f.(11)	Signal level (dBm) =				
D.9.11.2.6.f.(12)	Variable attenuator attenuation =				
D.9.11.2.6.f.(13)			-106(dBm)		
D.9.11.2.6.f.(14)			-106(dBm)		

Date: _____
Inspected by: _____

D.9.11.3 Functional Test

D.9.11.3.1 Functional Test Procedures

The test setup provided in Figure D-27. shows the equipment used and cable hookup for the first procedural step.

D.9.11.3.2 Test Data Sheets

The test data sheets in Table D-15. are to be reproduced locally, as required, for recording the test results. The test data sheets must be completed each time a test section is performed. The completed test data sheets shall be retained and used as a troubleshooting aid.

D.9.11.3.3 Preparation for Test

a. Reinstall the RF cable IAW para. D.9.10.6.

b. Reassemble the UUT IAW para. D.9.10.7.

c. Energize power supply and adjust for +28±0.5Vdc. Deenergize power supply.

d. Energize and adjust DMM to measure high DC current. (10A range).

e. Before connecting the UUT to the test setup, verify that both power supplies are deenergized.

f. Connect the UUT to the test setup IAW Figure D-27.

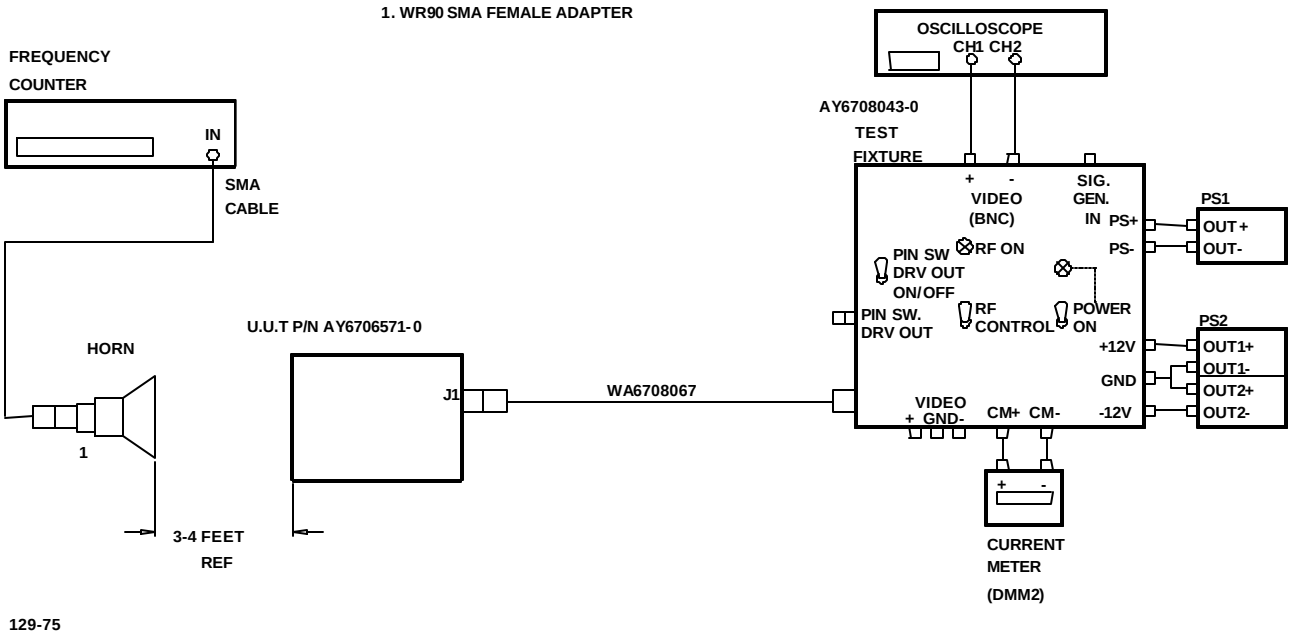

Figure D-27. Transceiver Assembly Functional Test Set-up

D.9.11.3.4 Test Procedure

a. Set POWER and RF CONTROL switches on the test fixture to OFF.

b. Energize both power supplies (PS1, PS2) and other test equipment. Turn on the POWER switch on the test fixture.

c. Verify stand-by current consumption on current meter DMM2 is 40mA to 100mA.

d. Set RF CONTROL switch on the test fixture to ON.

e. Verify operating current consumption on current meter DMM2 is 700±200mA.

f. After at least 30 seconds point the standard gain horn towards the transceiver unit radiating surface from a distance of 3-4 feet. Verify the transmitted frequency is 10525±1MHz and record it.

g. Observe the noise level of the video amplifier outputs on both channels of the oscilloscope. Verify that the signal is broad band noise and there are no oscillations.

NOTE

The transceiver should be oriented to minimize the interference of nearby electronic equipment or nearby objects reflections. Use microwave absorption material if required (or un-echoing chamber).

h. Verify the broadband noise level on CH1 is 2Vp-p maximum.

i. Verify the broadband noise level on CH2 is 2Vp-p maximum.

j. Place the DOPP.SIM. AY6706690-0 in front of the transceiver unit.

k. Verify that the signal on both channels of the oscilloscope is saturated. Record the signal voltage level on CH1: VSAT[+] = 13Vp-p minimum.

l. Record the signal voltage level on CH2: VSAT[-] = 13Vp-p minimum.

m. Turn off the RF CONTROL and POWER switches on the test fixture.

D.9.11.3.5 Deenergize all test equipment and disconnect the transceiver assy from the test fixture.

END OF TEST

Table D-15. Transceiver Assembly Functional Test Data Sheet

CONVENTIONAL TRANSCEIVER_____ SER NO. _____

Para.	Minimum Results	Actual Results	Maximum Results	Pass/Fail	Remarks
D.9.11.3.4.c.	40mA		100mA		
D.9.11.3.4.e.	500mA		900mA		
D.9.11.3.4.f.	10524MHz		10526MHz		
D.9.11.3.4.h.			2Vp-p		
	Broad band noise, No Oscillation				
D.9.11.3.4.i.			2Vp-p		
	Broad band noise, No Oscillation				
D.9.11.3.4.k.	13Vp-p				
	Saturated Signal				
D.9.11.3.4.l.	13Vp-p				
	Saturated Signal				

Date: _____

Tested by: _____

Inspected by: _____

D.9.12 Troubleshooting.

This paragraph contains the troubleshooting procedures for UUT failures detected during testing. It is arranged in the sequence of test steps, and provides information on additional test steps required for the malfunction isolation. Refer to Figure D-28. for the interconnection diagram of the UUT.

WARNING

Do not point the radiating surface towards any personnel. Do not bring eyes to close contact with the radiating surface. Use absorbing materials in front of the radiating surface whenever possible.

CAUTION

This equipment contains assemblies subject to damage by electrostatic discharge. Use approved grounding procedures before touching, removing or inserting printed wiring assemblies.

CAUTION

Exercise extra caution while handling the Transceiver and its electrical terminal. Use grounding strap on both hands.

CAUTION

Deenergize all external power supplies and other test equipment when disassembling or reassembling the UUT.

NOTE

In all troubleshooting procedures, when additional disassembly or reassembly is required, refer to the appropriate disassembly (D.9.5) or reassembly (D.9.10) procedure.

NOTE

After completion of troubleshooting and repair, perform the complete test procedure from the start.

D.9.12.1 Current Consumption and ON/OFF Control Failures

Failure in test procedure para. D.9.11.2.3..

D.9.12.1.1 Failure in Test Procedure Para. D.9.11.2.3..c.

a. Remove connector P1 from power supply module.
b. Check for 28Vdc between pins 9 and 3 of connector P1. If failed, check the connection to pins A and B of connector J1.
c. Check for short or disconnected circuit between pins 11 and 12 of connector P1. If failed, check the connection to Doppler amplifier CCA, terminals E1 and E2.
d. If not failed, test and troubleshoot power supply module IAW Section 3.9.

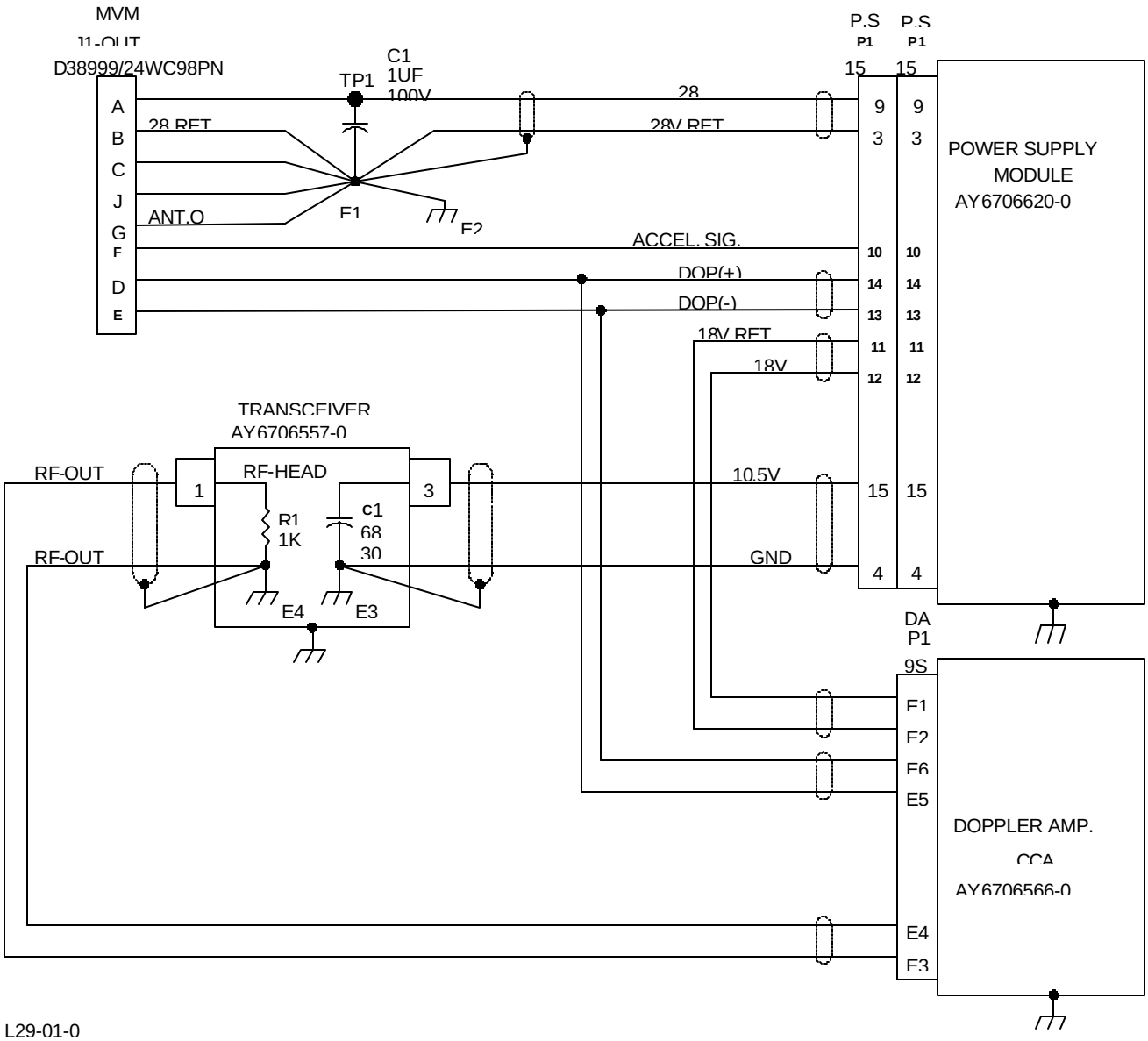

Figure D-28. Transceiver Assembly Interconnection Diagram

D.9.12.1.2 Failure in Test Procedure Para. D.9.11.2.3.d

Check that connector J1, pins G and B are properly connected to terminal E1.

D.9.12.1.3 Failure in Test Procedure Para. D.9.11.2.3.g

a. Remove connector P1 from power supply module.

b. Check for shorted or disconnected pin 10 of P1 to pin F of J1.

c. If not failed, test and troubleshoot power supply module IAW Section 3.9.

D.9.12.1.4 Failure in Test Procedure Para. D.9.11.2.3.i

a. Check for correct voltage (marked on the power supply module and the transceiver) on the transceiver oscillator input. If voltage correct, replace transceiver.

b. Remove connector P1 from power supply module.

c. Check for short or disconnected circuit on pins 15 and 4 of connector P1. Else, check the connection to oscillator input and E3 of transceiver.

d. Check for short or disconnected circuit on pins 13 and 14 of connector P1. Else, check the connection to pins D and E of J1.

e. If not failed, test and troubleshoot power supply module IAW Section 3.9.

D.9.12.1.5 Failure in Test Procedure Para. D.9.11.2.3.k., and D.9.11.2.3.m

a. Remove Doppler amplifier CCA cover.

b. Check for 18Vdc between terminals E1 and E2 of Doppler amplifier CCA. Check the connection to pins 12 and 11 of connector P1. Else, test and troubleshoot power supply module IAW Section 3.9.

c. Check for disconnected circuit on terminals E5 and E6 of Doppler amplifier CCA to pins D and E of J1. If not failed, test and troubleshoot Doppler amplifier CCA IAW Section 3.8.

D.9.12.2 Transmitted Frequency Failure. Failure in Test Procedure para. D.9.11.2.4

a. Repeat the test procedure.

b. If no frequency, or no adjusting possible, replace transceiver.

D.9.12.3 Transmitted Power Failure. Failure in Test Procedure para. D.9.11.2.5

a. Repeat the test procedure.

b. If no power, or power out of specified range, replace transceiver.

D.9.12.4 Receiver Sensitivity Failure

Failure in test procedure para. d.9.11.2.6..

D.9.12.4.1 Sensitivity Below Required Level

a. Set variable attenuator to 0dB attenuation. If signal on Doppler amplifier CCA outputs is saturated, 12Vp-p or more, replace transceiver.

b. If not failed, test and troubleshoot Doppler amplifier CCA IAW Section 3.8.

D.9.12.4.2 No Sensitivity

a. Set variable attenuator to 50dB.

b. If no output noise at all, test and troubleshoot Doppler amplifier CCA IAW Section 3.8.

c. If there is some output noise, replace transceiver.

D.9.12.4.3 Signal On One Output Only

D.9.12.4.4 Test and Troubleshoot Doppler Amplifier CCA IAW Section 3.8

D.9.13 Final Testing

D.9.13.1 Final Testing Procedures

The final testing is performed on a reassembled UUT. The test setup provided in Figure D-27., shows the equipment used and cable hookup for the first procedural step.

D.9.13.2 Test Data Sheets

The test data sheets in Table D-15., are to be reproduced locally, as required, for recording the test results. The test data sheets must be completed each time a test section is performed. The completed test data sheets shall be retained.

D.9.13.3 Preparation for Test

a. Reassemble the UUT IAW para. D.9.10.7.

b. Energize power supply and adjust for +28±0.5Vdc. Deenergize power supply.

c. Energize and adjust DMM to measure high DC current.

d. Before connecting the UUT to the test setup, verify that both power supplies are deenergized.

e. Connect the UUT to the test setup IAW Figure D-27.

D.9.13.4 Final Testing

Perform the final testing IAW para. D.9.11.3.4.

SECTION X.

MICROWAVE TEST EQUIPMENT, DESCRIPTION AND CALIBRATION

SECTION CONTENTS

		Page
D.10	MICROWAVE TEST EQUIPMENT, DESCRIPTION AND CALIBRATION	D-121
D.10.1	GENERAL.	D-121
D.10.2	OPERATION DESCRIPTION.	D-121
D.10.3	TEST EQUIPMENT CALIBRATION.	D-125

D.10 MICROWAVE TEST EQUIPMENT, DESCRIPTION AND CALIBRATION

D.10.1 General

D.10.1.1 Scope

This section describes the Microwave Test Equipment (MTE) that is used for testing of the M94 transceiver assembly P/N's AY6706571-0 and AY6706571-2. This MTE is also used for testing the M93 transceiver assembly P/N's AY6707292-0, AY6707292-1 and AY6707292-2 . For the M93 transceiver assembly, refer to TM9-1290-365-14&P, Appendix D, Section 9.

D.10.1.2 Purpose

The purpose of this section is to provide the calibration and maintenance procedures for the MTE.

D.10.2 Operation Description

D.10.2.1 Purpose

The purpose of the MTE is to demonstrate that the RF section of the transceiver assembly complies with the requirements.

D.10.2.2 Tested Requirements

The following performance requirements of the transceiver assembly are tested using the MTE:

a. Transmitted power

b. Transmitted frequency

c. Receiver sensitivity

D.10.2.3 Equipment Description

The MTE is composed of two types of equipment:

a. Standard Measurement Equipment (SME)

b. Microwave Measurement Equipment (MME)

D.10.2.4 Standard Measurement Equipment

Unless otherwise specified, the SME listed in Table D-16. is used for testing the transceiver assembly. Each standard measurement equipment can be replaced by equipment equivalent to the one listed with same or better performance.

Table D-16. Standard Measurement Equipment

Nomenclature	Part/Spec. No.	Figure
Microwave Frequency Counter	ElP Model 535	C-27, 26
Function Generator	Wavetek, Model 178	C-27, 41
Oscilloscope	Hewlett Packard, Model 1070B	C-27, 44
Power Supply, DC (0-40 V, 5 A)	Lambda, LLS-9040	C-27, 24
Power Supply, DC (0-40 V, 1A) 2 each	Lambda, LLS-5040	C-27, 23
Coaxial Cable, BNC, Male-To-Male, 50 Ω (3)	Local Manufacture	N/A
RMS Voltmeter	Hewlett-Packard, Model 3400A	C-27, 60
Power Meter	Hewlett-Packard, Model 432B	C-27, 61
Thermistor Mount	Hewlett-Packard, Model 8478B	C-27, 62

D.10.2.4.1 Microwave Measurement Equipment

D.10.2.4.1.1 Connection

The microwave measurement equipment (MME) is listed in Table D-17. and should be connected as described in Figure D-29. prior to testing of the transceiver assembly. It should be calibrated for overall insertion loss for power and sensitivity measurements.

Table D-17. Microwave Measurement Equipment

Nomenclature	Part/Spec. No.	Figure
Coaxial Cable, SMA, Male-To-Male, 50 Ω (3)	Local Manufacture	N/A
Coaxial Cable, SMC Female/BNC Male, 50 Ω	Local Manufacture	N/A
WR90/SMA Female Adapter (4)	Midwest Microwave, 3625	C-27, 59
Pin Switch	General Microwave, Model 9114	C-27, 59
Phase Shifter	Midisco, Model MDC 1089-1	C-27, 59
Fixed Coaxial Attenuator, 20dB	Weinschel, Model 4M	C-27, 59
Variable Wave guide Attenuator	Hewlett-Packard, Model X382A	C-27, 59
Wave guide Directional Coupler	Hewlett-Packard, Model X752D	C-27, 59
Termination, 50 Ω	Midwest Microwave, 2444M	C-27, 59
SMA Female/SMA Female Adapter	Midwest Microwave, 2595	C-27, 59
N-Type Female/SMA Male Adapter	Midwest Microwave, 2682	C-27, 59

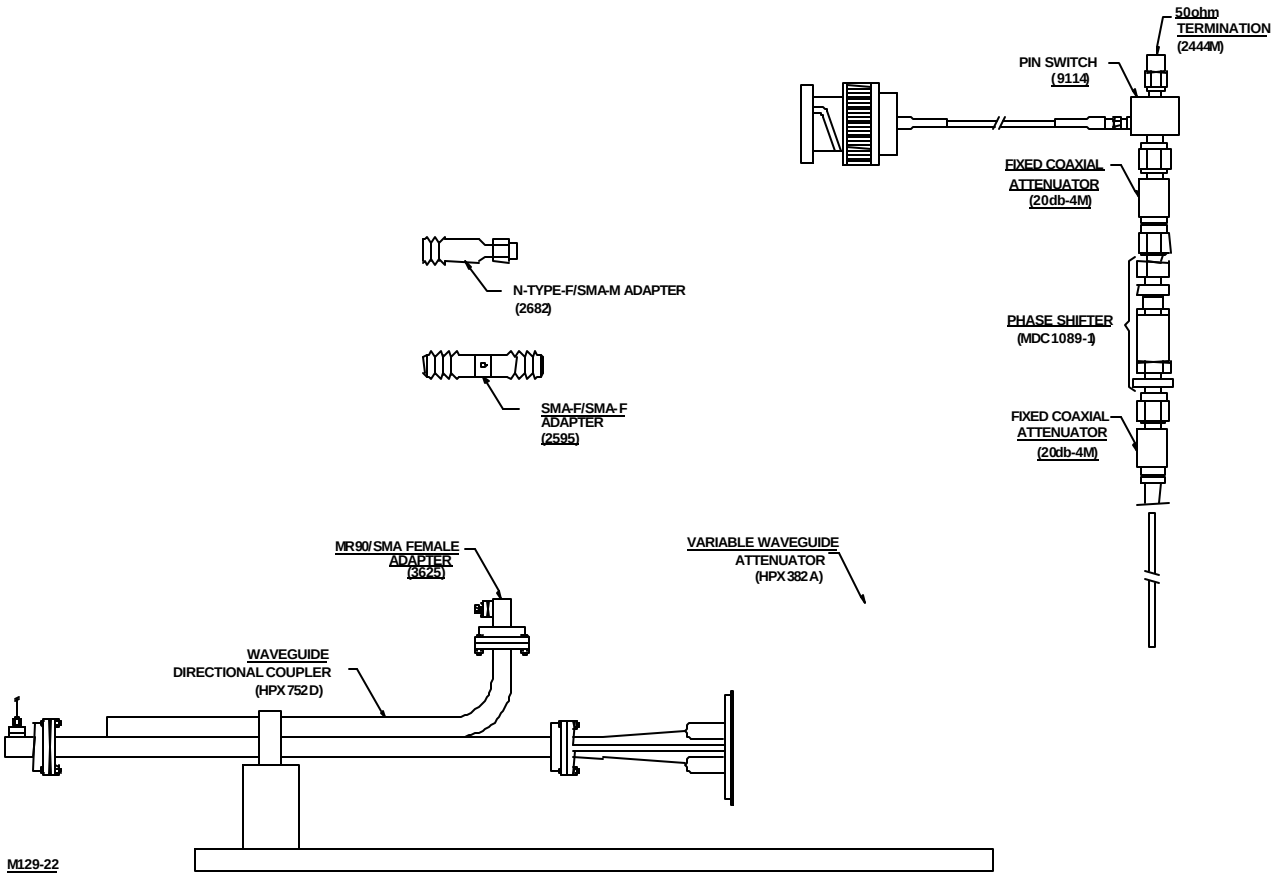

Figure D-29. Microwave Measurement Equipment Connection

D.10.2.5 Sensitivity Measurements Theory

The transceiver assembly transmits a low power X-band continuous wave signal. The transmitted signal strikes the outgoing projectile in flight and the reflected RF energy is received by the antenna. The reflected signal is different from the transmitted due to the Doppler effect. The antenna unit detects the difference between the transmitted and received signals, which is directly relative to the projectile velocity.

In order to achieve the simulation of the outgoing projectile, the transmitted signal is reflected and modulated so that the received frequency is within the velocity measuring range of the transceiver assembly. This is obtained by the modulation of a PIN switch in the microwave section at the appropriate frequency. The PIN switch is modulated by a square wave that causes it to switch from off to on, and vice versa. When the PIN switch is off, the transmitted signal is reflected back to the antenna. When the PIN switch is on, the signal is absorbed by the dummy load. Because of the square wave modulation, the reflected signal contains several spectral components. The first spectral component corresponds to the Doppler shifted frequency.

The first spectral component, power, is $1/\Pi^2$ (-9.94dB) of the transmitted power, in accordance with Fourier Transform theory.

Also, as a result of the ON/OFF chopping of the signal and the absorption by the dummy load, only 1/2 (-3dB) of the transmitted power is reflected.

D.10.2.6 Detailed Description

D.10.2.6.1 Transmitted Frequency and Power Tests

The transmitted frequency and power tests are performed using a directional coupler and a variable attenuator. These two components are connected together during the tests because they are wave guide components and must be hardware connected. This setup has wave guide-to-SMA adapters to provide easy connection to the unit under test (UUT) and to other test equipment.

When the frequency counter is connected to the coupling output of the directional coupler, the transmitted frequency is measured.

When the power meter is connected to the coupling output, the transmitted power is measured. The power which enters the power meter is attenuated by the coupling attenuation of the directional coupler. To get the real transmitting power, the coupling attenuation is be added to the power measured by the power meter. The equation for the transmitted power calculation is:

PT = Pt + Kp

where:

PT = transmitted power in dBm

Pt = measured power in dBm

Kp = coupling attenuation factor in dB.

D.10.2.6.2 Receiver Sensitivity

The microwave section (including all adapters and SMA cables) is installed permanently and is calibrated for its overall insertion loss. The overall insertion loss is due to insertion losses of the components and reflection losses between components.

The receiver sensitivity is defined as the received (reflected) power required to achieve a signal at the output of the transceiver which is 3dB greater than the noise level at the output when no signal is received. The equation for the receiver sensitivity calculation is:

$S = PT - Ks - 2A$

where:

S = receiver sensitivity in dBm

PT = transmitted power in dBm

Ks = overall insertion loss factor in dB

A = attenuation of the variable attenuator in dB

The receiver sensitivity test is performed in 5 steps:

a. The output signal is adjusted to maximum reflected signal by the phase shifter.

b. The transmitted power is measured on the power meter.

c. The output noise level is measured on the RMS voltmeter.

d. The reflected signal is adjusted, using the variable attenuator, to get an output signal which is 3dB greater than the noise level.

e. The receiver sensitivity is calculated using the above equation.

NOTE

The attenuation of the variable attenuator is multiplied by 2 because the signal is attenuated twice, once when it is transmitted forwards and once again when it is reflected backwards.

The transceiver is connected to the directional coupler. The transmitted power is measured through the coupling output as described in paragraph D.10.2.5.1.. The transmitted signal passes towards the modulated PIN switch where it is reflected or absorbed by the dummy load (see paragraph D.10.2.4.). The PIN switch is modulated by a frequency in the measurement range. The variable attenuator allows adjustment of the reflected signal to a desired level. The phase shifter is used to adjust the reflected signal phase to the transmitted signal phase. The 40dB fixed attenuator allows operating at the mid-scale of the variable attenuator, and not at the scale's edge. The attenuation of the fixed attenuator is included in the overall insertion loss factor. The output signal is transferred to the oscilloscope and RMS voltmeter for measurement.

D.10.3 Test Equipment Calibration

D.10.3.1 SME Calibration

The SME is calibrated in accordance with MIL-STD-45662.

D.10.3.2 MME Special Calibration

D.10.3.2.1 Microwave Section Calibration Procedures.

The microwave section of the measurement equipment for receiver sensitivity is calibrated for overall insertion loss. Refer to Figure D-30. for a schematic of calibration connection.

D.10.3.2.2 Calibration Data Sheets

The calibration data sheets in Table D-18., are to be reproduced locally, as required, for recording the calibration results. The calibration data sheets must be completed each time a calibration is performed. The completed calibration data sheets shall be retained and used as a troubleshooting aid.

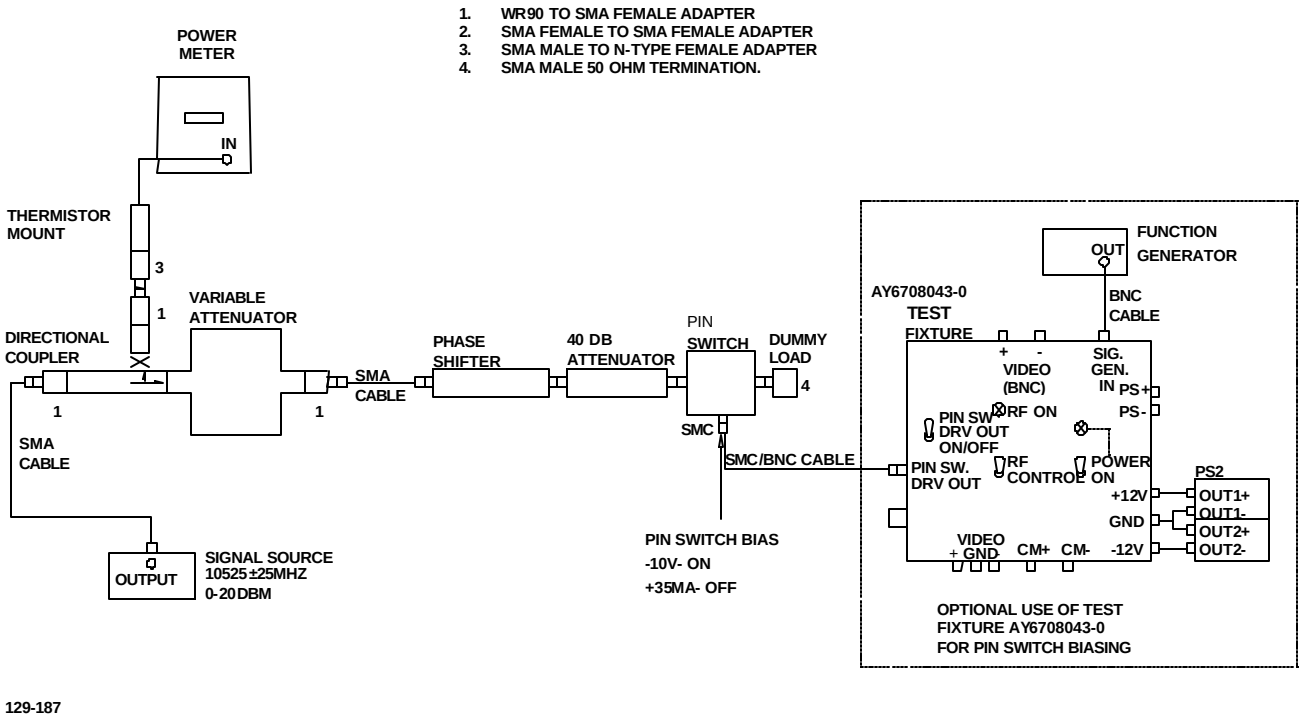

129-187

Figure D-30. Microwave Measurement Equipment Calibration Schematic

D.10.3.2.3 Special Calibration Requirements

The calibration of the microwave test equipment is performed in 3 steps:

a. Insertion loss without the PIN switch.

b. Return loss of the PIN switch.

c. Calculation of overall insertion loss.

D.10.3.2.4 Insertion Loss Without PIN Switch

The calibration of the MME setup is performed in the following way:

a. The PIN switch and dummy load are disconnected from the test setup.

b. A power meter is connected to the coupling output of the directional coupler and to the output of the 20dB fixed attenuator.

c. A signal source of 0 to 20dBm power (Pi) and frequency of 10525±25MHz is inserted through the SMA female/female adapter.

d. The variable attenuator is set to 0dB attenuation.

e. The phase shifter is adjusted for maximum power on the fixed attenuators output.

f. The power on the fixed attenuator output and the coupling output are recorded.

g. Pc(dBm) = Coupling output

h. Pa(dBm) = Fixed attenuator output

i. The insertion loss for both outputs is calculated:

Kp = Pi - Pc (coupling attenuation factor in dB)

Ka = Pi - Pa (insertion loss at fixed attenuator output in dB)

Pi = input power from the signal source in dBm

D.10.3.2.5 Return Loss of the PIN Switch

The PIN switch is tested for its return loss (RL) when the switch is off. The off position is defined while the PIN SW is set to isolate the input from the output port and reflect the power to the input port. The PIN switch is biased in accordance with its manufacturer's requirements during tests.

NOTE

For this test, the PIN SW. output of the test fixture AY6708043-0 can be used to bias the tested PIN switch. Refer to Figure D-30.

D.10.3.2.6 Calculation of Overall Insertion Loss

The overall insertion loss of the microwave test equipment setup is calculated as follows:

Ks = 2 x Ka + RL + 3dB + 9.94dB

where:

Ks = overall insertion loss factor in dB

2 = multiplier for a signal traveling both ways

Ka = insertion loss of the microwave test equipment setup as was previously measured

RL = return loss of the PIN switch in dB

3dB = correction for -3dB power reflection as a result of on/off chopping of the signal by the PIN switch.

9.94dB = correction for -9.94dB in reflected power as a result of the first spectral component.

D.10.3.2.7 Factor Marking

The coupling attenuation factor (Kp) and the overall insertion loss factor (Ks) are marked using a sticker on the directional coupler as follows:

Kp = XX.X dB

Ks = XX.X dB

XX.X = the result achieved after calculations.

End of Calibration

Table D-18. MME Calibration Data Sheet

Para.	Description	Measured/Calculated Result
D.10.3.2.4. D.10.3.2.4..c. D.10.3.2.4..f. D.10.3.2.4..g.	Insertion Loss Pi (dBm) Pi (MHz) Pc (dBm) Pa (dBm) Kp (dBm) Ka (dBm)	
D.10.3.2.5.	Return Loss RL (dB)	
D.10.3.2.6.	Overall Insertion Loss Ks (dB)	
D.10.3.2.7.	Factor Marking Mark Kp and Ks	

Tested by: _____
Inspected by: _____
Date: _____

APPENDIX E
GLOSSARY

APPENDIX CONTENTS

Page

E.1 ABBREVIATIONS AND ACRONYMS. E-1
E.2 SPECIAL TERMS. E-6

E.1 ABBREVIATIONS AND ACRONYMS.

The following abbreviations and acronyms are used in this manual:

Acronym	Definition
ADDR	Address
AFA MVR	Advanced Field Artillery Muzzle Velocity Radar
AFCS	Automatic Fire Control System
Ah	Ampere Hour
ANT	Antenna
AUX	Auxiliary
AVIM	Avionics Intermediate Maintenance
AVUM	Avionics Unit Maintenance
BCD	Binary Coded Decimal
BIT	Built-in Test
BNC	Bayonet-Coupled
BOI	Basis of Issue
C	Celsius
CARC	Chemical Agent Resisting Coating
CCA	Circuit Card Assembly
CKT	Circuit
CLR	Clear

Acronym	Definition
CMD	Command
CMOS	Complementary Metal Oxide Semiconductor
CNT	Count
COMM	Communication
CPC	Corrosion Prevention and Control
CPDU	Control Processor and Display Unit
CS	Chip Select
dB	Decibel
DIFF	Differential
DMA	Data Memory Address
DMD	Data Memory Data
DMM	Digital Multimeter
DMWR	Depot Maintenance Work Requirement
DOPP	Doppler
DS	Doppler Simulator
DS	Direct Support
DSP	Digital Signal Processor
EEPROM	Electrically Erasable Programmable Read-Only Memory
EIR	Equipment Improvement Recommendation
EL	Electro-Luminescence
EMI	Electromagnetic Interference
ENT	Enter
EPROM	Erasable Programmable Read-Only Memory
ESD	Electrostatic Discharge
ESDS	Electrostatic Discharge Sensitive
EXT	External
FDOPP	Doppler Frequency
FFTA	Fast Fourier Transform Algorithm
FSC	Federal Supply Class
ft lb	Foot Pound
GEN	Generator

Acronym	Definition
GND	Ground
gr	Gram
GS	General Support
Hz	Hertz (cycles per second)
IAW	In Accordance With
in.	Inch
in. lb	Inch Pound
I/O	Input/Output
K	Kilobyte
KBD	Keyboard
Kg	Kilogram
kHz	Kilohertz
LCD	Liquid Crystal Display
LED	Light Emitting Diode
LTR	Letter
MAC	Maintenance Allocation Chart
max	Maximum
MCA	Muzzle Velocity System Communication Adapter
MEAS	Measure
MEK	Methylethylketone
MHz	Megahertz
MIL-STD	Military-Standard
MIN	Minimum
ms	Millisecond
m/sec	Meters Per Second
MSN	Mission
MSR	Measure
MTOE	Modified Table of Organization and Equipment
MV	Muzzle Velocity
MVM	Muzzle Velocity Management
MVP	Muzzle Velocity Processor

Acronym	Definition
MVS	Muzzle Velocity System
MVV	Muzzle Velocity Variation
mW	Milliwatt
NBC	Nuclear, Biological, and Chemical
NICAD	Nickel-Cadmium
NIIN	National Item Identification Number
N. m	Newton Meter
nsec	Nanosecond
para.	Paragraph
PG+	Page Up
PG-	Page Down
PMA	Program Memory Address
PMD	Program Memory Data
PMDA	Program Memory Data Address
POST	Power-on Self Test
PS	Power Supply
p-p	Peak-to-Peak
PWB	Printed Wiring Board
PWM	Pulse Width Modulation
PWR	Power
RAM	Random Access Memory
REG	Regulator
RET	Return
RF	Radio Frequency
RPSTL	Repair Parts and Special Tools List
RFI	Radio Frequency Interference
RXD	Decimal Data
SIG	Signal
SOP	Standard Operating Procedure
SRA	Specialized Repair Activity
SRU	Shop Replaceable Unit

Acronym	Definition
SYNTH	Synthetic
TEMP	Temperature
TFT	Tabular Firing Table
TM	Technical Manual
TMDE	Test, Measurement, and Diagnostic Equipment
TRIG	Trigger
TST	Test
TU	Transceiver Unit
TXD	Transmitted Data
UOC	Usable on Code
UUT	Unit Under Test
V	Volt
VAC	Volts – Alternating Current
VBAT	Battery Voltage
VDC	Volts – Direct Current
VIN	Voltage In
W	Watt

E.2 SPECIAL TERMS.

The following special terms are used in this manual:

Term	Definition
Debouching	A delay built into computer software to prevent the bouncing of keys, due to worn-out springs, from generating false inputs from the keyboard.
Doppler Effect	The change in the observed frequency of an electro-magnetic wave due to relative motion of source and observer.
Doppler Radar	A radar that makes use of the Doppler shift of an echo due to relative motion of target and radar to differentiate between fixed and moving targets and measure target velocities.
Microstrip	A strip transmission line that consists basically of a thin-film strip in intimate contact with one side of a flat dielectric substrate, with a similar thin-film ground-plane conductor on the other side of the substrate.
RS-232	A standard developed by the Electronic Industries Association that governs the interface between data processing and data communication equipment. Used to connect microcomputers to peripheral devices.

APPENDIX F
EXPENDABLE AND DURABLE ITEMS LIST

SECTION I.
INTRODUCTION

APPENDIX CONTENTS

Page

F.1 SCOPE F-1
F.2 EXPLANATION OF COLUMNS F-1

EXPENDABLE AND DURABLE ITEMS LIST

F.1 SCOPE

This appendix lists expendable and durable items you will need to operate and maintain the M94 MVS. This listing is for information only and is not authority to requisition the listed items. These items are authorized to you by CTA 50-790, Expendable/Durable Items (except medical, class V repair parts, and heraldic items), or CTA 8-100, Army Medical Department Expendable/Durable Items.

F.2 EXPLANATION OF COLUMNS

One. Column 1. Item Number.
This number is assigned to the entry in the listing and is referenced in the narrative instructions to identify the item (e.g. Use cleaning compound, item 5, appendix F").

Two. Column 2. Level. This column identifies the lowest level of maintenance that requires the item.

Three. Column 3. National Stock Number. This is the National stock number assigned to the item which can use to requisition it.

Four. Column 4. Item Name, Description, Contractor and Government Entity Code (CAGEC), and Part Number. This provides the other information you need to identify the item.

Five. Column 5. Unit of Measure. This code shows the physical measurement or count of an item, such as gallon, dozen, gross, etc.

(1) Item Number	(2) Level	(3) National Stock Number	(4) Item Name, Description CAGE Code, & Part Number	(5) (U/M)
1	O	6810-00-194-9477	ACETONE (81348) OA51	PT
2	O	8040-01-147-9957	ADHESIVE (06090) S1125	GR
3	O	8040-00-947-5483	ADHESIVE (06090) S1184	OZ
4	F	6810-01-136-7012	ALCOHOL, ISOPROPYL 1 gal bottle, grade A(81348) TT-I-735A	GL
5	O	6135-01-036-3495	BATTERY (80058) BA-5590/U	UNIT
6	F	7920-00-514-2417	BRUSH, ACID (81348) H-B-643	GR
7	O	7920-00-140-0869	CLOTH, LINT-FREE (03950) 8722-0088	BX
8	F	3439-00-220-3827	FLUX, SOLDERING Type RMA (81349) MIL-F-14256	PT
9	O	5970-00-090-9184	INSULATION COMPOUND, ELECTRICAL Type 1B31 (81349) MIL-I-46058	PT
10	F	7530-01-119-2563	LABEL (16956) 43-143	BX
11	O	5970-00-001-9356	LACING TAPE (81349) MIL-T-43435-B3/BLK	RO
12	O	8030-00-555-2879	LOCKING COMPOUND Grade E, 250 cc bottle (81349) MIL-S-22473	CC
13	O	9525-01-047-6454	LOCKWIRE (96906) NASM20995AB20	LB
14	O	6810-00-264-8983	METHYLETHYLKETONE (81346) ASTM-D-740	OZ
15	O	5315-00-234-1864	PIN, COTTER (96906) MS24665-302	HD
16	O	8030-00-081-2330	SEALING COMPOUND (05972) 83-31	OZ
17	O	8030-00-082-2508	PRIMER, SEALING COMPOUND (05972) 747-55	OZ
18	O	7920-00-205-1711	RAG, WIPING 50 lb (22.68 kg) bale (58536)	LB
19	O	8040-00-144-9774	SEALANT, ADHESIVE 12 oz (340.2 gr) cartridge (81349) MIL-A-46146	OZ
20	O	8030-00-081-2340	SEALING COMPOUND Grade AA (81349) MIL-S-22473	CC
21	O	8030-00-081-2330	SEALING COMPOUND (05972) 83-31	OZ
22	O	6850-00-109-4362	SILICONE COMPOUND (81349) MIL-C-47113	PT
23	O	3439-01-046-1471	SOLDER, TIN ALLOY QQ-S-571 TYPE SN63WRMAP3 (81348)	LB
24	F	6810-01-136-7012	ALCOHOL, ISOPROPYL 1 gal bottle, grade A(81348) TT-I-735A	GL
25	O	5970-01-331-4831	TUBING, INSULATING (81349) M22129-22-N	EA
26	O	5310-00-933-8119	WASHER, LOCK (96906) MS35338-137	HD
27	O	6145-00-052-2581	WIRE (81349) MIL-W-16878/4-22-9	FT
28	O	6145-00-838-9444	WIRE, BUS (81349) QQ-W-343/S-26-S1T	LB

(1) Item Number	(2) Level	(3) National Stock Number	(4) Item Name, Description CAGE Code, & Part Number	(5) (U/M)
29	O	6145-00-160-4775	WIRE, BUS (81349) QQ-W-343/S-22-S1T	LB
30	O	6145-01-194-505	WIRE: MPD-1506EE18U9	FT
31	O	5970-01-390-0997	SLEEVE, HEAT SHRINK (81349) M23053/5-107-9	FT
32	O	5970-01-351-6799	SLEEVE, HEAT SHRINK M23053/18-202-C (81349)	FT
33	O	8105-01-124-2645	BAG, ANTISTATIC (10001) 3271576	UNIT
34	O	8040-01-010-8758	ADHESIVE, CLEAR (71984) RTV732	OZ
35	O	8040-01-160-6741	PAINT, CARC, MIL-C-46168 COLOR 383 IAW FED-STD-595	PT
36	O	8040-01-160-9489	ADHESIVE (18565) 1038	OZ
37	O	8040-01-188-5038	PRIMER (18565) 1086	PT
38	O	5970-01-328-4827	TAPE INSULATION GLASS CLOTH 0.5" WIDE MIL-I-19166-0.50X .010 (81349)	EA

THIS PAGE INTENTIONALLY LEFT BLANK

APPENDIX G
U. S. MARINE CORPS MODIFICATION INSTRUCTION INSTALLING THE M90/GDU POWER CABLE MODIFICATION KIT MUZZLE VELOCITY SYSTEM (MVS)

APPENDIX CONTENTS

		Page
G.1	PURPOSE	G-1
G.2	TIME COMPLIANCE	G-1
G.3	INFORMATION	G-1
G.4	MAJOR ITEM AFFECTED	G-2
G.5	COMPONENT AFFECTED	G-2
G.6	MATERIAL AFFECTED	G-2
G.7	SUPPLY ACTION	G-2
G.8	SKILL AND TIME REQUIRED	G-2
G.9	SPECIAL TOOLS	G-3
G.10	MODIFICATION PROCEDURE	G-3
G.11	INSPECTION	G-5
G.12	RECORDING AND REPORTING THE MODIFICATION	G-5

G.1 To provide instructions to modify the M90/GDU Power Cable, for use with the Muzzle Velocity System M94 (MVS).

G.2 TIME COMPLIANCE

The action required by this Modification Instruction (MI) shall be accomplished within three years of publication of this MI.

G.3 INFORMATION

This modification will lower the initial fielding cost, by allowing the user to modify existing serviceable M90/GDU Power Cables. This Modification to the existing M-90/GDU Cable is a temporary fix. Drawings for a new MVS/GDU Power Cable are being created and will be cataloged and a National Stock Number requested for Marine Corps use.

G.4 MAJOR ITEM AFFECTED

Description	NSN	TAM No.	I.D. No.
MUZZLE VELOCITY SYSTEM, M-94	6680-01-M14-1082	E1145	09814A

G.5 COMPONENT AFFECTED

Description	NSN	PN
CABLE ASSEMBLY	6150-01-341-5300	12255-6231174

G.6 MATERIAL AFFECTED

a. Material Required

Item	Description	NSN	PN	QTY.
KIT,	**Modification consisting of:**	**N/A**	**95004A0000**	1
(1)	CONNECTOR, Plug, Electrical	5935-01-358-0836	D38999/26WC4SN	1
(2)	CLAMP, Cable, Electrical	5935-01-360-8751	M85049/38-13W	1
(3)	COVER, Electrical	5935-01-165-8819	10-552944-139	1
(4)	SLEEVING, Insulation	5870-00-812-2969	M23053/5-104-0	2
(5)	CABLE MARKER “CPDU J1"	N/A	N/A	1
(6)	CABLE MARKER “CABLE, MVS POWER PIN 95004A1000"	N/A	N/A	1

b. Material Discarded

Dispose of discarded material in accordance with current Marine Corps directives.

Item	Description	NSN	PN	QTY.
(1)	CONNECTOR, Plug, Electrical	5935-01-092-1035	MS3116E14-5S	1
(2)	CLAMP, Cable Electrical	5935-01-163-3224	M85049/38-13W	1
(3)	COVER, Electrical	5935-00-905-2071	MS3180-14C	1
(4)	SLEEVING, Insulation	5870-00-812-2969	M23053/5-104-0	2
(5)	CABLE MARKER “M-90"	N/A	N/A	1

G.7 SUPPLY ACTION

Units will not be required to requisition Modification Kits. Kits will be force-fed to individual units during the MVS hand-off via the Marine Corps Fielding Program. The subject MI Kits will not be cataloged for an National Stock Number, individual parts can be ordered thru normal supply, until action cited in paragraph 2 above is completed. All users, supported of Marine Corps Unique Cable will be notified when catalogue action is completed, of the NSN assigned. Action will be taken at that time to update supporting Publications.

G.8 SKILL AND TIME REQUIRED

Artillery Electronic System Repairer (MOS 2885), 1.0 hours.

G.9 SPECIAL TOOLS

The following tool is helpful, but not mandatory, for crimping each connector socket to its conductor.

Item	Description	NSN	PN	QTY.
(1)	CRIMPING TOOL Astro Tool Corp, Beaverton, OR. CAGE 58164	5120-00-165-3910	M22520/2-01 (Astro PIN 615717)	1

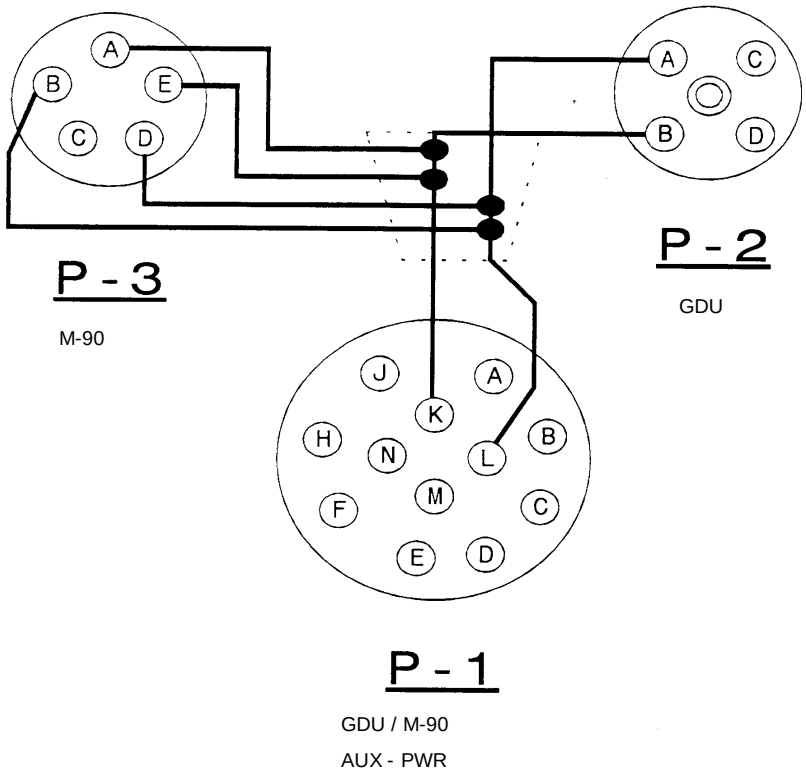

Figure G-1. AUX-PWR Connection

G.10 MODIFICATION PROCEDURE

a. Disassembly (Figure G-1 Provides Schematic Information)

1. Locate connector P-3. It is on the cable leg marked “M-90".
2. Remove and discard the two clamp screws, cover, and two clamp retainers.
3. Unscrew the clamp body from the connector. Slide it away from the connector so there is room to work.

NOTE

Before continuing with the procedure, use an ohmmeter or a continuity checker and Figure 1 to ensure cable integrity. With the exception of connector P-3, which is being replaced, repair cable defects as necessary.

NOTE

Connector P-3, socket C is empty. It has no conductor attached to it.

4. Look at where the conductors enter the connector. If the insulation for each conductor is a different color, record the color of the conductor connected to each connector socket. For example: red conductor, socket A; green conductor, socket B, and so on. If the insulation is not a different color for each conductor, mark the socket location on its respective conductor. Use a small piece of masking tape attached to the conductor.
5. Cut off the connector and discard. Remove and discard the clamp body.

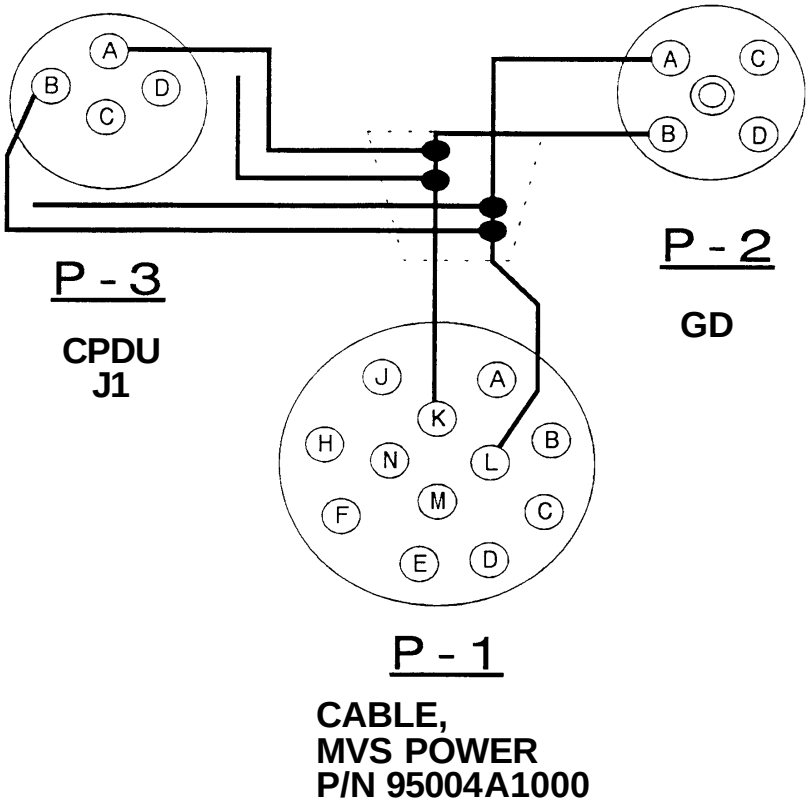

Figure G-2. MVS Power Connection

b. Assembly (Figure G-2 Provides Schematic Information)

1. Slide the new clamp body on the cable, ears first.
2. Trim the cable outer cover to length.
3. Cut the conductors that went to connector sockets D and E. They will not be used. Cut conductors D and E so they extend approximately 1/4-inch past the outer cable cover. Cut two pieces of sleeving, insulation, NSN 5870-00-812-2969 approximately 1/2- inch long. Place the cut pieces of sleeving over conductors D and E. Using a heat source, shrink the sleeving until it is tight. Trim the excess sleeving to preclude any bare wire from showing.

NOTE

Connector, Plug, Electrical NSN 5935-01-358-0836 contains the connector body and a parts kit. The kit contains five each sockets and an insertion/extraction tool.

NOTE

Look closely at the sockets. The end with the stripes is crimped on the conductor. The silver end goes in the connector.

4. Trim conductors A and B to length. Strip conductor insulation so as to get a proper fit in the sockets. Attach a socket to the each bare wire. Use the recommended crimping pliers or the equivalent to crimp the sockets to the conductor.
5. Using the insertion tool, insert the socket with conductor A in connector hole labeled A. Insert the socket with conductor B in connector hole labeled B. Ensure each socket “snaps" into its respective hole.
6. Insert empty sockets in connector holes labeled C and D. There are no conductors attached to these sockets.
7. Screw the clamp on the connector. Adjust the conductors as necessary to prevent binding, or cutting the conductor insulation.
8. Attach the clamp retainers and the cover using the two screws provided.
9. Remove and discard the cable marker label “M-90." Install the new cable marker label “CPDU, J-1" in its place.
10. Go to cable plug P-1. Remove and discard cable marker label “GDU/M-90 AUX PWR." Install the new cable marker label “CABLE, MVS POWER P/N 95004A1000."

CAUTION

Incorrect wiring may apply vehicle voltage (+28.5 Volts DC) to the voltage return line in the EMI filter. This will cause significant electrical damage to the EMI filter specifically, and to the MVS in general. Electrical damage will render the system Non-Mission Capable (NMC).

G.11 INSPECTION

Using Figure G-2 and an ohmmeter or continuity tester, ensure point to point continuity. Correct as necessary.

G.12 RECORDING AND REPORTING THE MODIFICATION

Recording and reporting this modification is not required.

THIS PAGE INTENTIONALLY LEFT BLANK

APPENDIX H

MCA MANUAL AND OVERHAUL INSTRUCTIONS

APPENDIX CONTENT

Page

FOREWORD....H-2
CHAPTER 1 GENERAL INFORMATION AND SYSTEM DESCRIPTION....H-4
SECTION I GENERAL INFORMATION....H-7
SECTION II EQUIPMENT DESCRIPTION....H-9
SECTION III COMPONENT DESCRIPTION....H-12
CHAPTER 2 MAINTENANCE INSTRUCTIONS....H-18
SECTION I MAINTENANCE INSTRUCTIONS....H-20
SECTION II MCA ASSEMBLY....H-23
SECTION III EMI FILTER ASSEMBLY, P/N AY20412144....H-32
SECTION IV SWITCH ASSEMBLY, P/N AY20412557....H-39
SECTION V MCA - MVS CABLE, P/N WA20410634....H-43
SECTION VI MCA CCA CABLE, P/N WA20412122....H-48
CHAPTER 3 DATA BASE EDITOR....H-53
CHAPTER 4 REPROGRAMMING....H-66
CHAPTER 5 PREPARATION FOR SHIPMENT AND STORAGE....H-70
CHAPTER 6 OVERHAUL PROCEDURES....H-73
SECTION I GENERAL....H-73
SECTION II CPU, CIRCUIT CARD ASSEMBLY....H-74
CHAPTER 7 GLOSSARY....H-86
CHAPTER 8 FOLDOUT DIAGRAMS....H-88

FOREWORD

		Page
H.1	FOREWORD	H-2
H.1.1	PURPOSE OF THIS MANUAL	H-2
H.1.2	USE OF THIS MANUAL	H-2
H.1.3	RELATED PUBLICATIONS	H-3
H.1.4	COMMON TOOLS AND EQUIPMENT	H-3
H.1.5	SPECIAL TOOLS AND SUPPORT EQUIPMENT	H-3
H.1.6	TEST, MEASUREMENT AND DIAGNOSTIC EQUIPMENT (TMDE)	H-3
H.1.7	REPAIR PARTS	H-3

H.1 FOREWORD

H.1.1 Purpose of This Manual

This Appendix provides operating and maintenance instructions for the MVS Communication Adapter (MCA). To enable personnel to perform proper operating and maintains.

Content of this Manual

This manual contains the following Chapters:

Chapter 1 - General Information and System Description
Chapter 2 - Maintenance Instructions
Chapter 3 - Database Editor
Chapter 4 - Reprogramming
Chapter 5 - preparations for Shipment and Storage
Chapter 6 - Overhaul Procedures
Chapter 7 - Glossary
Chapter 8 - Foldout Diagrams

H.1.2 Use of This Manual

The appendix content indicates Chapter, section, paragraph title and page number to facilitate location of information. Illustrations, diagrams and Tables are located throughout the manual to supplement the text material. The list of illustrations and list of Tables indicates the number, title and page number.

A glossary of non-standard abbreviations added for the user conveniences.

H.1.3 Related Publications

For the list of related publications, refer to Appendix A.

H.1.4 Common Tools and Equipment

For authorized common tools and equipment, refer to the Modified Table of Organization and Equipment (MTOE), CTA50-970 or CTA8-100, as applicable to your unit.

H.1.5 Special Tools and Support Equipment

There are no special tools required for the repair of the MCA.

H.1.6 Test, Measurement and Diagnostic Equipment (TMDE)

TMDE required for the repair of the MCA are listed in the maintenance instructions Chapter H.2

H.1.7 Repair Parts

Repair parts are listed and illustrated in Appendix C of this manual.

CHAPTER 1
ENERAL INFORMATION AND SYSTEM DESCRIPTION

CHAPTER CONTENT

Page

FOREWORD H-2
H.1 FOREWORD H-2
H.1.1 PURPOSE OF THIS MANUAL H-2
H.1.2 USE OF THIS MANUAL H-2
H.1.3 RELATED PUBLICATIONS H-3
H.1.4 COMMON TOOLS AND EQUIPMENT H-3
H.1.5 SPECIAL TOOLS AND SUPPORT EQUIPMENT H-3
H.1.7 TEST, MEASUREMENT AND DIAGNOSTIC EQUIPMENT (TMDE) H-3
H.1.7 REPAIR PARTS H-3
CHAPTER 1 GENERAL INFORMATION AND SYSTEM DESCRIPTION H-4
SECTION I GENERAL INFORMATION H-7
H.2 GENERAL INFORMATION H-7
H.2.1 SCOPE H-7
H.2.2 STANDARDS AND PROCEDURES H-7
H.2.3 EQUIPMENT NAME AND PART NUMBER H-7
H.2.4 PURPOSE OF EQUIPMENT H-7
SECTION II EQUIPMENT DESCRIPTION H-9
H.3 EQUIPMENT DESCRIPTION H-9
H.3.1 EQUIPMENT FEATURES H-9
H.3.2 DATA BASE H-9
H.3.3 PHYSICAL CHARACTERISTICS H-9
H.3.4 POWER REQUIREMENTS H-10
H.3.5 ENVIRONMENTAL INFORMATION H-10
H.3.6 PRINCIPLE OF OPERATION H-10
H.3.7 SYSTEM INTERCONNECTIONS H-10
SECTION III COMPONENT DESCRIPTION H-12
H.4 COMPONENT DESCRIPTION H-12
H.4.1 MCA H-12
CHAPTER 2 MAINTENANCE INSTRUCTIONS H-18
SECTION I MAINTENANCE INSTRUCTIONS H-20
H.5 GENERAL INSTRUCTION H-20
H.5.1 GENERAL H-20

SECTION II MCA ASSEMBLY H-23
H.5.2 MCA ASSEMBLY H-23
SECTION III EMI FILTER ASSEMBLY, P/N AY20412144 ..... H-32
H.6 EMI FILTER ASSEMBLY, P/N AY20412144 ..... H-32
H.6.1 GENERAL H-32
H.6.2 TEST EQUIPMENT AND SPECIAL TOOLS REQUIRED H-32
H.6.3 MATERIAL REQUIRED H-32
H.6.4 GENERAL REPAIR REQUIREMENTS H-33
H.6.5 REMOVAL (REFER TO FIGURE H-11) H-33
H.6.6 INSTALLATION (REFER TO FIGURE H-11) H-34
H.6.7 INSPECTION H-34
H.6.8 FAULT ISOLATION H-36
SECTION IV SWITCH ASSEMBLY, P/N AY20412557 ..... H-39
H.7 SWITCH ASSEMBLY, P/N AY20412557 ..... H-39
H.7.1 GENERAL H-39
H.7.2 TEST EQUIPMENT AND SPECIAL TOOLS REQUIRED H-39
H.7.3 GENERAL REPAIR REQUIREMENTS H-40
H.7.4 REMOVAL (REFER TO FIGURE H-11) H-40
H.7.5 INSTALLATION (REFER TO FIGURE H-11) H-40
H.7.6 INSPECTION H-40
H.7.7 FAULT ISOLATION H-42
SECTION V MCA - MVS CABLE, P/N WA20410634 ..... H-43
H.8 MCA - MVS CABLE, P/N WA20410634 ..... H-43
H.8.1 GENERAL H-43
H.8.2 TEST EQUIPMENT AND SPECIAL TOOLS REQUIRED H-43
H.8.3 MATERIAL REQUIRED H-43
H.8.4 GENERAL REPAIR REQUIREMENTS H-44
H.8.5 INSPECTION H-45
H.8.6 CONTINUITY TEST H-45
SECTION VI MCA CCA CABLE, P/N WA20412122 ..... H-48
H.9 SECTION VII. MCA CCA CABLE, P/N WA20412122 ..... H-48
H.9.1 GENERAL H-48
H.9.2 TEST EQUIPMENT AND SPECIAL TOOLS REQUIRED H-48
H.9.3 MATERIAL REQUIRED H-48

H.9.4 GENERAL REPAIR REQUIREMENTS (REFER TO FIGURE H-16) H-49
H.9.5 INSPECTION H-50
H.9.6 CONTINUITY TEST H-50
CHAPTER 3 DATA BASE EDITOR H-53
H.10 DATA BASE EDITOR H-53
H.10.1 GENERAL H-53
H.10.2 APPLICABLE DOCUMENTS H-54
H.10.3 OPERATING INSTRUCTIONS H-54
CHAPTER 4 REPROGRAMMING H-66
H.11 REPROGRAMMING H-66
H.11.1 GENERAL H-66
H.11.2 REPROGRAMMING H-66
CHAPTER 5 PREPARATION FOR SHIPMENT AND STORAGE H-70
H.12 PREPARATION FOR SHIPMENT AND STORAGE H-70
H.12.1 GENERAL H-70
H.12.2 PACKING H-70
H.12.3 SHIPMENT IN CRATES H-72
H.12.4 STORAGE H-72
CHAPTER 6 OVERHAUL PROCEDURES H-73
SECTION I GENERAL H-73
H.13 OVERHAUL PROCEDURES H-73
H.13.1 GENERAL H-73
SECTION II CPU, CIRCUIT CARD ASSEMBLY H-74
H.14 CPU, CIRCUIT CARD ASSEMBLY H-74
H.14.1 GENERAL H-74
CHAPTER 7 GLOSSARY H-86
H.15 GLOSSARY H-86
H.15.1 ACRONYMS H-86
CHAPTER 8 FOLDOUT DIAGRAMS H-88
H.16 FOLDOUT DIAGRAMS H-88

SECTION I
GENERAL INFORMATION

H.2. GENERAL INFORMATION

H.2.1 Scope

This Appendix provides operating and maintenance instructions for the muzzle velocity system (MVS) communication adapter (MCA).

H.2.2 Standards and Procedures

Safety, care, and handling - refer to Para. 1.5 in this manual

Corrosion prevention and control - refer to Para. 1.6 in this manual

Destruction of army material - refer to Para. 1.7 in this manual

Decontamination of components - refer to Para. 1.8 in this manual

Reporting equipment improvement - refer to Para. 1.9 in this manual

H.2.3 Equipment Name and Part Number

The equipment name, part numbers and military nomenclature are provided in Table H-1.

Table H-1. MCA Product Components, Name and Part Numbers.

Component	Part Number	Military nomenclature
MVS Communication Adapter.	RSL P/N: AY20412152 NSN: 7035-01-468-6532	Muzzle Velocity System Communication Adapter
MCA - CCA Cable	RSL P/N: WA20412122 NSN: 6150-01-468-5178	MCA - CCA Cable
MCA - MVS Cable	RSL P/N: WA20410634 NSN: 6150-01-468-5178	MCA - MVS Cable
MCA Programming Cable	RSL P/N: WA20413604 NSN: 6150-01-468-9384	MCA Reprogramming Cable
MCA Carrying Case	RSL P/N: PK20412315	MCA Carrying Case

H.2.4 Purpose of Equipment

The purpose of the MCA and its interconnection cables is to enable communication between the Battery Computer system (BCS) and the M94 muzzle Velocity system. By communicating with the MVS, the BCS can automatically operate the MVS, and retrieve the measured muzzle velocities. The MCA is connected to the existing gun Display Unit (GDU) without degrading or affecting its normal operation. At all times communication between BCS and SCA has priority over communication between BCS and MCA.

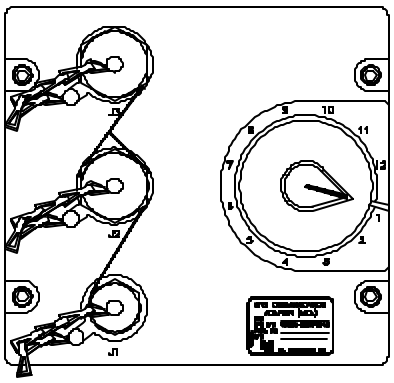

MVS COMMUNICATION ADAPTER, MCA

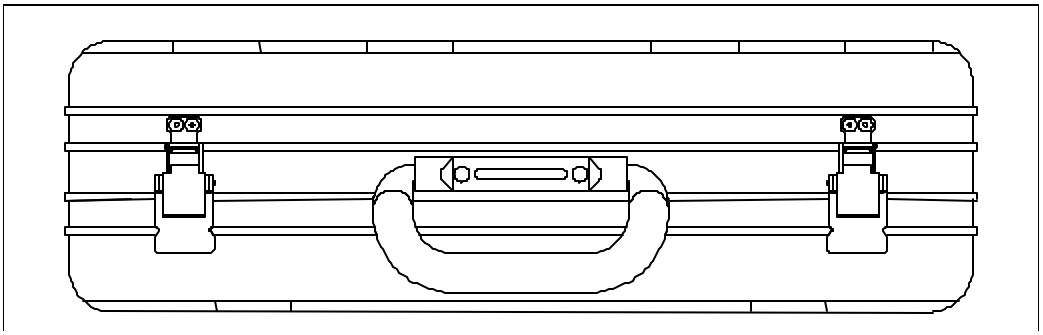

MCA CARRYING CASE

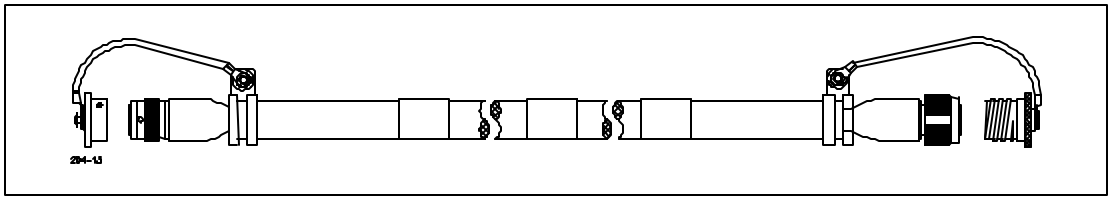

MCA – MVS CABLE

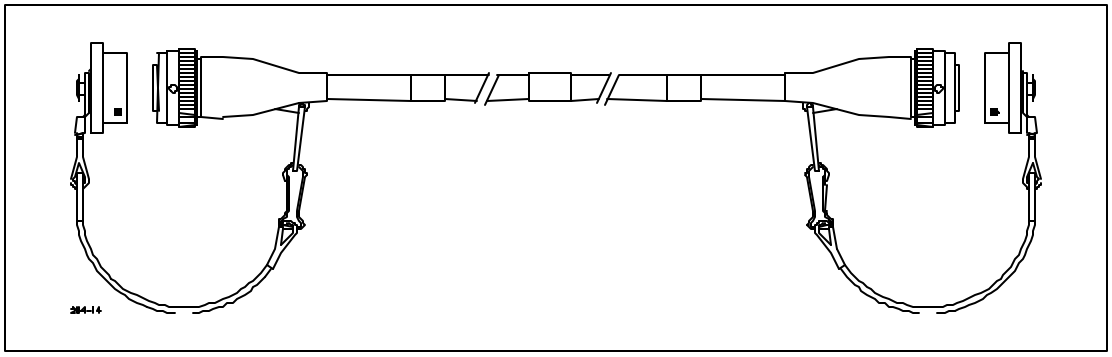

MCA - CCA CABLE

Figure H-1. MCA Components

SECTION I

EQUIPMENT DESCRIPTION

H.3 EQUIPMENT DESCRIPTION

H.3.1 Equipment Features

FSK Communication Channel	The MCA has Digital FSK (Frequency Shift Keying Standard) communication channel, adapted to the CCA (Control Case Assembly) frequencies requirement.
RS232 Communication Channel	The MCA has RS232 standard, communication channel, to communicate with the MVS, and to enable field reprogramming.
Memory Retention	All vital data is stored in nonvolatile memory.
Storage Capability	The MCA stores guns, projectiles, fuses and propellant correlation Tables, between the BCS codes and the M94 data.
Field Programming	The MCA can be reprogrammed In the field, for updating the stored ammunition correlation Tables.
Manual Address Selection	The MCA has a 12 position rotary switch, to enable manual address selection.

H.3.2 Data Base

The MCA stores all types of standard guns, projectiles, fuses and propellant correlation Tables. These Tables correlate between the BCS and the MVS Firing Tables (FCI). The correlation Tables can be updated by reprogramming the MCA.

H.3.3 Physical Characteristics

a. MCA
   1. Size (H x W x D) 6.89 x 6.5 x 2.32 inch (175 x 165 x 59mm)
   2. Weight 3.5lb (1.6Kg)

b. MCA - CCA Cable
   1. Length 4.95 yd (4.5 m)
   2. Weight 1.9lb (860 g)

c. MCA - MVS Cable
   1. Length 2.75 yd (2.5 m)
   2. Weight 0.9lb (365 g)

d. MCA Carrying Case

1. Size (H x W x D) 13.5 x 18 x 5.4 inch (342 x 460 x 138 mm)
2. Weight 5.4lb (2.5Kg)

e. Programming Cable

1. Length 2.2 yd (2 m)
2. Weight 0.3lb (144 g)

H.3.4 Power Requirements

The MCA is powered by the CCA 5 volts power source.

Operating Voltage 4.5 – 5.5 VDC

Power consumption 0.5 W (100mA)

H.3.5 Environmental Information

The MCA will function properly without degradation under the following conditions.

a. Operation temperature from –50º F to +120º F.
b. Storage temperature from –50º F to +150º F.
c. Relative humidity 0-95% (including condensation).
d. Shocks and vibration present during gunfire and transport.
e. Rain and wind.
f. Sand and dust.
g. Salt fog.
h. Environments leading to growth of fungus.

H.3.6 Principle of Operation

The BCS provides tactical fire control for up to 12 Howitzer guns at the same time and on the same communication channel. The method of synchronization is the master/slave protocol. Therefore, upon power up each MCA is initialized with the gun number with which it associates. The gun number is manually determined by the operator, using the 12 position rotary switch on the MCA. The MCA monitors all the data on the communication channel and interprets only messages directed to it. Messages containing firing commands and control data will be processed and transferred to the MVS. The operator interface to control the MVS is described in the BCS operating manual.

H.3.7 System Interconnections

The system interconnections are shown in Figure H-2. The MCA is connected in series between the CCA and the Section Chief Assy (SCA). It is also connected to the MVS communication connector.

Table H-2. MCA Interconnection Description

Cable Name	Connecting Description
MCA – CCA Cable	MCA-J3 to CCA - P1
MCA – MVS Cable	MCA-J1 to MVS - J2
W35 – MCA TO SCA Cable	MCA-J2 to SCA - P1

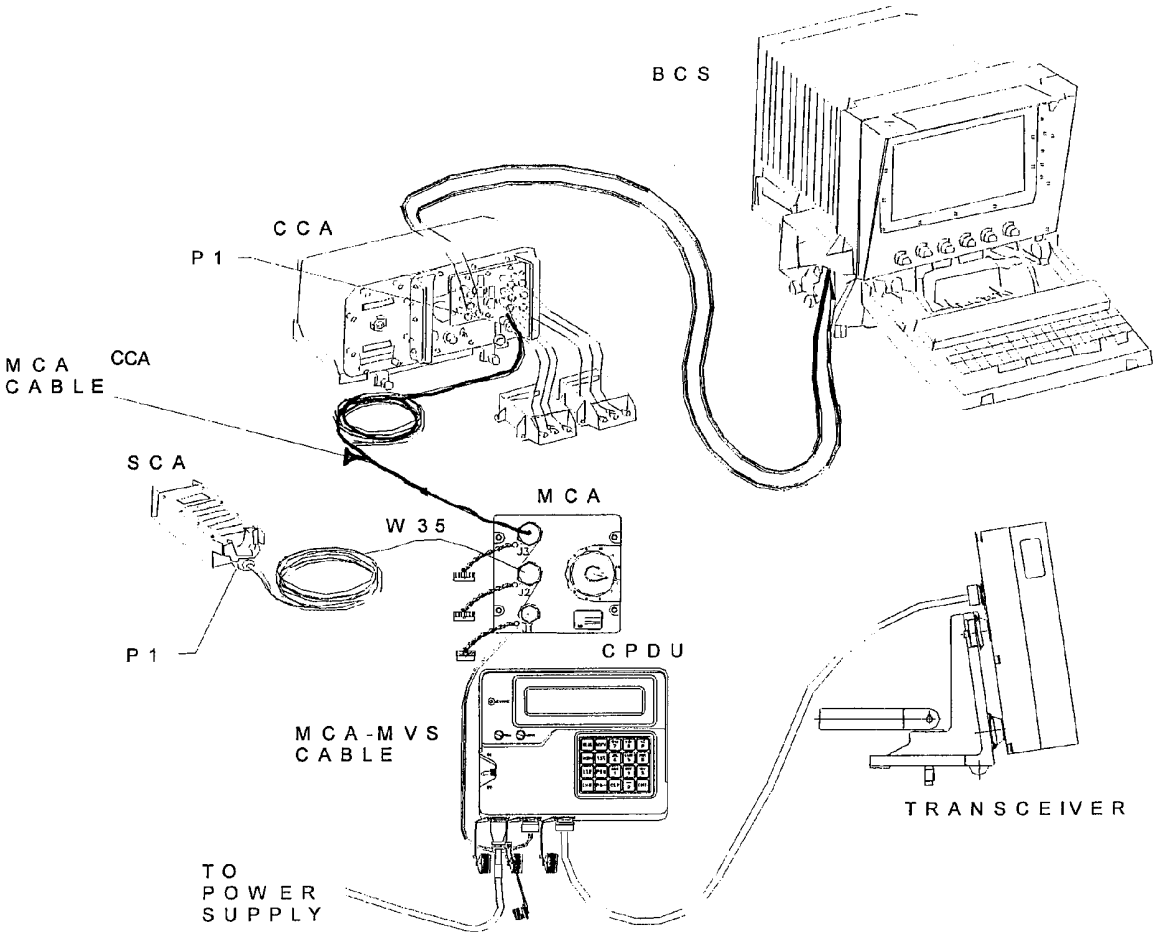

Figure H-2. System Interconnections

SECTION II

COMPONENT DESCRIPTION

H.4 COMPONENT DESCRIPTION

H.4.1 MCA

For the following description, refer to the MCA outline Figure H-3, index description Table H-3 and block diagram Figure H-4.

The MCA is a small, lightweight unit with very low power consumption.

It has four screws, at each corner, for installation in the gun.

The MCA contain two circuit card assemblies, a switch assembly and three connectors for interface with the outside. The MCA construction is modular for ease of maintenance. Each assembly can be easily removed and replaced in case of a failure.

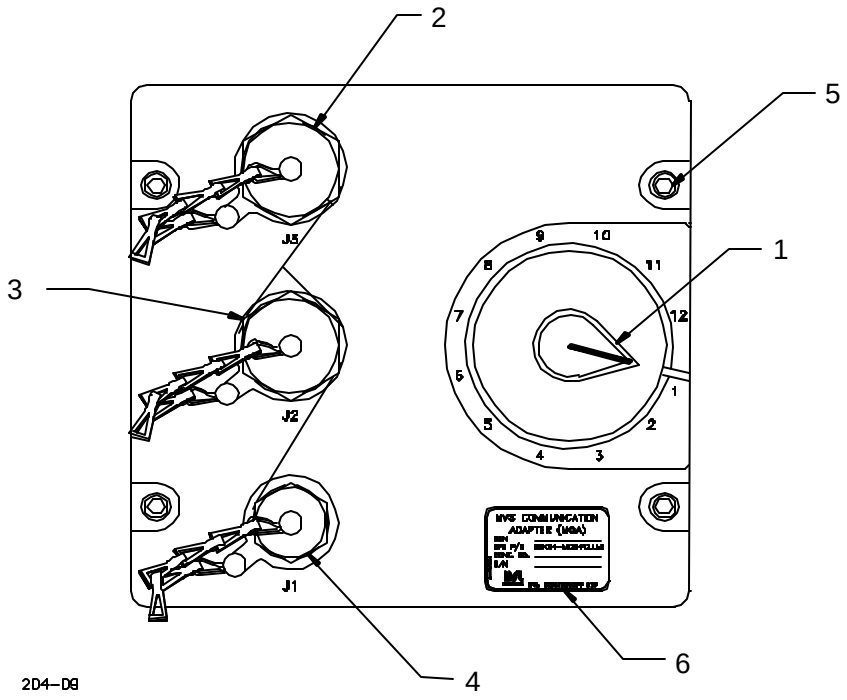

Figure H-3. MCA Outline

Table H-3. Index Description

Index No.	Component Name	Function
1	Rotary switch	Enables gun address selection
2	J3	MCA - CCA interface connector
3	J2	MCA - SCA interface connector
4	J1	MCA - MVS interface connector
5	Four captive screws	Enables installation in the gun
6	Name plate	Contain the unit part number, name and serial number to ease identification.

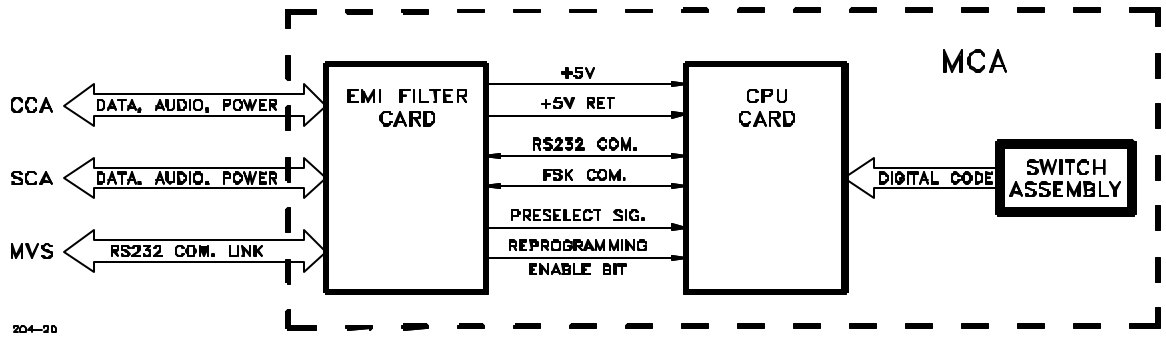

Figure H-4. MCA Block Diagram

H.4.1.1 CPU Circuit Card Assembly

For the following description refer to the block diagram in Figure H-5.

The CPU circuit card assembly, hereafter referred to as CPU Card, performs all main tasks of the MCA. The CPU card circuits and parameters are as follows:

80C51 Micro controller

32K x 8 bit EEPROM
32K x 8 bit RAM
FSK modulator and demodulator
Serial communication link, RS-232 standard
Data selector
Rotary Switch interface
Power regulator
Discreet inputs
Fail Detector

H.4.1.1.1 80C51 Micro controller Circuits

The 80C51 micro controller controls all tasks of the MCA.

It has 12MHz clock and 8 bit data bus.

H.4.1.1.2 Program and Database Memory

The program and database memory consists of 32K x 8 bit of EEprom.

The EEprom is on-board programmable.

H.4.1.1.3 Work Memory

The work memory consist of 32K x 8 bit of Random Access Memory (RAM)

The RAM serves as sampling and processing workspace.

H.4.1.1.4 Digital FSK Modulator and Demodulator

The Digital FSK modulator and demodulator consists of the 80C51 built in UART, the 80C51 built in clock source (programmed to 307.2K Hz) and different logic Integrated circuits.

a. Modulator
   The modulator converts the communication signal high level into 38.4K Hz logic level signal and the low level into 76.8K Hz logic level signal.

b. Demodulator
   The demodulator converts 1.2K Hz logic level signal into high level and 2.4K Hz logic level signal into low level.

H.4.1.1.5 Serial Communication Link

The serial communication link consists of UART and RS232 line driver that enables the communication to the MVS.

H.4.1.1.6 Data Selector

The data selector consists of a line data select or \ multiplexer.

The data sector selects between the communication coming from the SCA and the Communication from the MCA circuits. SCA communication data has priority over the MCA.

H.4.1.1.7 Rotary Switch Interface

The rotary switch interface consists of two octal buffers.

By sampling the buffer's inputs the MCA can decode the gun address.

H.4.1.1.8 Power Regulator

The power regulator consists of high efficiency switching regulator that regulates the power input to overcome power fluctuations in the range 4.5V to 6V.

H.4.1.1.9 Discreet Inputs

There are several discreet inputs for general use.

H.4.1.1.10 Fail Detector

The fail detector circuit provides the required reset signal for the micro controller and other integrated circuits in case of:

a. Power up
b. power fail
c. Software fail

This ensures that the MCA circuits powers up in a known state and can recover in case of a failure.

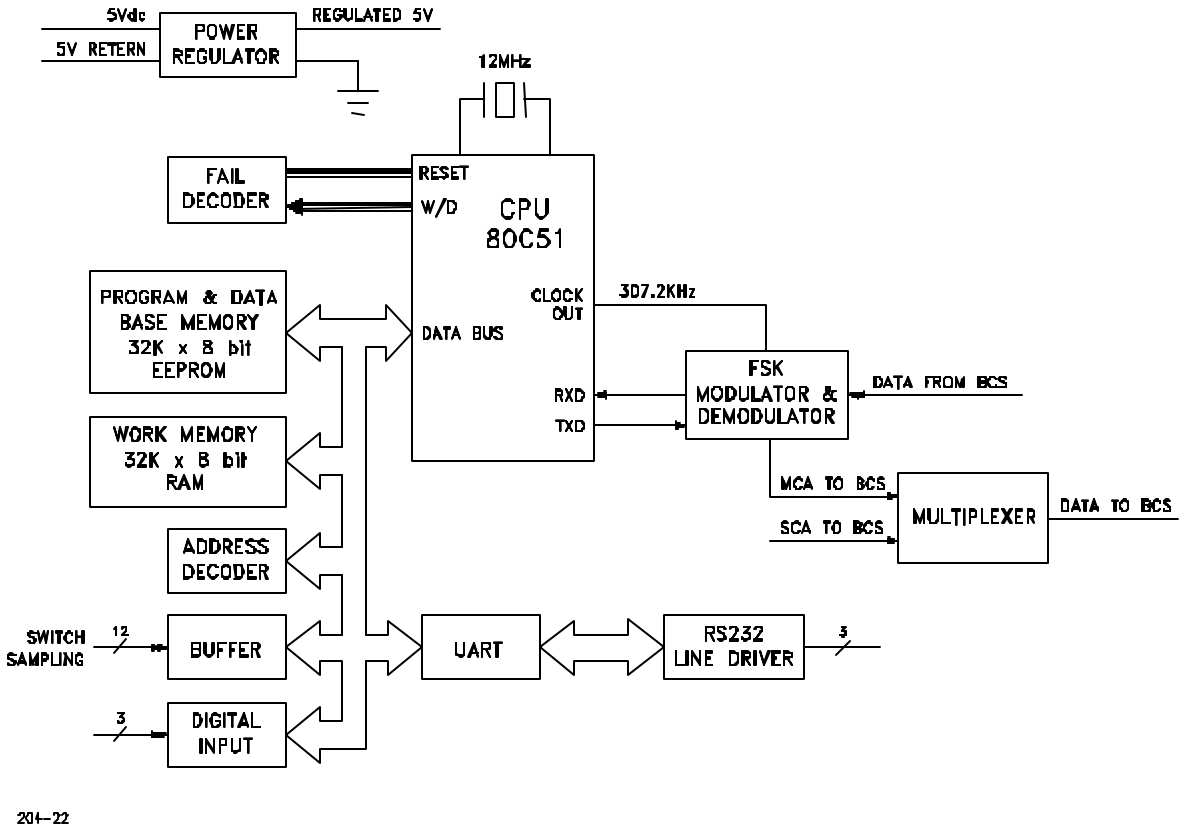

Figure H-5. CPU Circuit Card Assembly Block Diagram

H.4.1.2 EMI-FILTER Circuit Card Assembly (Refer to Figure H-6)

The Emi-filter circuit card assembly contains three circular connectors and EMI/RFI filters.

H.4.1.3 Switch Assembly (Refer to Figure H-6)

The switch assembly consists of 12 positions rotary switch wired up to connector. The connector can be easily connected to its mate mounted on the EMI-Filter circuit card assembly.

H.4.1.4 Housing Assembly (Refer to Figure H-6)

The housing assembly forms a rigid construction and incorporates all electronic assemblies.

H.4.1.5 Cover Assembly (Refer to Figure H-6)

The cover assembly is used to enclose the MCA assembly. A silicon rubber sealing O-ring is positioned between the cover assembly and the housing assembly.

H.4.1.6 Screw Captive (Refer to Figure H-6)

The four screws, one at each corner of the MCA, captured in the mechanical assembly and enables installation in the gun.

H.4.1.7 Interconnection Cables

The MCA interconnection cables are manufactured using military standard wire, covered by high-performance jacket. Each cable is covered by metal Braid to provide EMI shielding. The connectors are protected by bonded boots, which are waterproof and are covered by dust-covers. Each connector is marked with its designation number and designation definition. Each cable is marked with its part number, serial number and cable name.

H.4.1.8 Carrying Case

The carrying case is used for storage and transportation.

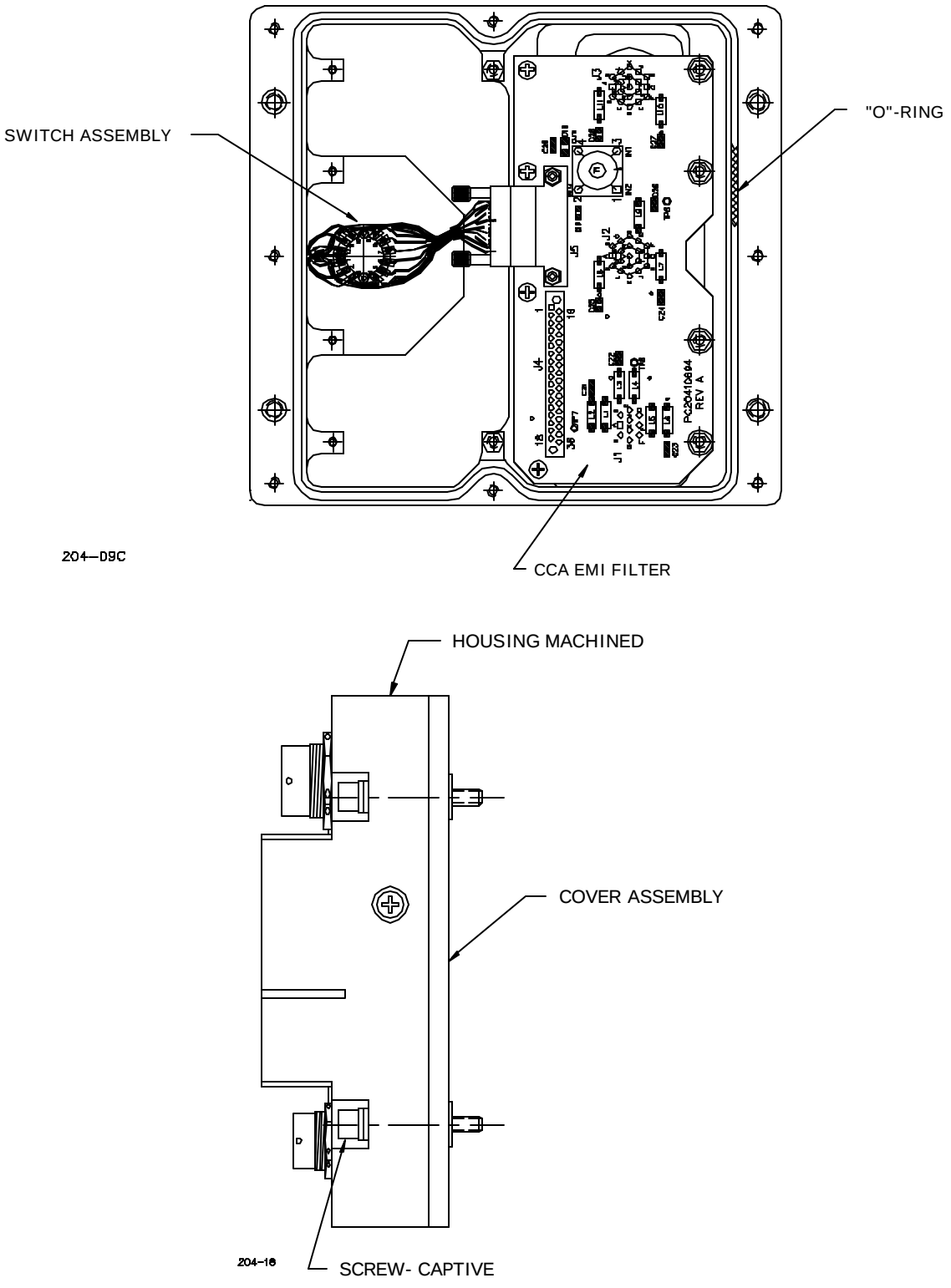

Figure H-6. MCA Description

CHAPTER 2

MAINTENANCE INSTRUCTIONS

CHAPTER CONTENT

		PAGE
CHAPTER 2	MAINTENANCE INSTRUCTIONS	H-18
SECTION I	MAINTENANCE INSTRUCTIONS	H-20
H.5	GENERAL INSTRUCTION	H-20
H.5.1	GENERAL	H-20
SECTION II	MCA ASSEMBLY	H-23
H.5.2	MCA ASSEMBLY	H-23
SECTION III	EMI FILTER ASSEMBLY, P/N AY20412144	H-32
H.6	EMI FILTER ASSEMBLY, P/N AY20412144	H-32
H.6.1	GENERAL	H-32
H.6.2	TEST EQUIPMENT AND SPECIAL TOOLS REQUIRED	H-32
H.6.3	MATERIAL REQUIRED	H-32
H.6.4	GENERAL REPAIR REQUIREMENTS	H-33
H.6.5	REMOVAL (REFER TO FIGURE H-11)	H-33
H.6.6	INSTALLATION (REFER TO FIGURE H-11)	H-34
H.6.7	INSPECTION	H-34
H.6.8	FAULT ISOLATION	H-36
SECTION IV	SWITCH ASSEMBLY, P/N AY20412557	H-39
H.7	SWITCH ASSEMBLY, P/N AY20412557	H-39
H.7.1	GENERAL	H-39
H.7.2	TEST EQUIPMENT AND SPECIAL TOOLS REQUIRED	H-39
H.7.3	GENERAL REPAIR REQUIREMENTS	H-40
H.7.4	REMOVAL (REFER TO FIGURE H-11)	H-40
H.7.5	INSTALLATION (REFER TO FIGURE H-11)	H-40
H.7.6	INSPECTION	H-40
H.7.7	FAULT ISOLATION	H-42
SECTION V	MCA - MVS CABLE, P/N WA20410634	H-43

H.8 MCA - MVS CABLE, P/N WA20410634 ..... H-43
H.8.1 GENERAL H-43
H.8.2 TEST EQUIPMENT AND SPECIAL TOOLS REQUIRED H-43
H.8.3 MATERIAL REQUIRED H-43
H.8.4 GENERAL REPAIR REQUIREMENTS H-44
H.8.5 INSPECTION H-45
H.8.6 CONTINUITY TEST H-45
SECTION VI MCA CCA CABLE, P/N WA20412122 ..... H-48
H.9 SECTION VII. MCA CCA CABLE, P/N WA20412122 ..... H-48
H.9.1 GENERAL H-48
H.9.2 TEST EQUIPMENT AND SPECIAL TOOLS REQUIRED H-48
H.9.3 MATERIAL REQUIRED H-48
H.9.4 GENERAL REPAIR REQUIREMENTS (REFER TO FIGURE H-16) H-49
H.9.5 INSPECTION H-50
H.9.6 CONTINUITY TEST H-50

SECTION I

MAINTENANCE INSTRUCTIONS

H.5 GENERAL INSTRUCTION

H.5.1 General

This Chapter provides maintenance instructions for the MCA and its interconnection cables. Refer to Chapter 6 in this appendix for depot-level maintenance instructions.

H.5.1.1 Maintenance Schedule

Table H-4. Maintenance schedule

Echelon	Maintenance Level	Maintenance Action	Paragraph	Frequency
1	Operator	Cleaning External inspection		As required Every use
2	Organizational	R&R of the MCA		As required
3\4	Direct/General support	R&R of all SRU's Repair of cables		As required As required
5	Depot	Repair of all repairable components		As required

H.5.1.2 Test Equipment and Special Tools Required

Test equipment and special tools required for the maintenance of the MCA and its interconnection cables are listed in their respective sections in this Chapter. For the equipment and tools illustrations refer to Chapter 7 Section 3 in this appendix.

H.5.1.3 Material Required

Repair materials and other consumable items required for general maintenance of the MCA are listed in Table H-5.

Other Materials required for the maintenance of the MCA and its cables are listed in their respective sections in this Chapter.

Table H-5. Material Required

Nomenclature	Part/Spec. No.	Appendix F Item No.
Acetone	0A51	1
Acid Brush	H-B-643	6
Line-Free Cloth	8722-0088	7
Methylethylketone	ASTM-D-740	14
Alcohol	TT-I-735A	24
Paint	Color 383 IAW FED-STD-595 CARC	35
Sealing Compound	83-31	16
Primer	747-55	17
Adhesive	RTV732	34

H.5.1.4 Cleaning and Lubricate

For cleaning and lubricate instructions refer to Para. 3.1.4 in this manual.

H.5.1.5 External Inspection

a. Inspect all components for security of attachment.
b. Inspect switch and knob for secure attachment and proper alignment.
c. Inspect all parts for damage, wear and deterioration.
d. Inspect all parts for nicks, cracks, scorings, dents, scratches and corrosion.
e. Inspect all threaded parts for crossed stripped or otherwise damaged threads.
f. Inspect painted surfaces for cracked, chipped, blistered or deteriorated paint film.
g. Inspect connectors for broken, bend or loose pins and secure mounting.
h. Inspect all cables for nicks, cracks and broken wires.

H.5.1.6 Internal Inspection

CAUTION

The MCA contain assemblies subjected to damage by electrostatic discharge. Use approved grounding procedures before touching, removing or inserting circuit card assemblies.

a. Inspect all components for security of attachment.
b. Inspect all parts for damage, wear and deterioration.
c. Inspect all parts for nicks, scoring, dents, scratches, and broken welds.

d. Inspect all parts for cracks, dents, scratches and corrosion.

e. Inspect all threaded parts for crossed stripped or otherwise damaged threads.

f. Inspect all electronic parts for indication of over heating, cracked bodies, loose terminals, broken leads and other indication of damage.

g. Inspect all wiring for bent or broken leads. For cracked, over heated or burned insulators; security of attachment. Check lacing for security of attachment.

h. Inspect wire bundles. Wire bundles must be securely held in place and not pinched or crimped.

i. Inspect painted surfaces for cracked, chipped, blistered or deteriorated paint film.

j. Inspect all threaded inserts and nut plates for security of attachment.

k. Inspect connectors for broken, bent, loose, damaged or missing pins.

H.5.1.7 Cable Testing

Cable assemblies testing consist of performing continuity test.

No special test equipment is required. The cables shall be tested using a digital multimeter or any other standard continuity test equipment. Each cable shall be tested for compliance with its individual wiring diagram. Refer to the appropriate section in Chapter H-2 for cable testing and repair procedures.

H.5.1.8 Minor Repair

Minor repair is limited to replacement of the switch knob and other easily accessible parts and cleaning of equipment surface.

H.5.1.9 Refinish of Painted Surface

Repair damaged MCA assembly painted surfaces in accordance with TM43-0139 using forest green CARC color IAW FED-STD-595. For U.S. Marine Corps, refer to TN4750-15/1.

WARNING

CARC paint is a carcinogenic material and must be used carefully

H.5.1.10 Replacement of Identification Plates

Replace damaged plates as follows:

a. Remove plate by peeling from case.

b. Be sure plate installation area is clean of old bonding residue.

c. Remove protective covering from the back of the plate and firmly press plate onto case.

H.5.1.11 Fail Indication

a. MCA does not response for BCS commands.

b. MCA sending the BCS status message containing fail data.

SECTION II

MCA ASSEMBLY

H.5.2 MCA ASSEMBLY

H.5.2.1 MCA Assembly, P/N AY20412152

H.5.2.1.1 General

The following paragraphs provide repair procedures and maintenance information for the MCA assembly, P/N AY20412152

H.5.2.1.2 Test Equipment and Special Tools Required

The test equipment and special tools listed in Table H-6 shall be used for testing and repairing the MCA. Each commercially available item of test equipment can be replaced by equivalent to that listed.

Table H-6. Test equipment and special tools

Nomenclature	Part/Spec. No.	Chapter H.7, Figure H-42 Item No.
DC Power Supply 0-10V 3A	Horizon, model HR-100-3	5
Digital Multimeter	Hewlett Packard, Model 3478A	7
ESD Work station Kit	M87893-02	14
Torque Wrench	TS30	16
Electronic Equipment Tool Kit	PPL863	15
Standard RS232 Communication Harness D9S to D9P	T203AC	
MCA-CCA Cable	RSL P/N: WA20412122	
MCA Tester	RSL P/N: AY20412269	3
Tester Cable	RSL P/N: WA20412280	17
MCA Unit	RSL P/N: AY20412152	
Testing Software	On diskette RSL P/N: CM20410855	
Personal Computer	IBM or IBM Compatible with: Serial port configured as COM1. Floppy disk driver, 3.5 inch, 1.44M. MS-DOS version 6.2 or higher.	

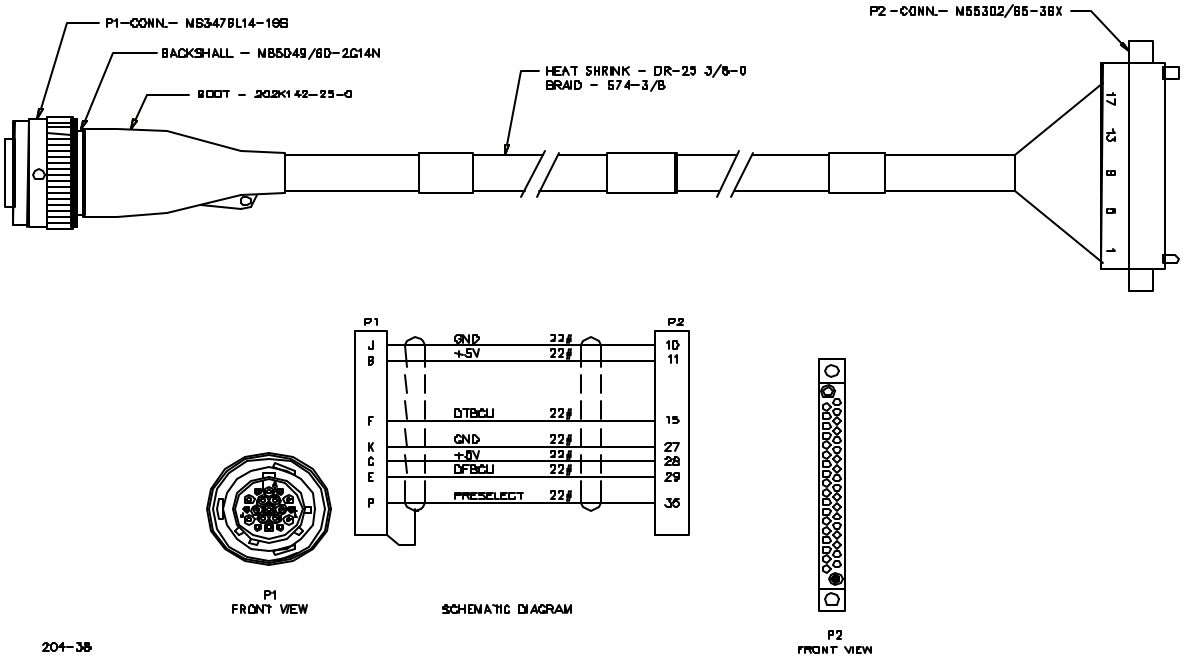

Figure H-7. Tester Cable, P/N WA20412280

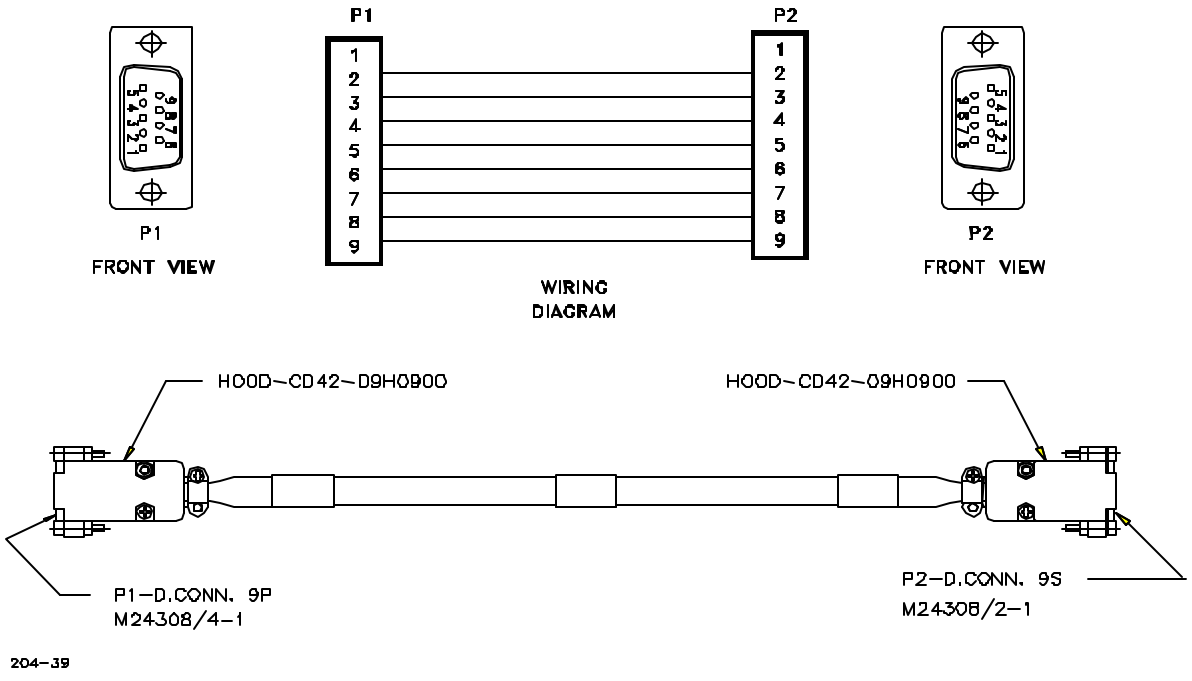

Figure H-8. Communication Harness

H.5.2.1.3 Material Required

Repair materials and other consumable items required are listed in H-7.

Table H-7. Materials Required.

Nomenclature	Parts/Spec No.	Appendix F item No.
Paint	Color 383 IAW FED-STD-595 CARC	35
Silicon Compound	MIL-S-8660, DC-4	22
Anti Static Bag	3271576	33

H.5.2.1.4 General Repair Requirements

The following general requirements apply to the repair of the MCA.

a. Ensure that MCA is not powered before disconnecting cables.

b. Disconnect MCA from all cables before assembling and disassembling.

c. Use dust caps to prevent damage to connectors.

d. Prevent damage to switch and knob.

H.5.2.1.5 Disassembly (Refer to Figure H-9)

Disassemble MCA as follows:

CAUTION

Ensure MCA is not powered prior to disassembly.

CAUTION

The MCA contains assemblies subject to damage by electrostatic discharge. Use approved grounding procedures before touching, removing or inserting circuit card assemblies.

a. Remove eight screws (1) and flat washers (2) securing cover assembly (3) to housing assembly (4).

b. Remove eight screws (5), spring washers (6), flat washers (7), two nuts (8), spring washers (9), and flat washers (10) securing the CPU card (11) to the housing assembly (4).

c. Carefully lift CPU card off housing assembly (4).

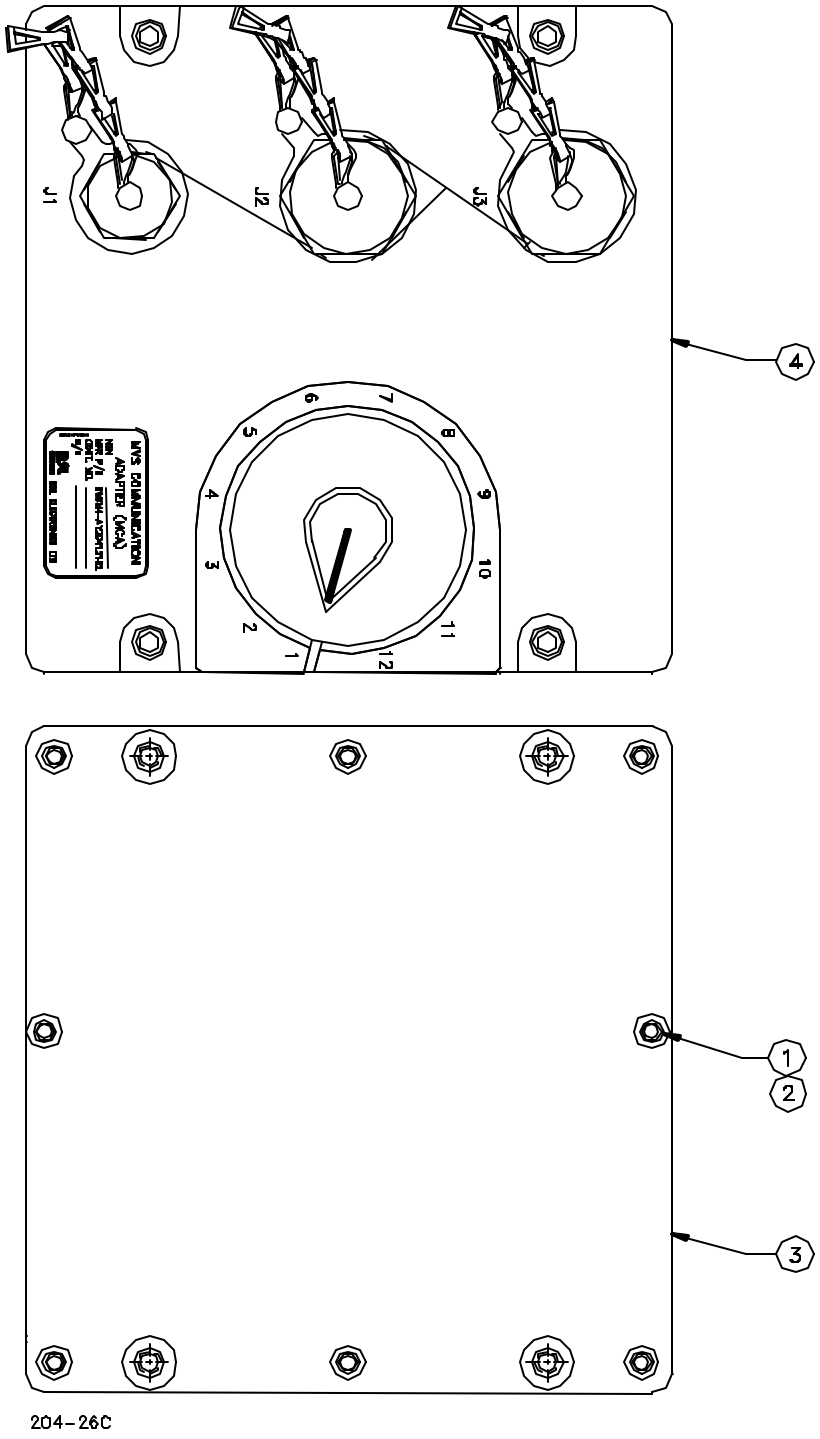

Figure H 9. MCA Assemble, (Sheet 1 of 2)

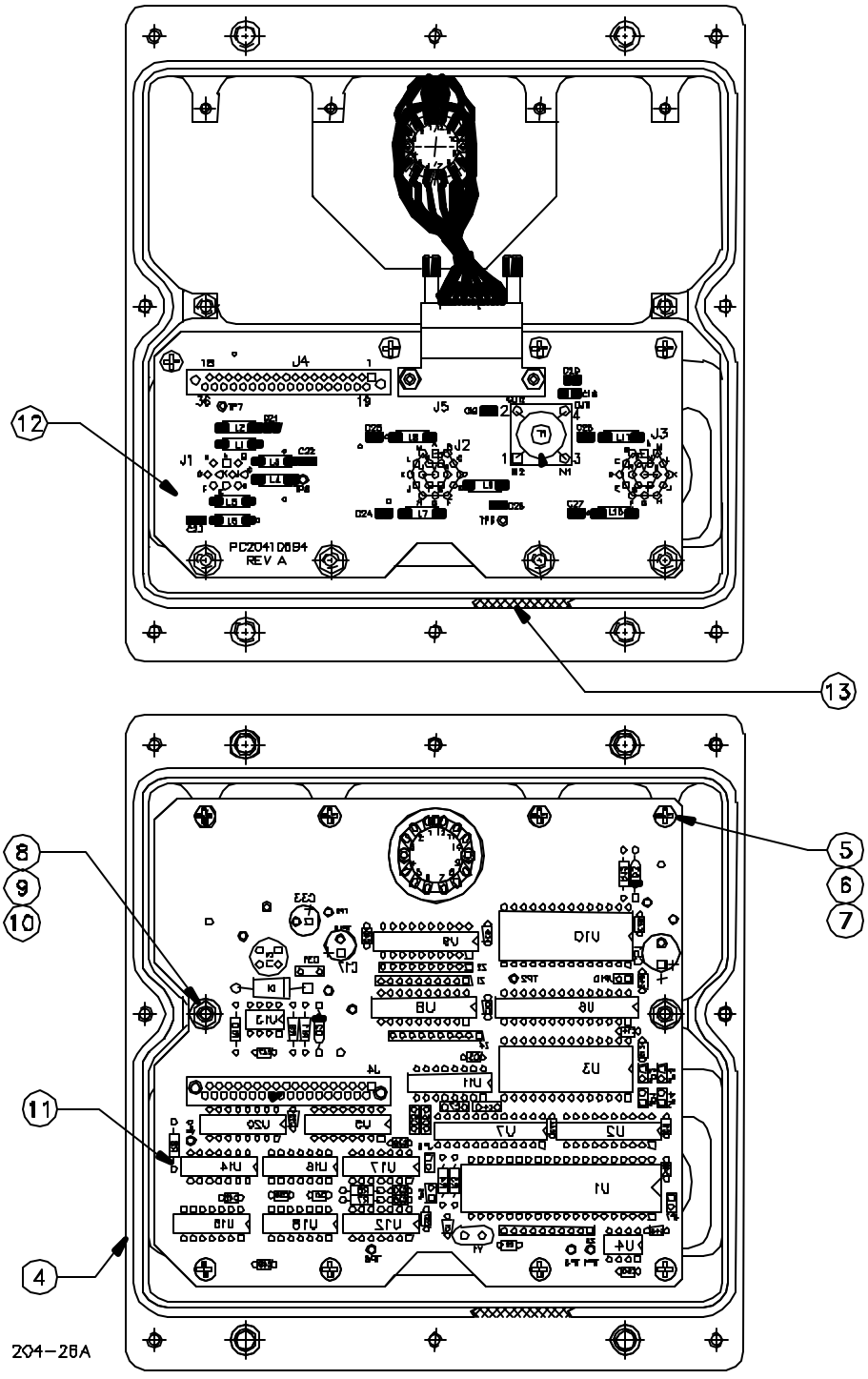

Figure H-9. MCA Assemble, (Sheet 2 of 2)

5.1.2.1.6 Reassemble (Refer to Figure H-9)

CAUTION

The MCA contains assemblies subject to damage by electrostatic discharge. Use approved grounding procedures before touching, removing or inserting circuit card assemblies.

a. Install CPU card (11) on housing assembly (4) and plug in to EMI-Filter circuit card assembly (12).

b. Secure CPU card to housing assembly with eight screws (5), spring washers (6), flat washers (7). Fasten screws using torque 5.0±0.5 LB/IN.

c. Install two nuts (8), spring washers (9), and flat washers (10) Torque nuts to 5.0±0.5 LB/IN.

d. Apply a light film of Silicon compound to “O” Ring (13).

e. Secure cover assembly (3) to housing assembly (4) with eight screws (1) and flat washers (2). Torque screws to 18±0.5 LB/IN

H.5.2.1.7 Inspection

Inspect MCA as follows:

a. Inspect all components for security of attachment.

b. Inspect all parts for damage, wear and deterioration.

c. Inspect all threaded parts for crossed stripped or otherwise damaged threads.

d. Inspect all wiring for bent or broken leads. For cracked, over heated or burned insulators; security of attachment. Check lacing for security of attachment.

e. Inspect connectors for broken, bent or loose pins and secure mounting.

f. Repair or replace all faulty or damaged parts before performing functional test.

H.5.2.1.8 Functional Test

The functional test setup is as shown in Figure H-10.

Communication harness can be locally manufactured using the components as defined in Figure H-8.

a. Verify tester power switch is off.

b. Adjust power supply output to 5.6±0.1Vdc.

c. Connect standard communication harness between PC COM1 and MCA tester J2.

d. Short pin “A” to pin “B” at both MCA’s J1, by the mating plug or by wire.

e. Connect the unit under test (UUT) to the tester using Tester cable.

f. Connect the MCA to the UUT using MCA–CCA cable.

g. Verify “PROG” switch on tester panel is off.

h. Set UUT selector to “1”.

i. Set MCA selector to “2”.

j. Turn tester power switch ON.

k. Turn PC ON.

l. Run testing software ATP.EXE on PC. Select “ESS” from the main menu by typing “1” and follow the instructions on the screen.

m. Type “2” units under test.

n. Type the serial number of the UUT and press “ENTER”

o. Type the serial number of the MCA and press “ENTER”

p. Wait to the test result appear on PC screen.

q. Press “ESC” twice to return to the main menu.

r. Turn tester power switch OFF.

s. Disconnect MCA-CCA cable from UUT.

t. Turn tester power switch ON.

u. Select from the main menu “CPU;TOP ASSY”, by typing “2”.

v. The following message will appear on the PC screen:

Testing MCA number 1…
MCA number 1, version 1.7 is O.K

In case of a fault, the following message will appear:

MCA number 1 has failed
Failure time Mon Mar 07 18:04:00 2000

Repeat this test for all 12 positions of the selector. Verify the PC identifies the position of the selector and the version of software is as required.

w. Turn tester power switch OFF.

x. End of test.

H.5.2.2 Fault Isolation

H.5.2.2.1 If test results on the PC screen are **"failed" at all selector positions**.

a. Verify J1/ A is shortened to J1/B at UUT and MCA.
b. Verify all cables connected properly.
c. Verify power supply voltage is 5.6±0.1Vdc
d. Verify PROG Switch on tester panel was off prior to power on.
e. Verify communication harness connected to PC COMM-1.
f. Replace CPU circuit card assembly. (Para. H.8.2)
g. Replace EMI-filter circuit card assembly. (Para. H.2.3)
h. Replace switch assembly. (Para. H.2.4)

H.5.2.2.2 If test results on the PC screen are **"failed" at specific positions of the selector.**

a. Replace switch assembly. (Para. H.2.4)
b. Replace CPU circuit card assembly. (Para. H.8.2)
c. Replace EMI-filter circuit card assembly. (Para. H.2.3)

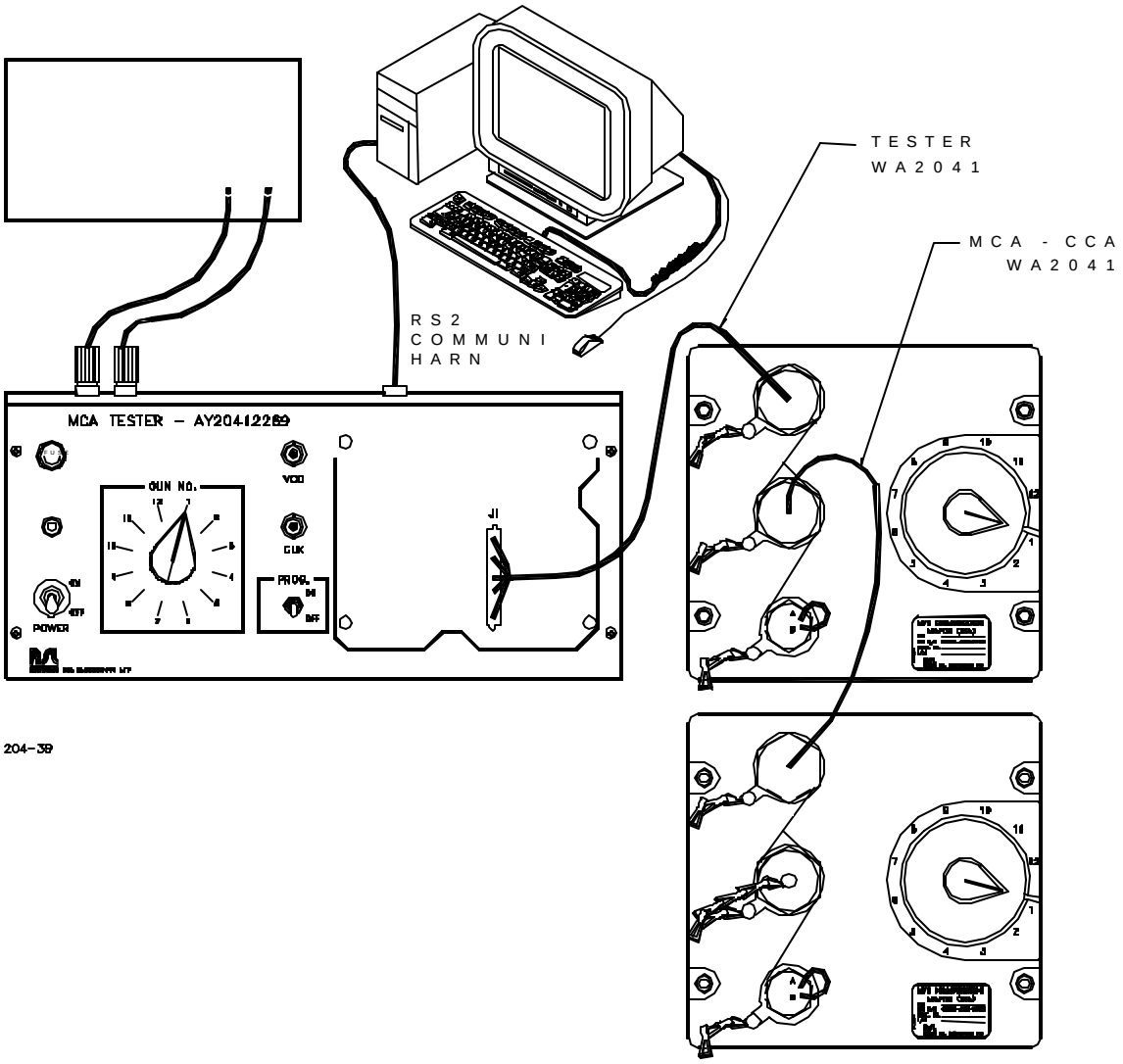

Figure H-10. MCA Test Set-up

SECTION III

EMI FILTER ASSEMBLY, P/N AY20412144

H.6 EMI FILTER ASSEMBLY, P/N AY20412144

H.6.1 General

The following paragraphs provide repair procedures and maintenance information for the EMI-filter assembly, P/N AY20412144

H.6.2 Test Equipment and Special Tools Required

The test equipment and special tools listed in Table H-8 shall be used for testing and repairing the EMI-filter Assembly. Each commercially available item of test equipment can be replaced by equivalent to that listed.

Table H-8. Test Equipment and Special Tools

Nomenclature	Part/Spec. No.	Chapter 7, Figure H-42 Item No.
Digital Multimeter	Hewlett Packard, Model 3478A	7
ESD Work station Kit	M87893-02	14
Electronic Equipment Tool Kit	PPL863	15

H.6.3 Material Required

Repair materials and other consumable items required are listed in Table H-9.

Table H-9. Material Required

Nomenclature	Parts/Spec No.	Appendix F Item No.
Adhesive	MIL-A-46146, TYPE III	
PRIMER	MIL-S-22473, grade T, 747-55	
Sealing Compound	MIL-S-22473, grade CV, ML-116	
Insulation compound	MIL-I-46058 type 1B31	
Solder wire	SN63WRMAP3-0.6MM	
Anti static bag	3271576	

H.6.4 General Repair Requirements

CAUTION

The EMI-Filter assembly contains components subject to damage. By electrostatic discharge (ESD) Use approved grounding procedures. Before touching, removing, or inserting Assembly.

a. Ensure that components are properly oriented before installing.

b. Connectors must be mounted flush to board. No angle is allowed.

c. Apply primer MIL-S-22473, grade T and sealing compound MIL-S-22473, grade CV to treads of J5.

d. Do not bend or cut leads of J1, J2, J3, J4 and J5.

e. Apply uniform coating of MIL-I-146058 type 1B31 insulation compound, 0.003±0.002 inch thick, where compound has been removed during repair process.

f. After applying insulation compound, Bond transformer T1 to board using adhesive, MIL-A-46146 TYPE III.

g. Do not apply insulation compound to mounting holes or connector contacts.

H.6.5 Removal (Refer to Figure H-11)

Remove EMI-filter assembly from Housing assembly as follows:

CAUTION

The EMI-Filter assembly contains components subject to damage by electrostatic discharge (ESD). Use approved grounding procedures before touching, removing, or inserting Assembly.

a. Perform MCA disassembly IAW Para. H.5.2.1.5
b. Remove safety wire (1) from J1 (2), J2 (3) and J3 (4).
c. Remove dust caps from J1 (2), J2 (3) and J3 (4).
d. Remove nuts (5/6/7) securing connectors J1, J2 and J3 to Housing (14).
e. Remove dust cap retainers from J1 (2), J2 (3) and J3 (4).
f. Remove four screws (8), spring washers (9) and flat washers (10), securing EMI-filter Assy.(13) to housing Assy (14).
g. Remove four spacers (11) and flat washers (12), securing EMI-filter Assy.(13) to housing Assy (14).
h. Lift EMI-filter Assembly (13) off Housing Assembly (14) slightly and disconnect switch assembly connector (15) from EMI-filter.

i. Carefully Lift EMI-filter Assembly off Housing Assembly.

NOTE

After removing the EMI-filter assembly from Housing, “O" rings of J1 (2), J2 (3), and J3 (4) remain loose. It is recommended to reinstall connectors nut.

H.6.6 Installation (Refer to Figure H-11)

Install EMI-filter assembly follows:

CAUTION

The EMI-Filter assembly contains components subject to damage. By electrostatic discharge (ESD) Use approved grounding procedures. Before touching, removing, or inserting Assembly.

a. Carefully install EMI-Filter assembly (13) on housing assembly (14). Verify connectors “O” Ring are properly installed.

b. Plug in switch assembly connector (15) to EMI-filter.

c. Secure EMI-Filter assembly (13) to housing (14) using four screws (8), Spring washers (9), flat washers (10), four spacers (11) and flat washers (12).

d. Install dust caps on J1 (2), J2 (3) and J3 (4).

e. Secure connectors J1 (2), J2 (3) and J3 (4) with nuts (5/6/7).

f. Secure connectors nuts using safety wire (1)

g. Perform MCA reassemble IAW Para. H.1.2.1.6.

H.6.7 Inspection

a. Inspect all components for security of attachment.

b. Inspect all parts for damage, wear and deterioration.

c. Inspect all parts for nicks, scoring, dents, scratches, and broken welds.

d. Inspect all threaded parts for crossed stripped or otherwise damaged threads.

e. Inspect all parts for cracks, dents, scratches and corrosion.

f. Inspect all electronic parts for indication of over heat, cracked bodies, loose terminals, broken leads and other indication of damage.

g. Inspect connectors for broken, bend, loose, damaged or missing pins.

h. Repair or replace all fault or damaged parts

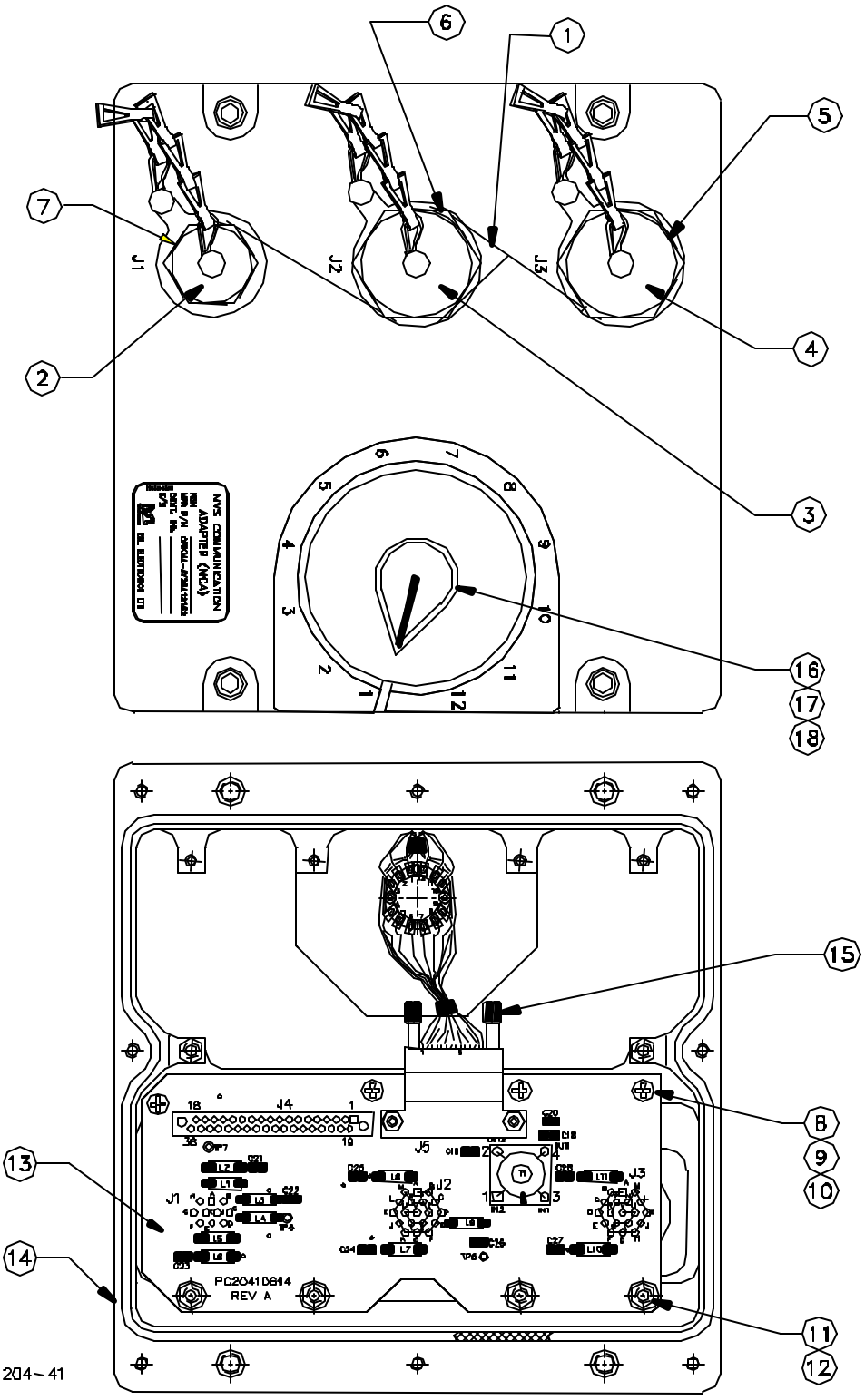

Figure H-11. EMI-Filter & Switch Assembly Installation

H.6.8 Fault Isolation

Perform continuity test using digital multimeter or any other standard continuity test equipment. The test shall be performed according to Table H-10.

Table H-10. EMI-Filter Assembly Continuity Test.

From	To	Maximum Resistance	Possible Faulty Part
J3/A	J2/A	0.5Ω	J3, J2, PWB
J3/B	J3/C, J2/B, J2/C, J4/10, J4/28	0.5Ω	T1, J3, J2, J4
J3/D	J2/D	0.5Ω	J3, J2, PWB
J3/E	J2/E, J4/29	0.5Ω	L9, J2, J4, J3
J3/F	J4/15	0.5Ω	L10, J3, J4
J3/G	J2/G	0.5Ω	J3, J2, PWB
J3/H	J2/H	0.5Ω	J3, J2, PWB
J3/J	J3/K, J2/J, J2/K, J5/14, J4/10, J4/27	0.5Ω	T1, J3, J2, J4, J5
J3/L	J2/L	0.5Ω	J3, J2, PWB
J3/M	J2/M	0.5Ω	J3, J2, PWB
J3/N	J2/N	0.5Ω	J3, J2, PWB
J3/P	J4/35	0.5Ω	L11, J3, J4
J3/R	J2/R	0.5Ω	J3, J2, PWB
J3/S	J2/S	0.5Ω	J3, J2, PWB
J3/T	J2/T	0.5Ω	J3, J2, PWB
J3/U	J2/U	0.5Ω	J3, J2, PWB
J3/V	J2/V	0.5Ω	J3, J2, PWB
J2/F	J4/32	0.5Ω	L7, J2, J4, PWB
J2/P	J4/33	0.5Ω	L8 J2, J4, PWB
J1/A	J4/19	0.5Ω	L1, L2, J1, J4, PWB
J1/B	J4/1	0.5Ω	L3, L4 J1, J4, PWB
J1/C	J4/10	0.5Ω	L5, L6 J1, J4, PWB
J1/E	J4/9	0.5Ω	J1, J4, PWB
J1/F	J4/25	0.5Ω	J1, J4, PWB
J5/1	J4/20	0.5Ω	J5, J4, PWB

From	To	Maximum Resistance	Possible Faulty Part
J5/2	J4/21	0.5Ω	J5, J4, PWB
J5/3	J4/22	0.5Ω	J5, J4, PWB
J5/4	J4/23	0.5Ω	J5, J4, PWB
J5/5	J4/24	0.5Ω	J5, J4, PWB
J5/6	J4/26	0.5Ω	J5, J4, PWB
J5/8	J4/2	0.5Ω	J5, J4, PWB
J5/9	J4/3	0.5Ω	J5, J4, PWB
J510	J4/4	0.5Ω	J5, J4, PWB
J5/11	J4/5	0.5Ω	J5, J4, PWB
J5/12	J4/7	0.5Ω	J5, J4, PWB
J5/13	J4/8	0.5Ω	J5, J4, PWB

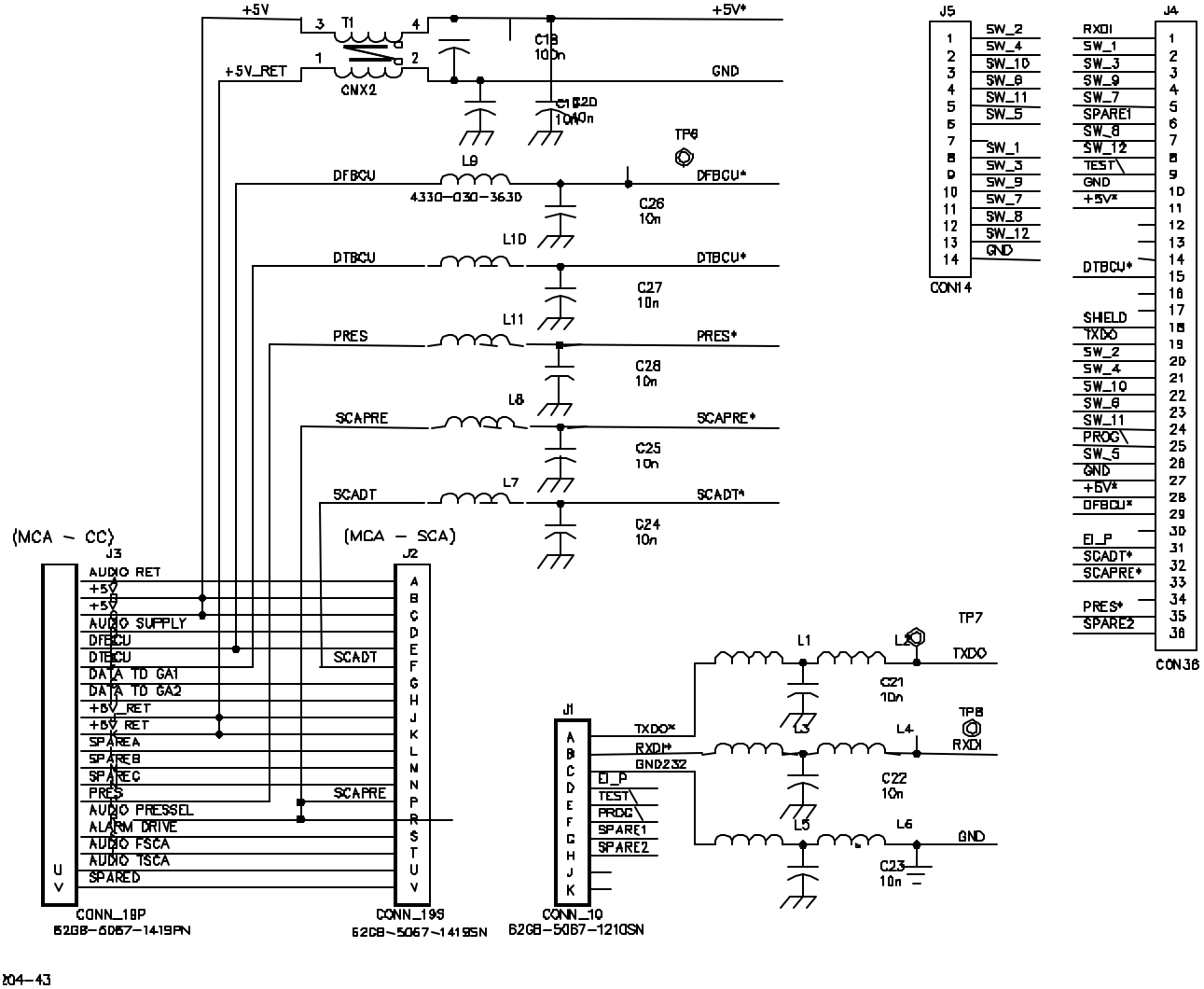

204-43

Figure H-12. EMI-Filter, Schematic Diagram

SECTION IV

SWITCH ASSEMBLY, P/N AY20412557

H.7 SWITCH ASSEMBLY, P/N AY20412557

H.7.1 General

The following paragraphs provide repair procedures and maintenance information for the switch assembly, P/N AY20412557

H.7.2 Test Equipment and Special Tools Required

The test equipment and special tools listed in Table H-11 shall be used for testing and repairing the switch Assembly. Each commercially available item of test equipment can be replaced by equivalent to that listed.

Table H-11. Test Equipment and Tools

Nomenclature	Part/Spec. No.	Chapter H.7, Figure H-42 Item No.
Digital Multimeter	Hewlett Packard, Model 3478A	7
Heat Gun	Master Mite, model 10008	1
Crimping Tool	M22520/2-01	8
Contact positioner	M22520/2-06	10
Insertion/Extraction Tool	M81969/14-01	12
Electronic Equipment Tool Kit	PPL863	15

H.7.2.1 Material Required

Repair materials and other consumable items required are listed in Table H-12.

Table H-12. Material Required

Nomenclature	Pars/Spec No.	Appendix F Item No.
Heat Shrink Sleeve	M23053/18-202-C	32
Lacing Wire, Black	MIL-T-43435	11
Wire	M22759/32-24-9	
Solder Wire	SN63WRMAP3-0.6MM	23
Contact Socket	WTK2222SA	

H.7.3 General Repair Requirements

a. Do not over heat switch contacts during repair process.

b. Ensure replaced wires are not stretched.

c. Wire IAW wiring Table, Figure H-13.

H.7.4 Removal (Refer to Figure H-11)

Remove switch assembly from Housing as follows:

a. Perform MCA disassembly IAW Para. H.2.2.5.

b. Remove switch Knob (16).

c. Remove switch nut and washer key (17/18).

d. Release switch assembly connector (15) from EMI-filter (13).

e. Carefully Lift switch assembly off Housing Assembly.

H.7.5 Installation (Refer to Figure H-11)

Install switch assembly as follows:

a. Install switch assembly on housing assembly.

b. Plug in switch assembly connector (15) to EMI-filter (13).

c. Install washer key (18).

d. Secure switch nut (17).

e. Secure switch knob (16).

f. Perform MCA reassemble IAW Para. H.1.2.1.6.

H.7.6 Inspection

a. Inspect all parts for damage, wear and deterioration.

b. Inspect connector for broken, bend, loose, damaged or missing pins.

c. Inspect all wiring for bent or broken leads. For cracked, over heat or burned insulators; security of attachment. Check lacing for security of attachment.

d. Inspect wire bundles. Wire bundles must be securely held in place and not pinched or crimped.

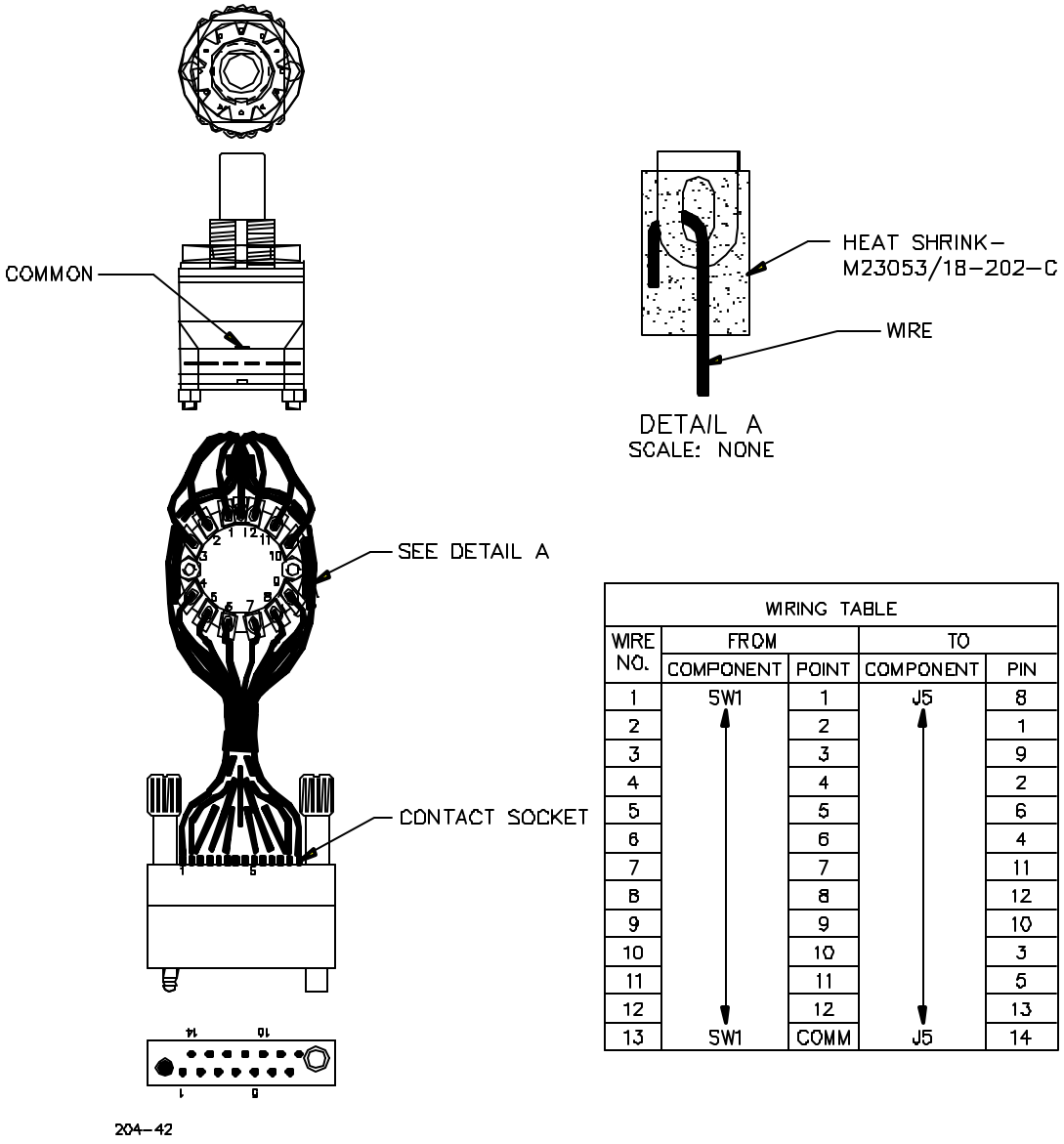

WIRING TABLE				
WIRE NO.	FROM		TO	
	COMPONENT	POINT	COMPONENT	PIN
1	SW1	1	J5	8
2		2		1
3		3		9
4		4		2
5		5		6
6		6		4
7		7		11
8		8		12
9		9		10
10		10		3
11		11		5
12		12		13
13	SW1	COMM	J5	14

Figure H-13. Switch Assembly, AY20412557

H.7.7 Fault Isolation

a. Perform continuity test using digital multimeter or any other standard continuity test equipment. The test shall be performed according to Table H-13.

Table H-13. Switch Assembly, Continuity Test

From Switch Contact Number:	To Connector Pin Number:	Maximum Resistance
1	8	0.5Ω
2	1	0.5Ω
3	9	0.5Ω
4	2	0.5Ω
5	6	0.5Ω
6	4	0.5Ω
7	11	0.5Ω
8	12	0.5Ω
9	10	0.5Ω
10	3	0.5Ω
11	5	0.5Ω
12	13	0.5Ω
COMMON	14	0.5Ω

b. If continuity tests failed, replace faulty wires.

SECTION V

MCA - MVS CABLE, P/N WA20410634

H.8 MCA - MVS CABLE, P/N WA20410634

H.8.1 General

The following paragraphs provide repair procedures and maintenance information for the MCA-MVS Cable assembly, P/N WA20410634

H.8.2 Test Equipment and Special Tools Required

The test equipment and special tools listed in Table H-14 shall be used for testing and repairing the MCA-MVS Cable assembly. Each commercially available item of test equipment can be replaced by equivalent to that listed.

Table H-14. Test Equipment and Special Tools

Nomenclature	Part/Spec. No.	Chapter H.7 Figure H-42 Item No.
Digital Multimeter	Hewlett Packard, Model 3478A	7
Heat Gun	Master Mite, model 10008	1
Belt Wrench	Bertsch Co. No. 1, Model 31335	2
Crimping Tool	M22520/2-01	8
Contact Positioner	M22520/2-09 (for P2 - D38999/26WC35SN)	11
Contact Positioner	M22520/2-02 (for P1 – MS3476W12-10P)	9
Insertion/Extraction Tool	M81969/14-11 (for P1 – MS3476W12-10P)	13
Insertion/Extraction Tool	M81969/14-01 (for P2 - D38999/26WC35SN)	12
Electronic Equipment Tool Kit	PPL863	15

H.8.3 Material Required

Repair materials and other consumable items required are listed in Table H-15.

Table H-15. Material Required

Nomenclature	Pars/Spec No.	Appendix F Item No.
Sealing Compound	MIL-S-22473 Grade-AA, 290	20
Primer	MIL-S-22473 Grade-T, 747	17
Adhesive	S1125	2
Conductive Adhesive	S1184	3
Solder wire	SN63WRMAP3-0.6MM	23

H.8.4 General Repair Requirements

Refer to Figure H-14.

Repair or replace cable connectors as follows:

NOTE

The following procedure applies to P1 and P2.

a. Remove dust cap (1/14) from connector (2/13).

b. Remove screw (3), washers (7/8/10), and nut (6), securing clamp (12) and dust cap (1/14) to cable (5)

CAUTION

Using excess force when cutting boot may cause damage to wires.

c. Using sharp knife, carefully cut boot (4) from end to end.

d. Remove boot off back shell (3) and cable (5).

e. Using connector pliers (soft jaw), loosen back shell (3) from connector (2).

f. Tag and label wires.

g. Using extraction tool, extract damaged pins from connector. Extract serviceable pins to facilitate installation of a new boot.

h. Remove connector (2) from cable (5).

i. Move back shell (3) away from end of cable.

j. Cut wire as close as possible to damaged pin.

k. Strip insulation from wire as required.

l. Using crimping tool, crimp pin to wire.

m. Slide new boot (4) on cable (5).

n. Using insertion tool, insert pins into connector IAW Figure H-15.

o. Perform continuity test IAW Para H.2.5.6. if test succeeded continue the procedure.

p. Using wire brush, clean sealing compound residue from threads of connector body and back shell.

q. Apply primer to threads of connector body (2) and back shell (3).

r. Apply sealing compound to threads of connector body (2) and back shell (3).

s. Shield should be fold over the back shell (3), for electrical connection.

t. Screw back shell (3) to connector (2) and torque to 5N/m.

u. Apply adhesive S1184 to inside of boot (4), for bonding to cable shield and back shell (3).

v. Apply adhesive S1125 outside boot (4), for bonding to cable jacket and back shell (3).

w. Place boot (4) on back shell (3)

x. Using heat gun, apply heat uniformly to boot (4), until boot shrinks to form secure seal around back shell and cable.

y. Secure clamp (12) and dust cap (1/14) to cable (5) using screw (11), washers (7/8/10) and nut (6).

z. Secure dust cap (1/14) to connector (2/13).

H.8.5 Inspection

Inspect MCA-MVS cable as follows:

a. Inspect all parts for damage, wear and deterioration.

b. Inspect connectors for broken, bend, loose, damaged or missing pins.

c. Inspect all wiring for bent or broken leads. For cracked, over heat or burned insulators and security of attachment.

H.8.6 Continuity Test

Refer to Table H-16.

Check wiring continuity as follows:

a. Using Multimeter, measure resistance between P1 pins and P2 pins IAW Table H-16.

b. Measure resistance between each pin and adjacent pins. Resistance should be infinite.

c. If incorrect measure detected, repair wire or connector.

Table H-16. MCA-MVS Cable, Continuity Test

From	To	Maximum Resistance
P2 – 1	P1 – J	0.5Ω
P2 - 2	P1 – B	0.5Ω
P2 – 3	P1 – A	0.5Ω
P2 – 4	P1 – K	0.5Ω
P2 - 7	P1 – C	0.5Ω
P2 - 8	P1 - H	0.5Ω

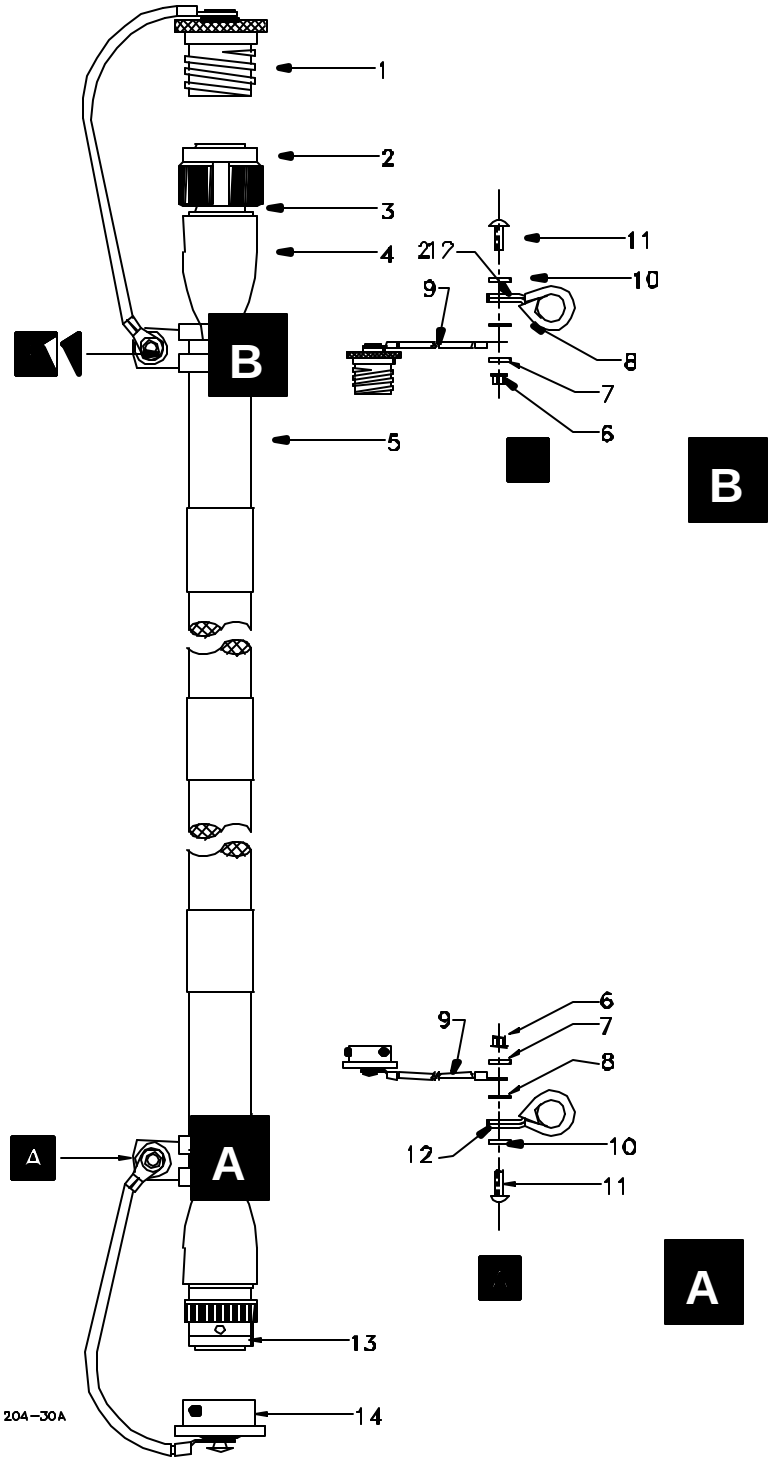

Figure H-14. MCA-MVS Cable, Repairing

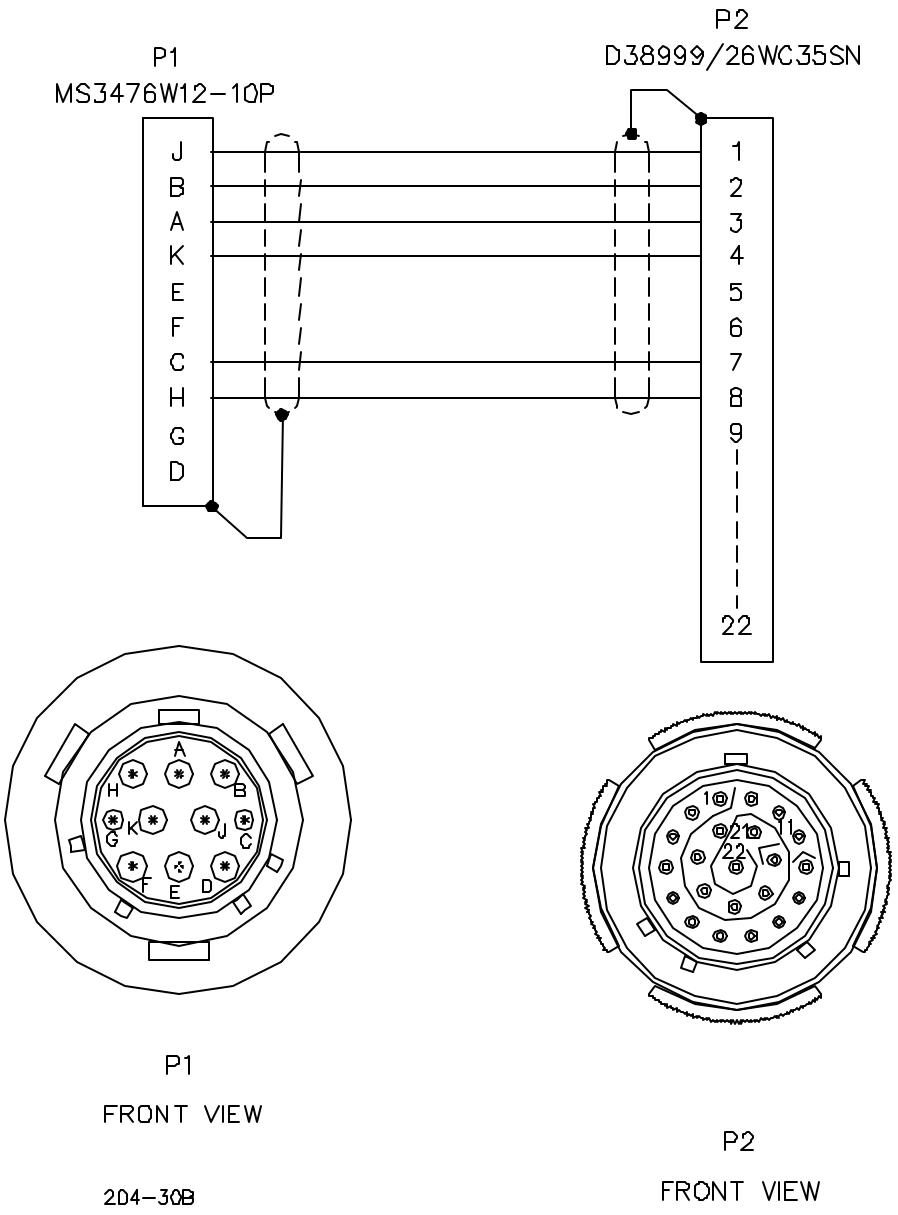

Figure H-15. MCA-MVS Cable, Wiring Diagram and Pin Location

SECTION VI

MCA CCA CABLE, P/N WA20412122

H.9 SECTION VII. MCA CCA CABLE, P/N WA20412122

H.9.1 General

The following paragraphs provide repair procedures and maintenance information for the MCA-CCA Cable assembly, P/N WA20412122

H.9.2 Test Equipment and Special Tools Required

The test equipment and special tools listed in Table H-17 shall be used for testing and repairing the MCA-CCA Cable assembly. Each commercially available item of test equipment can be replaced by equivalent to that listed.

Table H-17. Test Equipment and Special Tools

Nomenclature	Part/Spec. No.	Chapter H.7 Figure H-42 Item No.
Digital Multimeter	Hewlett Packard, Model 3478A	7
Heat Gun	Master Mite, model 10008	1
Belt wrench	Bertsch Co. No. 1, Model 31335	2
Crimping Tool	M22520/2-01	8
Contact Positioner	M22520/2-02	9
Insertion/Extraction Tool	M81969/14-11	13
Electronic Equipment Tool Kit	PPL863	15

H.9.3 Material Required

Repair materials and other consumable items required are listed in Table H-18.

Table H-18. Material Required

Nomenclature	Pars/Spec No.	Appendix F, Item No.
Sealing Compound	MIL-S-22473 Grade-CV, ML-116	
Primer	MIL-S-22473 Grade-T, 747	17
Adhesive	S1125	2
Solder Wire	SN63WRMAP3-0.6MM	23

H.9.4 General Repair Requirements (Refer to Figure H-16)

Repair or replace cable connectors as follows:

NOTE

The following procedure applies to P1 and P2.

a. Remove dust cap (6) from connector (1).

b. Remove clip securing dust cap (6) to boot (3)

CAUTION

Avoid using excess force when cutting boot as this may cause damage to wires.

c. Using sharp knife, carefully cut boot (3) from end to end.

d. Remove boot (3) from back shell (2) and cable (4).

e. Using connector pliers (soft jaw), loosen back shell (2) from connector (1).

f. Tag and label wires.

g. Using extraction tool, extract damaged pins from connector (1) Also extract serviceable pins to facilitate installation of a new boot (3).

h. Remove connector (1) from cable.

i. Slide back shell (2) away from end of cable.

j. Cut wire as close as possible to damaged pin.

k. Strip insulation from wire as required.

l. Using crimping tool, crimp pins to wires.

m. Slide new boot on cable (4).

n. Using insertion tool, insert pins into connector IAW figure H-17.

o. Perform continuity test IAW Para. H.2.6.6. If test succeeded continue the procedure.

p. Using wire brush, clean sealing compound residue from threads of connector body (1) and back shell (2).

q. Apply primer to threads of connector body (1) and back shell (2).

r. Apply sealing compound to threads of connector body (1) and back shell (2).

s. Shield must be fold over the back shell, for electrical connection.

t. Screw back shell (2) to connector (1) and torque to 5N/m.

u. Apply adhesive S1125 to boot (3), for bonding to cable jacket and back shell (2).

v. Slide boot (3) on back shell (2).

w. Using heat gun, apply heat uniformly until boot (3) shrinks to form secure seal around back shell (2) and cable (4).

x. Install clip (5) with dust cap (6) attached, on boot (3).

y. Secure dust cap (6) to connector (1).

H.9.5 Inspection

Inspect MCA-CCA cable as follows:

a. Inspect all parts for damage, wear and deterioration.

b. Inspect connectors for broken, bent, loose, damaged or missing pins.

c. Inspect all wiring for bent or broken leads. For cracked, over heated or burned insulators and security of attachment.

H.9.6 Continuity Test

Check wiring continuity as follows:

a. Using Multimeter, measure resistance between P1 pins and P2 pins IAW Table H-19.

b. Measure resistance between each pin and adjacent pins. Resistance should be infinite.

c. If incorrect measurement is detected, repair wire or connector.

Table H-19. MCA-CCA Cable, Continuity Test

From	To	Maximum Resistance
P2 – A	P1 – J	0.5Ω
P2 – B	P1 – B	0.5Ω
P2 – C	P1 – A	0.5Ω
P2 – D	P1 – K	0.5Ω
P2 – E	P1 – C	0.5Ω
P2 - F	P1 - H	0.5Ω
P2 – G	P1 – A	0.5Ω
P2 – H	P1 – K	0.5Ω
P2 – J	P1 – C	0.5Ω
P2 – K	P1 - H	0.5Ω
P2 – L	P1 – A	0.5Ω
P2 – M	P1 – K	0.5Ω
P2 – N	P1 – C	0.5Ω
P2 - P	P1 - H	0.5Ω
P2 – R	P1 - H	0.5Ω
P2 – S	P1 - H	0.5Ω
P2 - T	P1 - H	0.5Ω
P2 – U	P1 - H	0.5Ω
P2 - V	P1 - H	0.5Ω

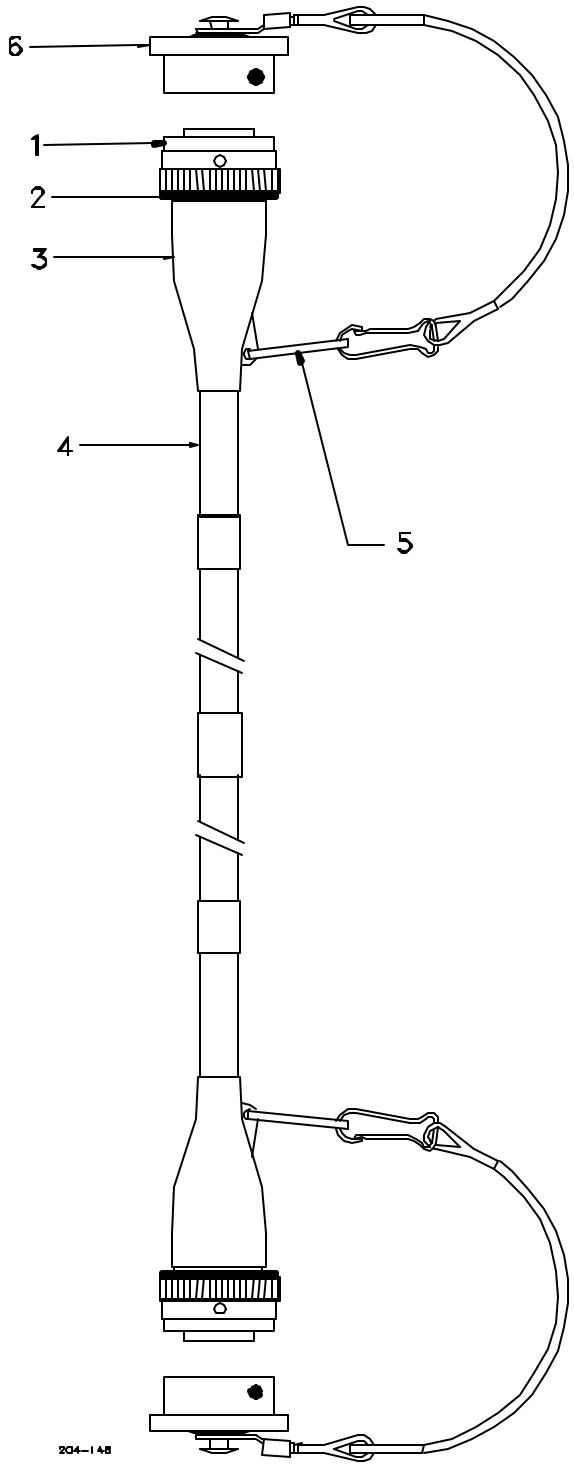

Figure H-16. MCA-CCA Cable, Repairing

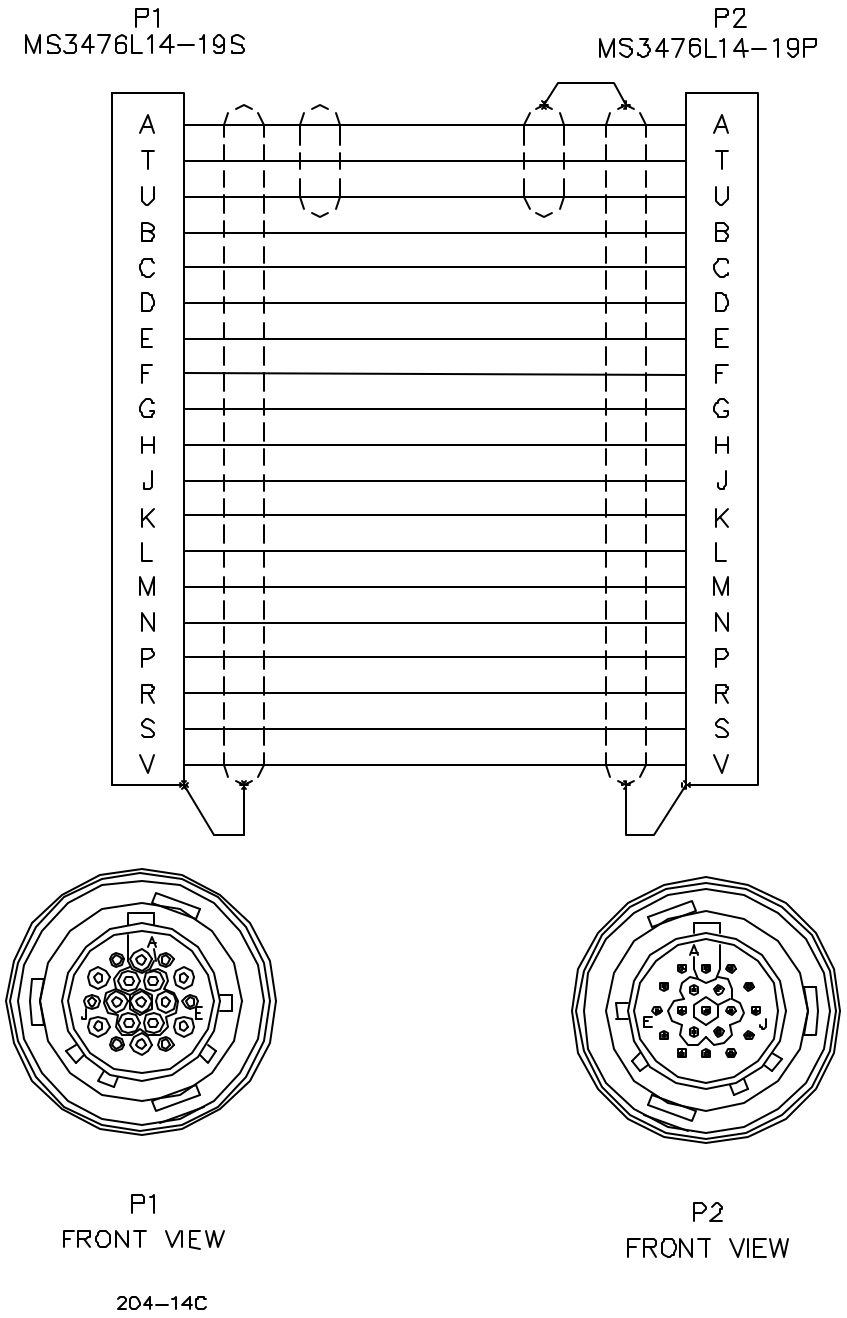

Figure H-17. MCA-CCA Cable, Wiring Diagram and Pin Location

CHAPTER 3

DATA BASE EDITOR

CHAPTER CONTENT

PAGE

CHAPTER 3 DATA BASE EDITOR H-53
H.10 DATA BASE EDITOR H-53
H.10.1 GENERAL H-53
H.10.2 APPLICABLE DOCUMENTS H-54
H.10.3 OPERATING INSTRUCTIONS H-54

H-10 DATA BASE EDITOR

H-10.1 General

H-10.1.1 Purpose

The purpose of the Editing program is to edit and view the ammunition correlation Tables database stored in the MCA.

These Tables correlate between the BCS and the M94 Firing Tables (FCI).

The MCA Editor is a utility program that runs on a PC compatible computer, under the Windows 95 operating system.

H-10.1.2 Capabilities

H.10.1.2.1 View

The program opens the HEX file that consists of both the MCA program and the MCA database for viewing. It is possible to browse through the database and view its details as follows:

a. Howitzer Model Correlation.
b. Projectile (BCS Mnemonic) Correlation for weapon caliber of 105mm, 155mm and 203mm.
c. Projectile (BCS Mnemonic) Correlation for weapon caliber of 105mm, 155mm and 203mm.
d. Projectile Head of Family correlation for weapon caliber of 105mm, 155mm and 203mm.
e. Propellant Model Correlation for weapon caliber of 105mm, 155mm and 203mm.
f. Charge Correlation.
g. Fuze Correlation (GDU Value).
h. Fuze Correlation (MVS Value).

H.10.1.2.2 Edit

Editing the data displayed on the screen and create an updated HEX file that can be download to the MCA, using the MCA communications program: PF67012427.

H.10.1.2.3 Print

Prints the database on a standard printer.

H.10.2 Applicable Documents

a. PF20410906 - MCA software – HEX file.

b. PF67012427 - MCA communications program.

c. PF67012425 - M94 FCI Database editor.

FSS-SS-0002-IRS

Interface Requirements Specification for the Battery Computer System/Velocimeter Interface.

H.10.3 Operating Instructions

H.10.3.1 General

The program is based and runs under the Windows 95 operating system therefore it inherits many Win95 standard functions such as mouse and keyboard movements, icons for operations, open and save file dialogues and so on. It is assumed that the operator is familiar with these functions therefore it will not be covered in this manual.

Before running the program, be sure you have the last version of the operational MCA software (HEX file).

Before editing or adding an MCA item, use the FCI Database Editor to verify that the MCA item is included in the M94 database.

H.10.3.2 Running the Program

Run the MCA Edit program, by simply double clicking on the program icon.
The following screen will appear.

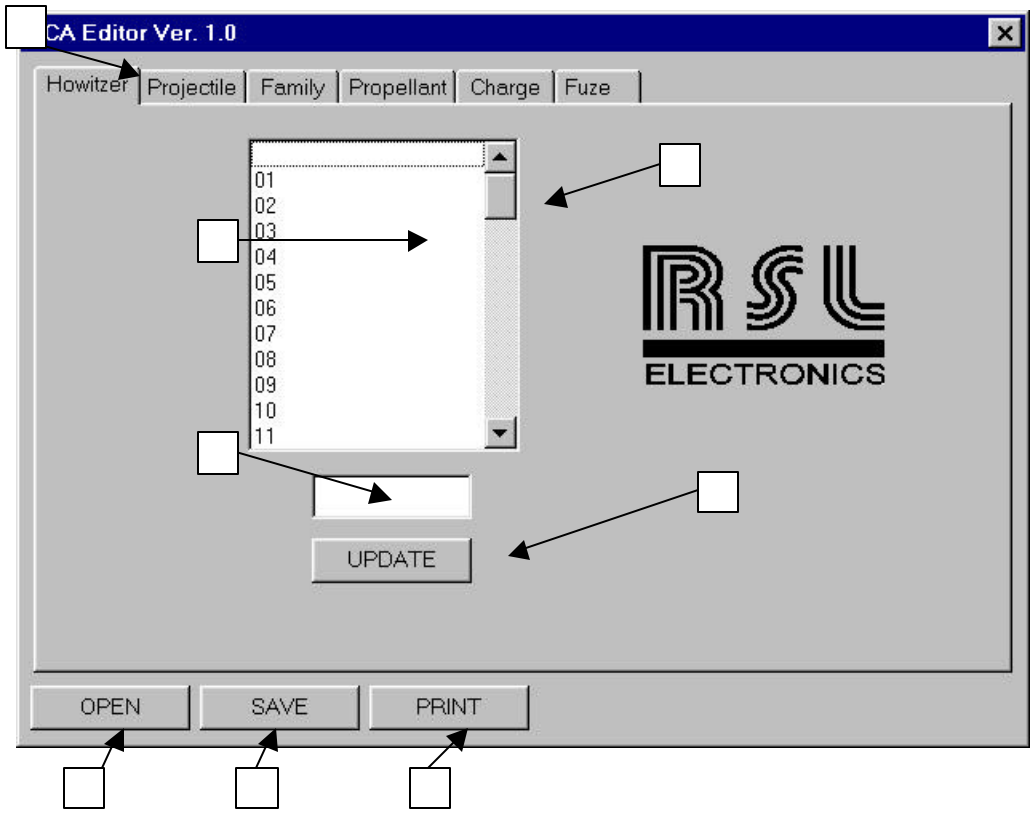

INDEX	DESCRIPTION
1	PAGE SELECTION: SELECTS THE CORRELATION TABLE TO BE DISPLAYED IN THE VIEW LIST BOX (2)
2	VIEW LIST BOX: THE DATABASE IS BEING DISPLAYED HERE
3	EDIT BOX: A PLACE TO ADD, REMOVE OR CHANGE A DATABASE ITEM.
4	UPDATE BUTTON: UPDATES THE DATABASE WITH THE EDITED ITEM
5	OPEN BUTTON: OPENS A HEX FILE FOR DATABASE BROWSING OR EDITING.
6	SAVE BUTTON: SAVES THE EDITED DATABASE TO THE SELECTED HEX FILE
7	PRINT BUTTON: PRINTS THE DATABASE ON A STANDARD PRINTER

Figure H-18. MCA Editor, Opening Screen

H.10.3.3 Open a HEX File

Press the OPEN button (5) and the “Open” screen appears.

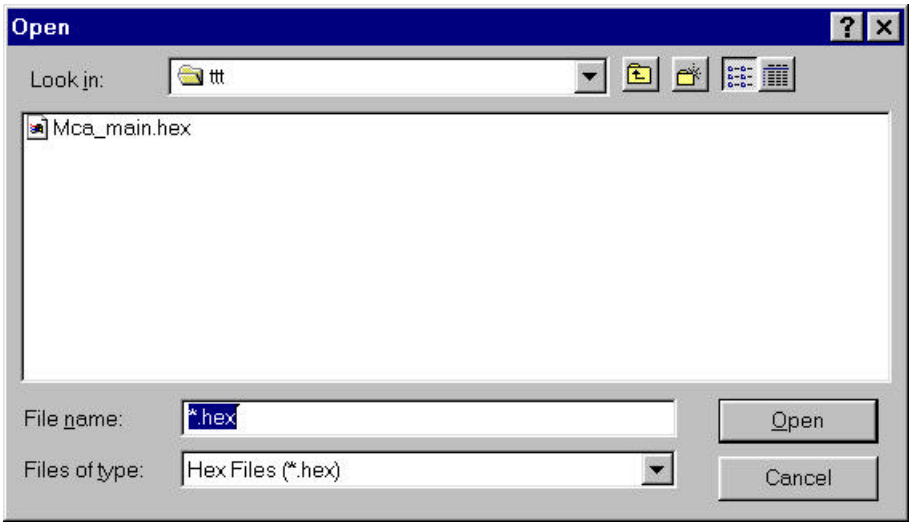

Figure H-19. Open a HEX file

A list of directories and files will be displayed inside the “Open” screen.

Select the MCA HEX file (Mca_main.hex in the example above), and press the “Open” button.

This action extracts the database from the HEX file and displays it on the screen.

The Howitzer Model Correlation are the first to appear on the screen.

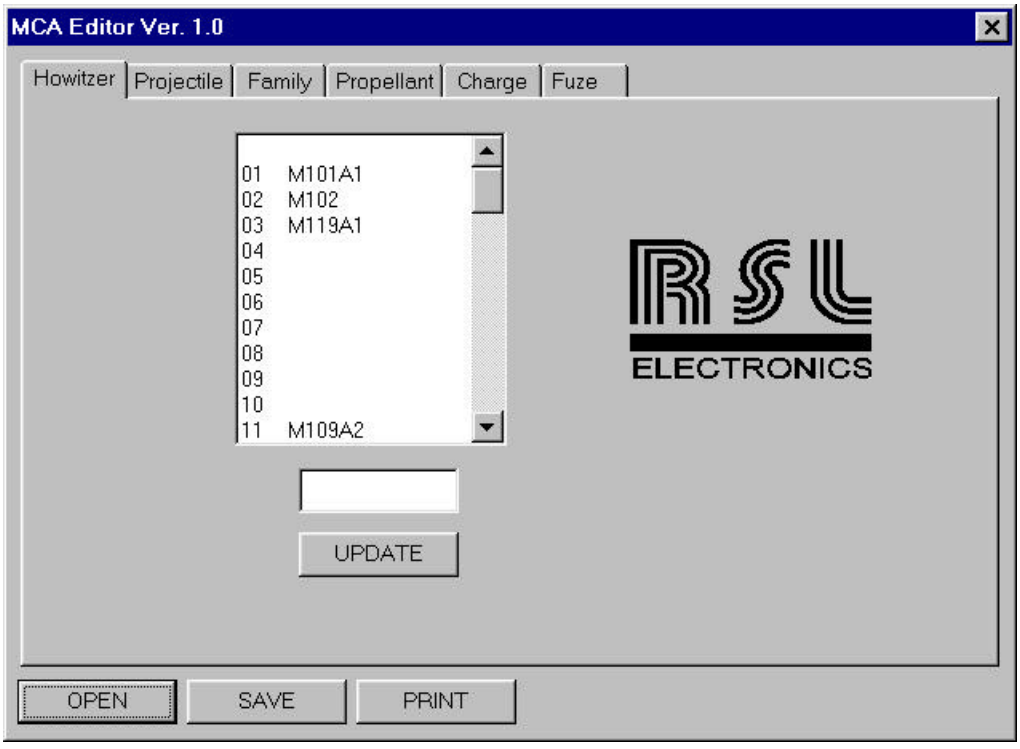

Figure H-20. Howitzer Model

In the database shown above: Howitzer Model M109A2 is the MVS Howitzer description that correlates to Integer Byte Value of 11.

H.10.3.4 Browse the Database

H.10.3.4.1 Howitzer Model Correlation

On each view you can use the Scrolling Bar (8) or scrolling arrows of the View List Box (2) to see the full extent of the particular correlation Table.

Each Integer Byte Value (1 to 63) correlates to a Howitzer Model (up to 7 ASCII characters) according to the Howitzer Model Correlations Table of the IRS.

Integer values are grouped according to Gun Caliber in the following manner:

a. 1 – 10: 105mm

b. 11 – 22: 155mm

c. 21 - 63: 203mm

NOTE

The Howitzer Model displayed in the Table above is the Howitzer Model description extracted from the MCA database. It should be the same as that of the M94 database.

When editing an existing Howitzer Model or adding a new one, use the following 3 steps method:

a. Use the Howitzer Model Correlation Table of the IRS in order to find its Integer Byte Value or to set a new combination of Integer Byte Value – BCS Howitzer Model description.

b. Use the M94 FCI Database Editor to find the MVS Howitzer Model description, to edit an existing item or to add a new one.

c. The BCS Howitzer Model description is not necessarily the same as that of the MVS. Consult professional staff if necessary to solve any discrepancy between these two.

d. Use the MCA Editor to edit an existing item or to add a new one as will be explained in the next paragraph.

H.10.3.5 Projectile Correlation

Press the “Projectile” button to view the Projectile Correlation.

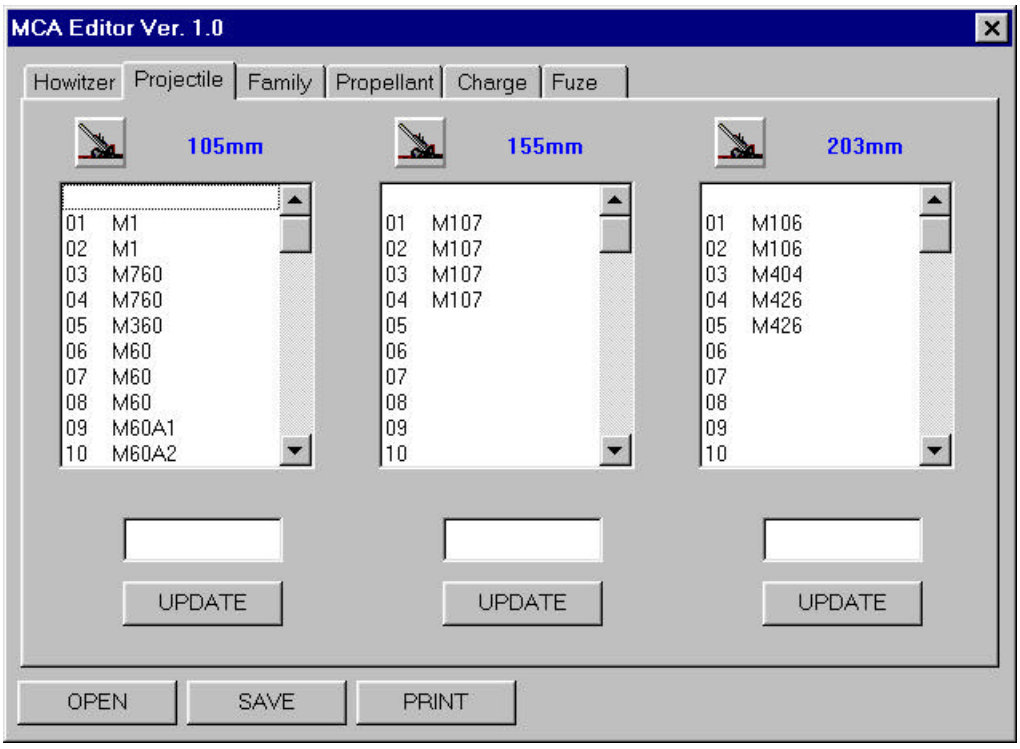

Figure H-21. Projectile Correlation

Each Integer Byte Value (1 to 63) correlates to a Projectile (BCS Mnemonic) for weapon calibers 105mm, 155mm and 203mm. (up to 6 ASCII characters for each caliber) according to the Projectile Correlations Table of the IRS.

NOTE

The Projectile displayed in the Table above, is the Projectile description extracted from the MCA database. It should be the same as that of the M94 database.

When editing an existing Projectile or adding a new one, use the following 3 steps method:

a. Use the Projectile Correlations Table of the IRS in order to find its Integer Byte Value or to set a new combination of Integer Byte Value – BCS Projectile description.

b. Use the M94 FCI Database Editor to find the MVS Projectile description, to edit an existing item or to add a new one.
The BCS Projectile description is not necessarily the same as that of the MVS. Consult professional staff if necessary to solve any discrepancy between these two.

c. Use the MCA Editor to edit an existing item or to add a new one as will be explained in the next paragraph.

In the database shown above: Projectile M60A2 for weapon caliber of 105mm
is the MVS Projectile description that correlates to Integer Byte Value of 10. The BCS Projectile description that correlates to Integer Byte Value of 10 according to the Projectile Correlations Table of the IRS is M60A2/WP.

H.10.3.5.1 Projectile Head of Family

Press the “Family” button to view the Projectile Head of Family Correlation.

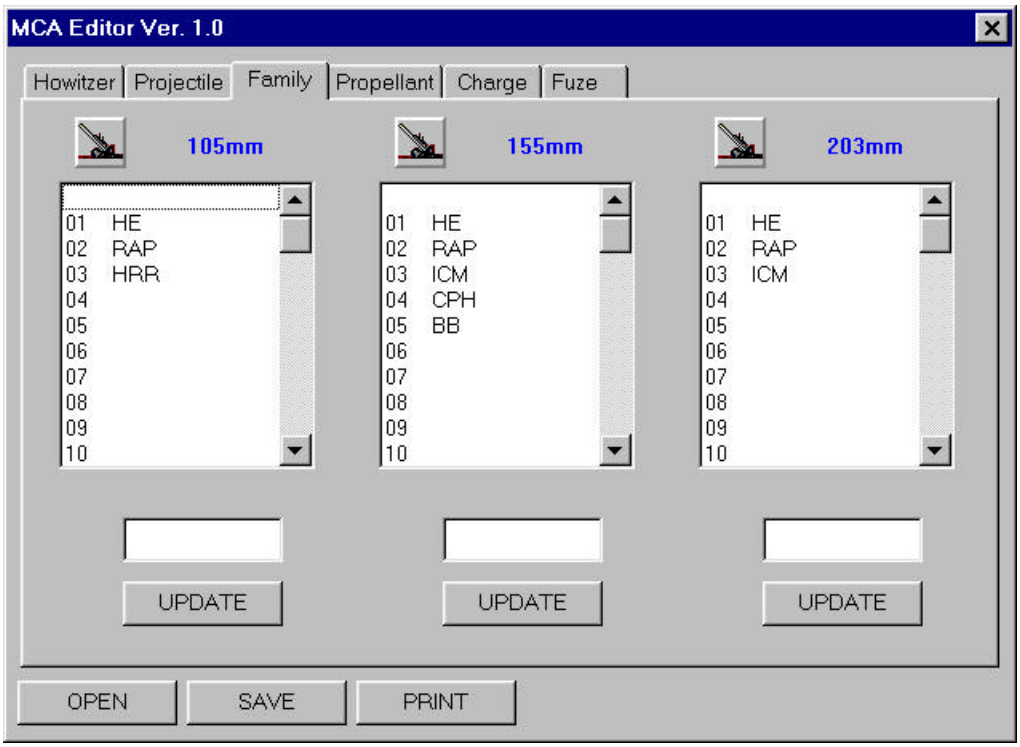

Figure H-22. Projectile Head of Family

Each Integer Byte Value (1 to 63) correlates to a Projectile Head of Family for weapon calibers 105mm, 155mm and 203mm. (up to 3 ASCII characters for each caliber) according to the Projectile Head of Family Correlations Table of the IRS.

NOTE

The Projectile Head of Family displayed in the Table above, is the Projectile Head of Family description extracted from the MCA database. It should be the same as that of the M94 database.

When editing an existing Projectile Head of Family or adding a new one, use the following 3 steps method:

a. Use the Projectile Head of Family Correlations Table of the IRS in order to find its Integer Byte Value or to set a new combination of Integer Byte Value – BCS Projectile Head of Family description.

b. Use the M94 FCI Database Editor to find the MVS Projectile Head of

c. Family description, to edit an existing item or to add a new one.
The BCS Projectile Head of Family description is not necessarily the same as that of the MVS. Consult professional staff if necessary to solve any discrepancy between these two.

d. Use the MCA Editor to edit an existing item or to add a new one as will be explained in the next paragraph.

In the database shown above: Projectile Head of Family ICM for weapon caliber of 155mm is MVS

Projectile Head of Family that correlates to Integer Byte Value of 03.

H.10.3.5.2 Propellant Model

Press the “Propellant” button to view the Propellant Model Correlation.

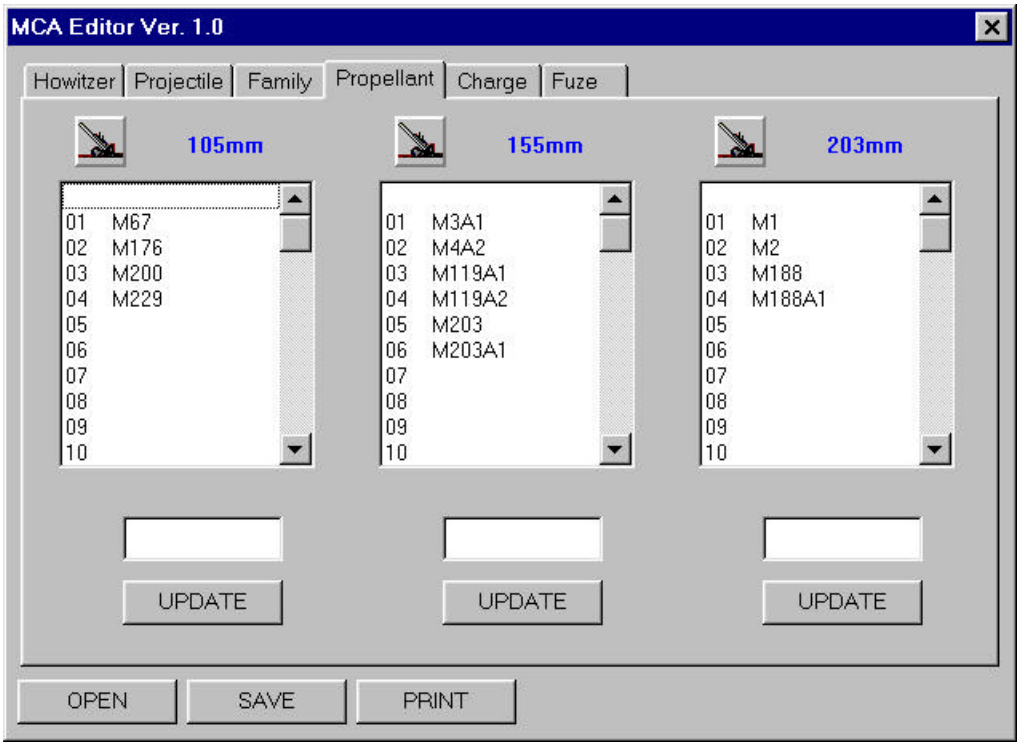

Figure H-23. Propellant Correlations Are Being Displayed.

Each Integer Byte Value (1 to 63) correlates to a Propellant Model for weapon calibers 105mm, 155mm and 203mm. (up to 6 ASCII characters for each caliber) according to the Propellant Model Correlations Table of the IRS.

NOTE

The Propellant displayed in the Table above, is the Propellant description extracted from the MCA database. It should be the same as that of the M94 database.

When editing an existing Propellant or adding a new one, use the following 3 steps method:

a. Use the Propellant Correlations Table of the IRS in order to find its Integer Byte Value or to set a new combination of Integer Byte Value – BCS Propellant description.

b. Use the M94 FCI Database Editor to find the MVS Propellant description, to edit an existing item or to add a new one.
The BCS Propellant description is not necessarily the same as that of the MVS. Consult professional staff if necessary to solve any discrepancy between these two.

c. Use the MCA Editor to edit an existing item or to add a new one as will be explained in the next paragraph.

In the database shown above: Propellant Model M188A1 for weapon caliber of 203mm is the Propellant Model that correlates to Integer Byte Value of 04.

H.10.3.5.3 Charge

Press the “Charge” button to view the Charge Correlations.

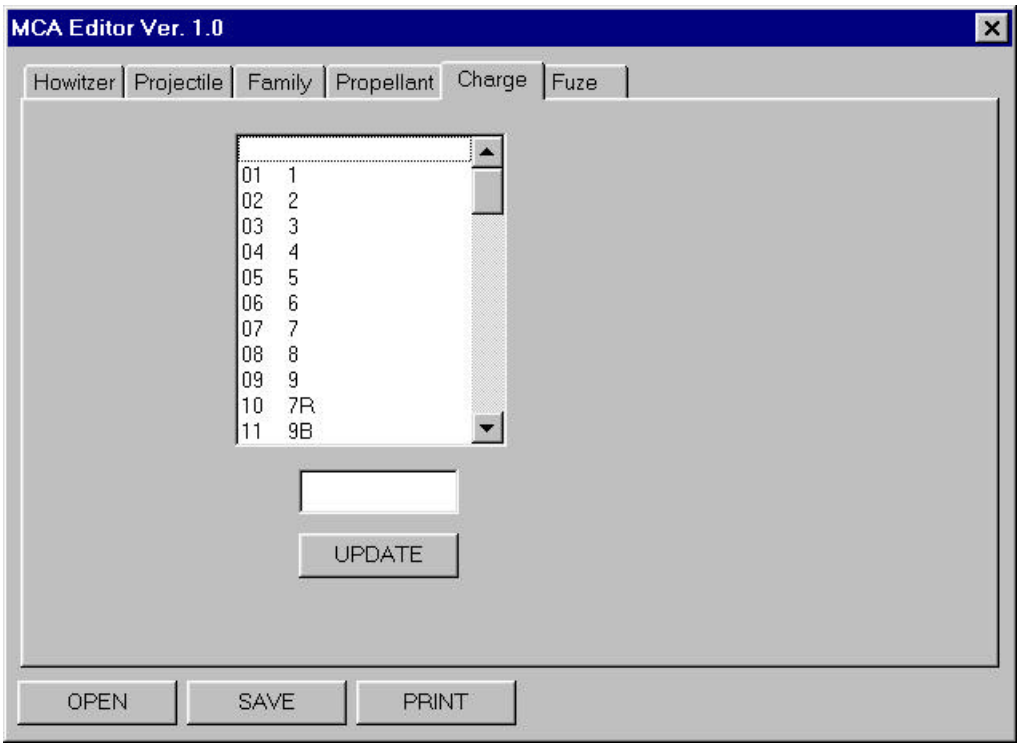

Figure H-24. Charge

Each Integer Byte Value (1 to 63) correlates to a Charge (one ASCII character) according to the Charge Correlation Table of the IRS.

In the database shown above: Charge 9 correlates to Integer Byte Value of 09. Charges 7R, 9B, 8R and 8S are special case charges and can not be edited.

H.10.3.5.4 Fuze

Press the “Fuze” button to view the Fuze Correlation

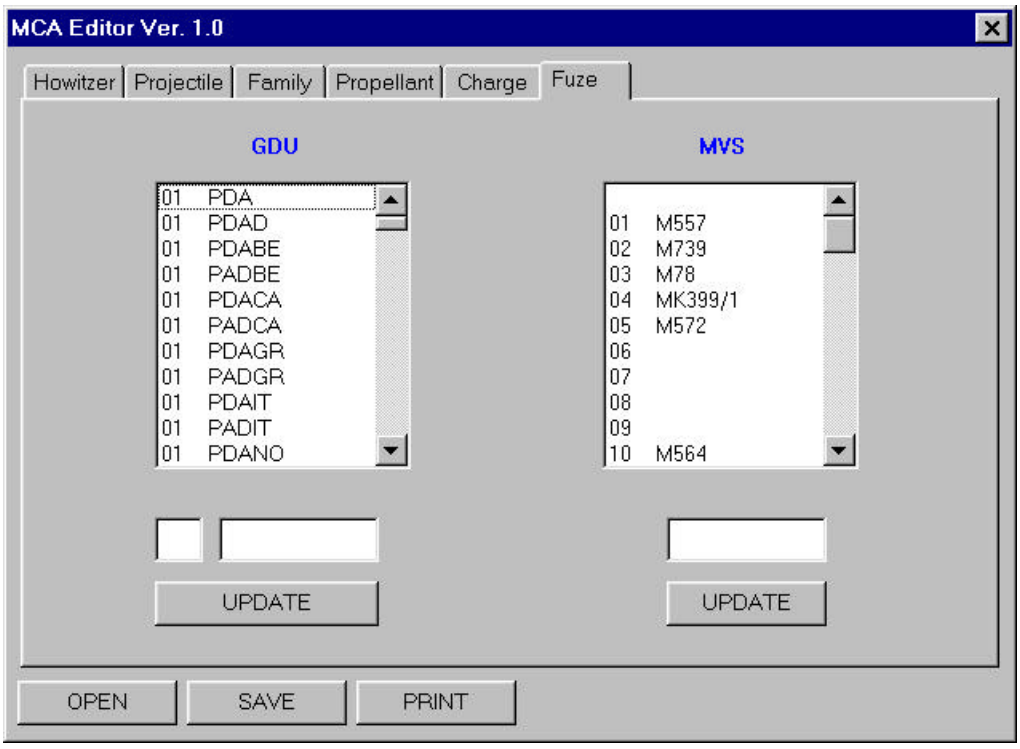

Figure H-25. Fuze

Each Integer Byte Value (1 to 63) correlates to a GDU Value (up to 5 ASCII characters) and an MVS Value (up to 7 ASCII characters) according to the Fuze Correlations Table of the IRS.

NOTE

The Fuze displayed in the left Table (GDU), is the GDU Fuze description. The Fuze displayed in the right Table (MVS) is the MVS Fuze description. The GDU Fuze description and the MVS Fuze description were both extracted from the MCA database. The Integer Byte Value links between the two Tables. There could be more then one GDU Fuze descriptions that correlate to an MVS Fuze description (up to 169 total GDU Fuze entries).

When editing an existing Fuze or adding a new one, use the following 3 steps method:

a. Use the GDU Fuze Correlations Table of the IRS in order to find its Integer Byte Value or to set a new combination of Integer Byte Value – GDU Fuze description.

b. Use the M94 FCI Database Editor to find the MVS GDU description, to edit an existing item or to add a new one.
The GDU Fuze description is not necessarily the same as that of the MVS. Consult professional staff if necessary to solve any discrepancy between these two.

c. Use the MCA Editor to edit an existing item or to add a new one as will be explained in the next paragraph.

In the database shown above: Fuze PDACA (GDU Value) correlates to Integer Byte Value of 01, which correlates to Fuze M557 (MVS Value).

H.10.3.6 Edit the Database

Click the item that you want to edit. The item will be displayed inside the Edit Box (3).

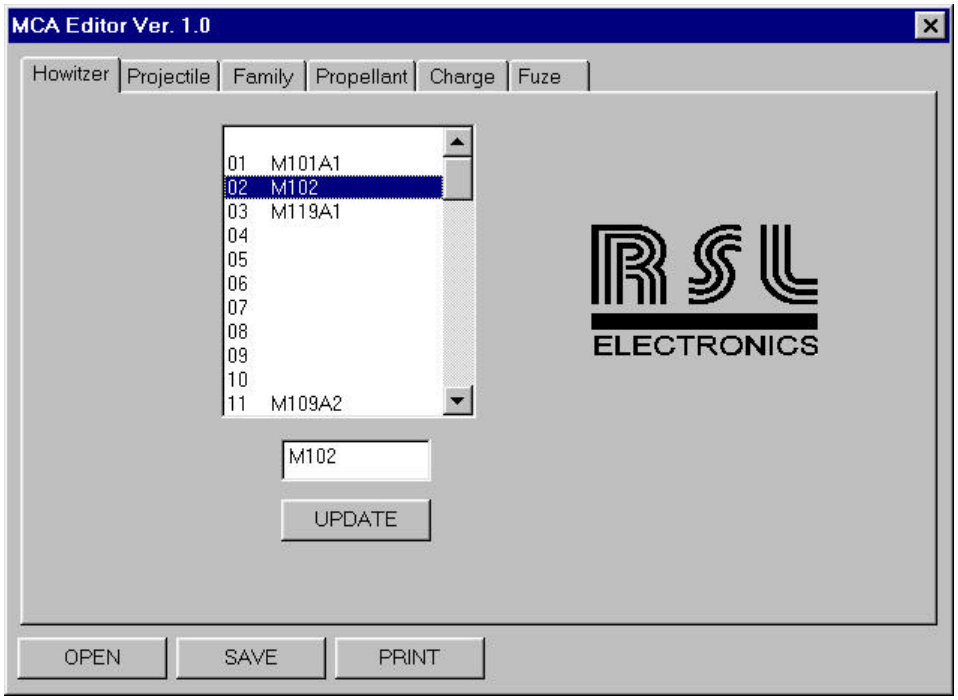

Figure H-26. Display the Howitzer Model M102 Inside the Edit Box.

Edit the item being displayed inside the Edit Box (2) and then press the UPDATE button (4). The updated item will be displayed in the View List Box (2) instead of the old item.

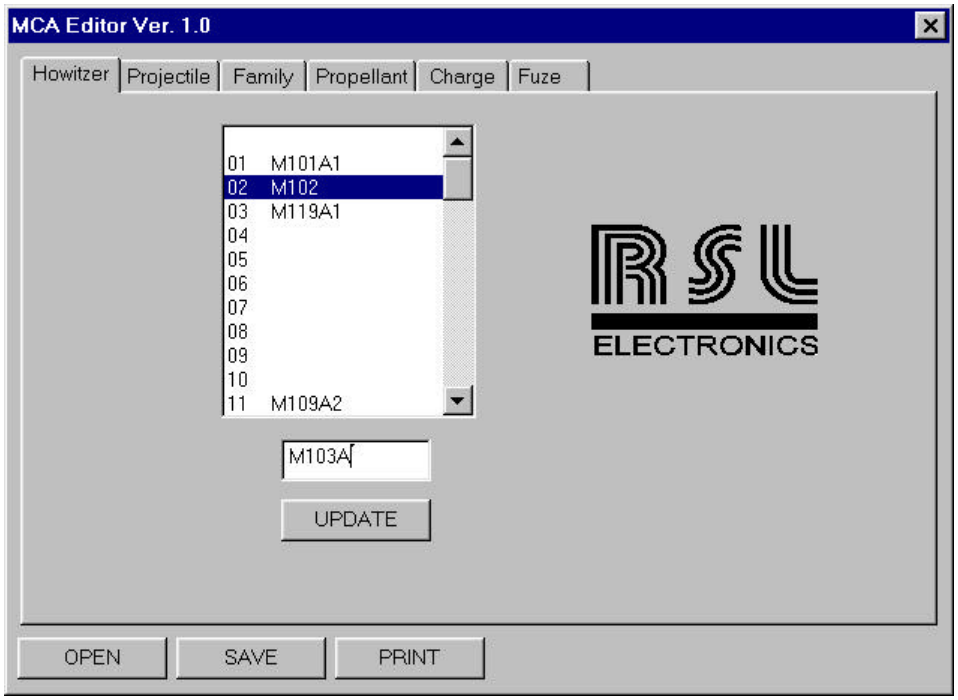

Figure H-27. Update Button

By pressing the UPDATE button (4), the M103A in the Edit Box (2) replaces the M102 in the View List Box (2).

NOTE

If you've made a mistake and don't want to update the new item, just don't press the UPDATE button (4).

In the Charge screen - Charges 7R, 9B, 8R and 8S are special case charges and can not be edited.

If you try to edit one of these charges you will get the following message:

Figure H-28. Special Unedited Charge Message

NOTE

When editing the Fuze (GDU Value), it is possible to edit also the Integer Byte Value of the corresponding Fuze, because each MVS Value correlates to many GDU Values.

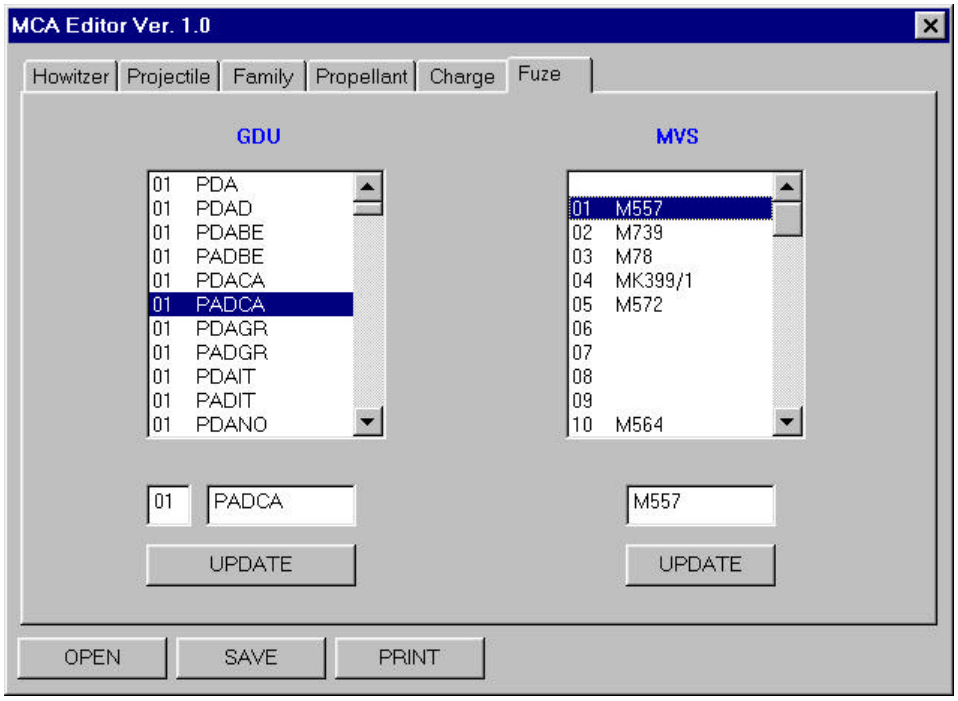

Figure H-29. Fuse PADCA

Edit the Fuze PADCA (GDU Value) and it's correlated Integer Byte (01)

H.10.3.7 Save to HEX File

Press the SAVE button (6) and the "Save As" screen appears.

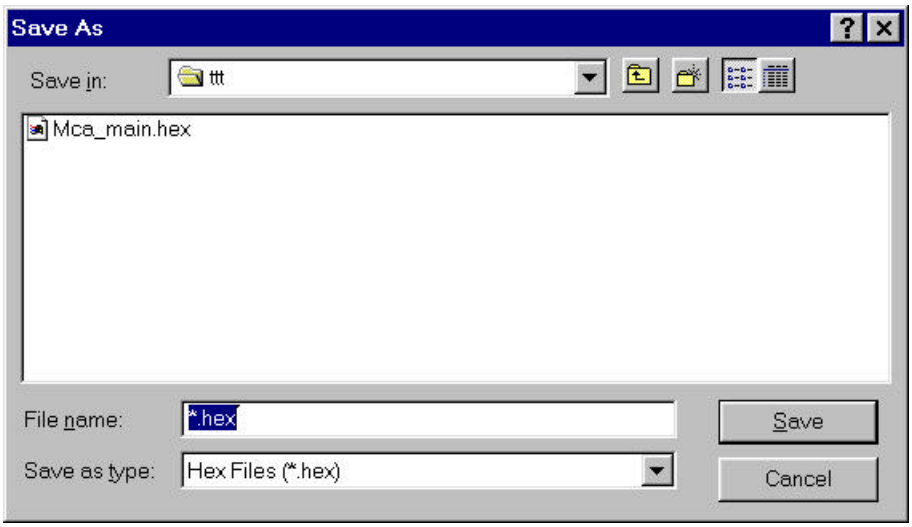

Figure H-30. "Save As" Screen

In the "File name" dialog box, put in the new name of the HEX file or select a HEX file from the list of files displayed in the "Save in" list view.

Press the "Save" button to save the updated database in the new HEX file.

H.10.3.8 Print the Database

Press the PRINT button (7).

A "Print" screen appears with a selection of printing choices.

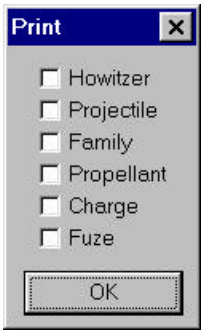

Figure H-31. A "Print" Screen with Selections

Check the boxes to the left of the selected items and press the "OK" button.

The selected correlation Tables will be printed on your default printer.

NOTE

You can always press the small "x" on the upper right side of the displayed screen to exit the program and return to the operating system.

CHAPTER 4

REPROGRAMMING

CHAPTER CONTENTS

PAGE

CHAPTER 4 REPROGRAMMING....H-66
H.11 REPROGRAMMING....H-66
H.11.1 GENERAL....H-66
H.11.2 REPROGRAMMING....H-66

H.11 REPROGRAMMING

H.11.1 General

This Chapter describes procedures required for reprogramming the MCA.

Reprogramming can be performed using the RS232 serial communication link.

Reprogramming of the MCA is authorized at the direct support, general support and depot levels of maintenance.

H.11.2 Reprogramming

H.11.2.1 Required Equipment

Table H-20. Reprogramming Required Equipment

No.	Description	Requirements
1	Computer	IBM PC or IBM compatible.
2	Floppy Disk Drive	3.5 inch, 1.44M
	Serial Port	Configured as COM1.
	MS-DOS	Version 6.2 or higher.
	Programming Software	On diskette RSL P/N: CM20412349
	Software to be Programmed	On diskette RSL P/N: CM20412437 Or any other released version.
	Programming Harness	RSL P/N: WA20413064 – Figure H-32.
8	MCA Unit	Installed on a gun display unit (GDU) system.

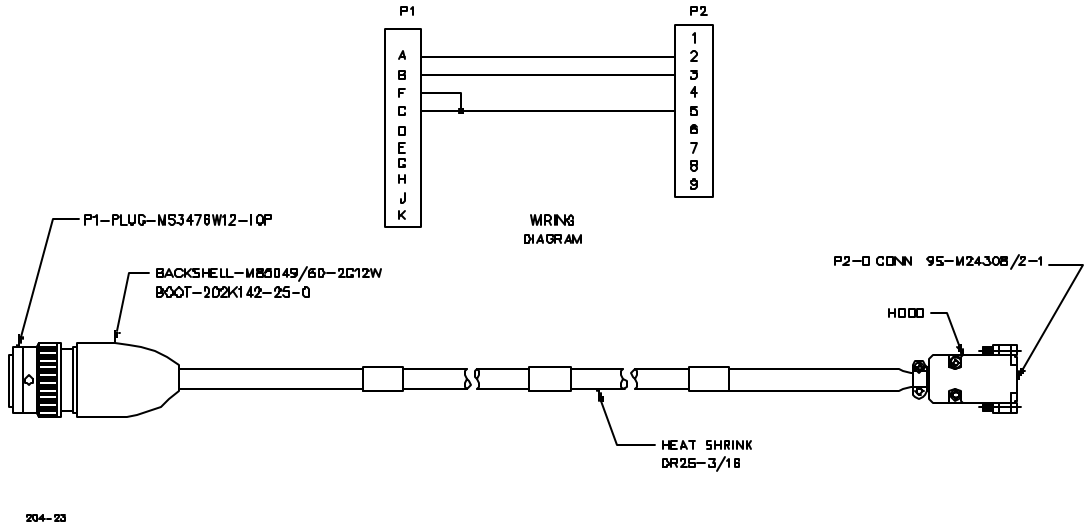

Figure H-32. Programming Cable

H.11.2.2 Reprogramming Set-up

For the following description refer to Figure H-33.

a. Verify that CCA power is off.

b. Verify that the MCA-CCA cable (WA20412122) is connected the same way it is done for normal operation of the system.

c. Disconnect the MCA-MVS cable from MCA J1.

d. Connect the programming cable between the MCA J1 and the PC COM1.

e. Turn ON the PC in DOS mode.

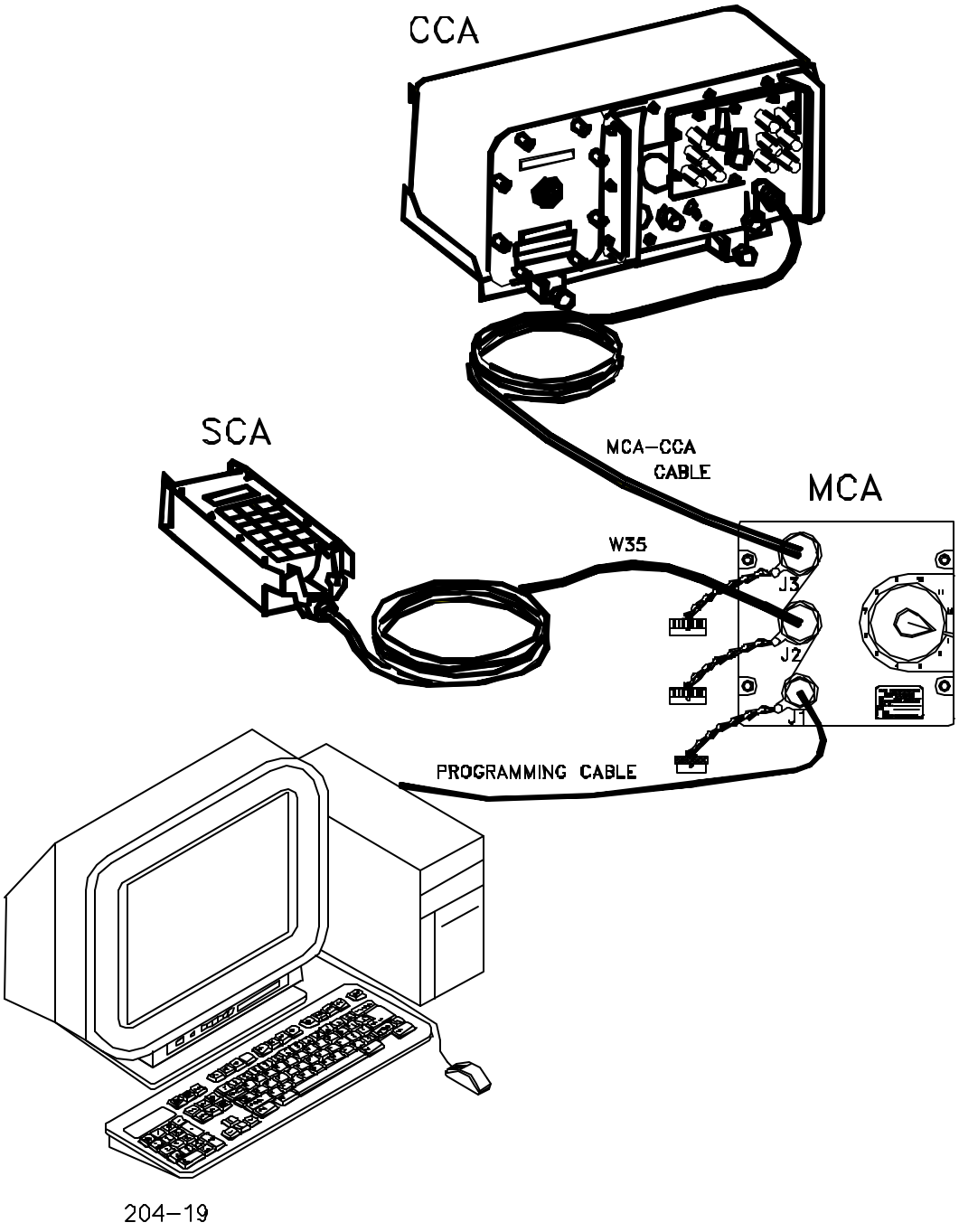

Figure H-33. Reprogramming Set-up

H.11.2.3 Reprogramming Procedure

a. Turn the CCA power switch ON.

NOTE

The power switch should be turned on only after the programming cable has been connected. If you are not sure, recycle power.

b. Run software PCMCA.EXE by typing “PCMCA” and pressing the Enter key.

c. Select the only item in the menu “programming” by pressing the Enter key.

d. In the File Name window type the MCA software name: MCA_MAIN.HEX. Press the Enter key to confirm. the message “converting HEX file” will appear on the lower window For about one minute.

e. After the conversion is finished, the programming process starts Automatically. Verify that the following indications appears on the screen: A progress indicator appears on the upper window. A block number counter appears in the OUTPUT window.

f. If there is an error message on the screen, or one of the above indications doesn’t shows, verify all the connections are as defined And repeat the process.

g. At successful reprogramming the screen will change back to the Initiate one.

h. Press Esc. to exit the program.

i. Turn off the CCA power switch.

j. Disconnect the programming cable.

k. Connect the MCA-MVS cable to MCA J1.

l. End of process.

CHAPTER 5

PREPARATION FOR SHIPMENT AND STORAGE

CHAPTER CONTENT

		PAGE
CHAPTER 5	PREPARATION FOR SHIPMENT AND STORAGE	H-70
H.12	PREPARATION FOR SHIPMENT AND STORAGE	H-70
H.12.1	GENERAL	H-70
H.12.2	PACKING	H-70
H.12.3	SHIPMENT IN CRATES	H-72
H.12.4	STORAGE	H-72

H.12 PREPARATION FOR SHIPMENT AND STORAGE

H.12.1 General

This Chapter describes methods of packing before shipment or storage of the MCA. Specific details may vary, depending upon current requirements. The MCA and its interconnection cables should be packed secured in its carrying case. Before packing, verify that the attached tag indicates the equipment status. In case of a failure make sure a list of the faults or the symptoms is attached.

NOTE

When placing the MCA and its interconnection cables in the Carrying case, avoid damage to the foam by the edges or the captive screws of the MCA.

H.12.2 Packing

For the following description refer to Figure H-35.

Typical packing:

a. Place MCA and cables in the carrying case as shown in Figure H-34.

b. Wrap carrying case with a bubble plastic sheet.

c. Place the wrapped carrying case in a carton container.

d. Mark the carton container IAW MIL-STD-129.

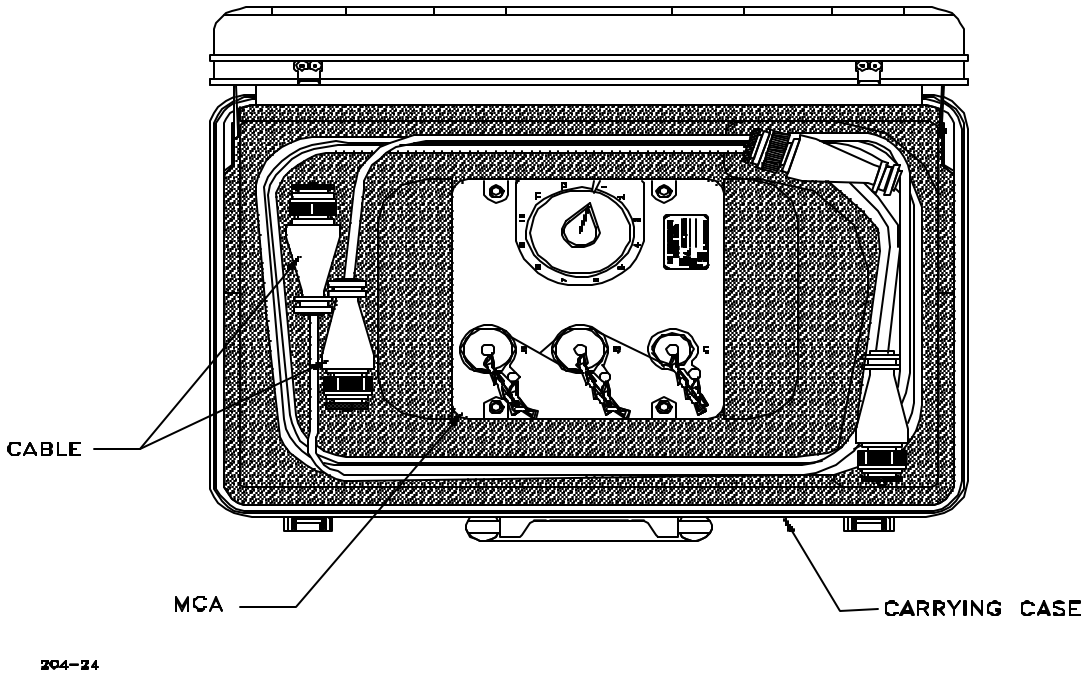

Figure H-34. MCA Carrying Case

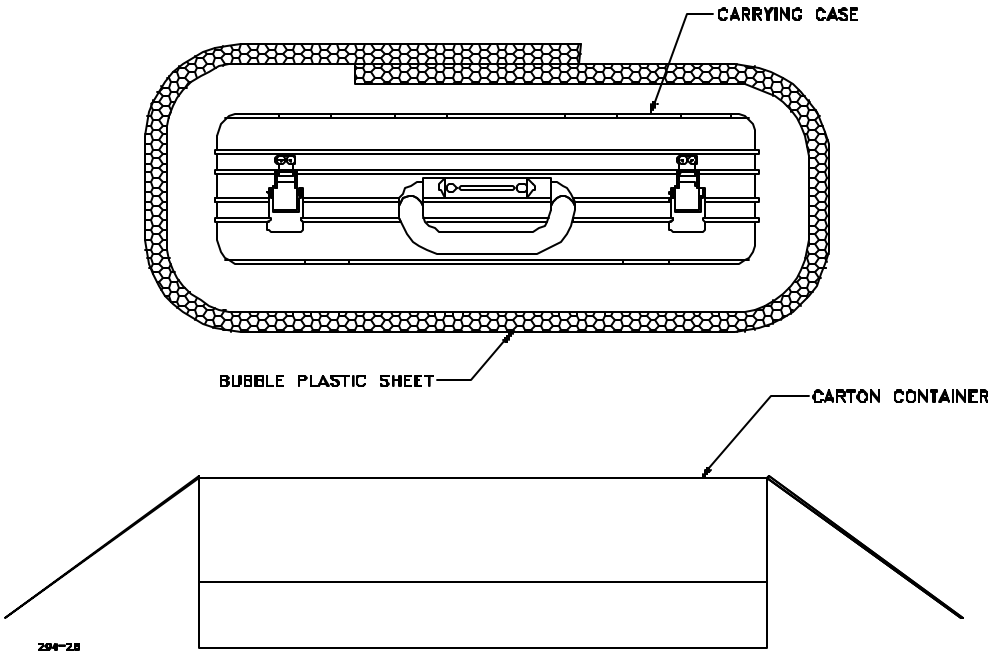

Figure H-35. Packaging the MCA

H.12.3 Shipment in Crates

a. Select wooden crate that will enable placing the packed items Side by side.

b. Seal crate.

c. Mark crate IAW MIL-STD-129

d. The MCA is now ready for shipment or storage

H.12.4 Storage

H.12.4.1 General

Equipment should be stored in a cool, dry location if possible. Components should be kept in the carrying case provided.

H.12.4.2 Environment

The MCA should be stored in an environment suitable for electronic equipment. The environmental conditions should be as follows:

a. Maximum temperature of +150º F

b. Minimum temperature of -50º F

c. Relative humidity ≤95%

H.12.4.3 Return to Service

After storage perform external inspection in accordance with para H.5.1.5.

CHAPTER 6

OVERHAUL PROCEDURES

CHAPTER CONTENT

PAGE

CHAPTER 6 OVERHAUL PROCEDURES H-73
SECTION I GENERAL H-78
H.13 OVERHAUL PROCEDURES H-73
H.13.1 GENERAL H-73
SECTION II CPU, CIRCUIT CARD ASSEMBLY H-74
H.14 CPU, CIRCUIT CARD ASSEMBLY H-74
H.14.1 GENERAL H-74

SECTION I

GENERAL

H.13 OVERHAUL PROCEDURES

H.13.1 General

This Chapter provides instructions for use by depot personnel. It provides additional information, for the maintenance of the MCA. For assemblies and subassemblies, which are not listed in this Chapter, refer to Chapter H.2.

No item shall be repaired/restored if replacement is more cost effective, unless exempt.

H.13.1.1 Attached Documents

Depot maintenance personnel shall carefully check all tags, forms and documents received with the MCA assemblies.

SECTION II

CPU, CIRCUIT CARD ASSEMBLY

H.14 CPU, CIRCUIT CARD ASSEMBLY

H.14.1 General

The following paragraphs provide repair procedures and maintenance information for the CPU circuit card assembly, RSL P/N AY20412143.

H.14.1.1 Test Equipment and Special Tools

The test equipment and special tools listed in Table H-27 shall be used for testing and repairing the CPU circuit card assembly. Each commercially available item of test equipment can be replaced by equivalent to that listed.

Table H-21. Test Equipment and Special Tools

Nomenclature	Part/Spec. No.	Chapter H.7, Figure H-42 Item No.
DC Power Supply 0-10V 3A	Horizon, model HR-100-3	
Digital Multi Meter (DMM)	Hewlett Packard, Model 3478A	
ESD Work Station Kit	M87893-02	
Electronic Equipment Tool Kit	PPL863	
Standard RS232 Communication Harness D9S to D9P	T203AC	
Two BNC to BNC Cable	Local Manufacture	
BNC to Bananas Cable	Local Manufacture	
Oscilloscope	Hewlett Packard, Model 1070B	
Counter/Timer	Fluke, Model 7250A	
MCA Tester	RSL P/N: AY20412269	
Testing Software	On Diskette RSL P/N: CM20410855	
Programming Software	On Diskette RSL P/N: CM20412349	
Software to be Programmed	On Diskette RSL P/N: CM20412437 Or Any Other Released Version.	
Personal Computer	IBM or IBM Compatible with: Serial Port Configured as COM1. Floppy Disk Driver, 3.5 Inch, 1.44M. MS-DOS Version 6.2 or Higher.	

H.14.1.2 Materials Required

Repair materials and other consumable items required are listed in Table H-21.

Table H-22. Material Required

Nomenclature	Pars/Spec No.	Appendix F Item No.
Adhesive	MIL-A-46146, Type III	34
Insulation Compound	MIL-I-46058 Type 1B31	
Solder Wire	SN63WRMAP3-0.6MM	
Anti Static Bag	3271576	

H.14.1.3 General Repair Requirements

CAUTION

The CPU assembly contains components subject to damage by electrostatic discharge (ESD) Use approved grounding procedures before touching, removing, or inserting Assembly.

a. Ensure that components are properly oriented before installing.

b. Connector must be mounted flush to board. No angle is allowed.

c. Do not bend or cut leads of J4 and L12.

d. Apply uniform coating of MIL-I-146058 type 1B31 insulation compound, 0.003±0.002 inch thick, where compound has been removed during repair process.

e. After applying insulation compound, Bond capacitors C17, C33, C51 board using adhesive, MIL-A-46146 TYPE III.

f. Do not apply insulation compound to mounting holes or connector contacts.

H.14.1.4 Removal

Perform MCA disassembly IAW Para. H.2.2.5.

H.14.1.5 Cleaning

For cleaning and lubricate instructions refer to Para. 3.1.4 in this manual.

H.14.1.6 Visual Inspection

a. Inspect all components for security of attachment.

b. Inspect all parts for damage, wear and deterioration.

c. Inspect all parts for nicks, scoring, dents, scratches, and broken welds.

d. Inspect all threaded parts for crossed stripped or otherwise damaged threads.

e. Inspect all parts for cracks, dents, scratches and corrosion.
f. Inspect all electronic parts for indication of over heat, cracked bodies, loose terminals, broken leads and other indication of damage.
g. Inspect connector for broken, bend, loose, damaged or missing pins.
h. Repair or replace all fault or damaged parts

H.14.1.7 Installation

Perform MCA reassemble IAW Para. H.1.2.1.6.

H.14.1.8 Testing

H.14.1.8.1 General

The functional test setup is as shown in Figure 8-4. Figure 8-1 and Figure 8-2 are detailed illustrations of the Tester.

H.14.1.8.2 Test Data Sheet

The test data sheet in 8-3 shall be reproduced locally, as required, for recording the test results. The test data sheet shall be filled during test procedure performance. The completed test data sheet shall be retained and used as a troubleshooting aid.

H.14.1.8.3 Test Set-up

Communication harness can be locally manufactured using the components as define in Para. H.2.2 Figure H-8.

CAUTION

The CPU assembly contains components subject to damage by electrostatic discharge (ESD) Use approved grounding procedures before touching, removing, or inserting Assembly.

CAUTION

Ensure the UUT or other test equipment is not powered prior to disassembly or reassembly.

Hereafter, the CPU circuit card assembly will be referred to as the Unit Under Test (UUT)

a. Verify tester power switch is off.
b. Adjust power supply output to 5.6±0.1Vdc.
c. Connect standard communication harness between PC COM1 and MCA tester J2.
d. Verify “PROG” switch on tester panel is off.
e. Set the selector mounted on the tester “Gun No.” to “1”.
f. Connect “CLK” BNC socket, mounted on the tester, to channel two of the oscilloscope.
g. Connect “VCC” BNC socket, mounted on the tester, to channel one of the oscilloscope.
h. Plug in the UUT to tester J1.
i. Set tester power switch ON.
j. Turn PC on.

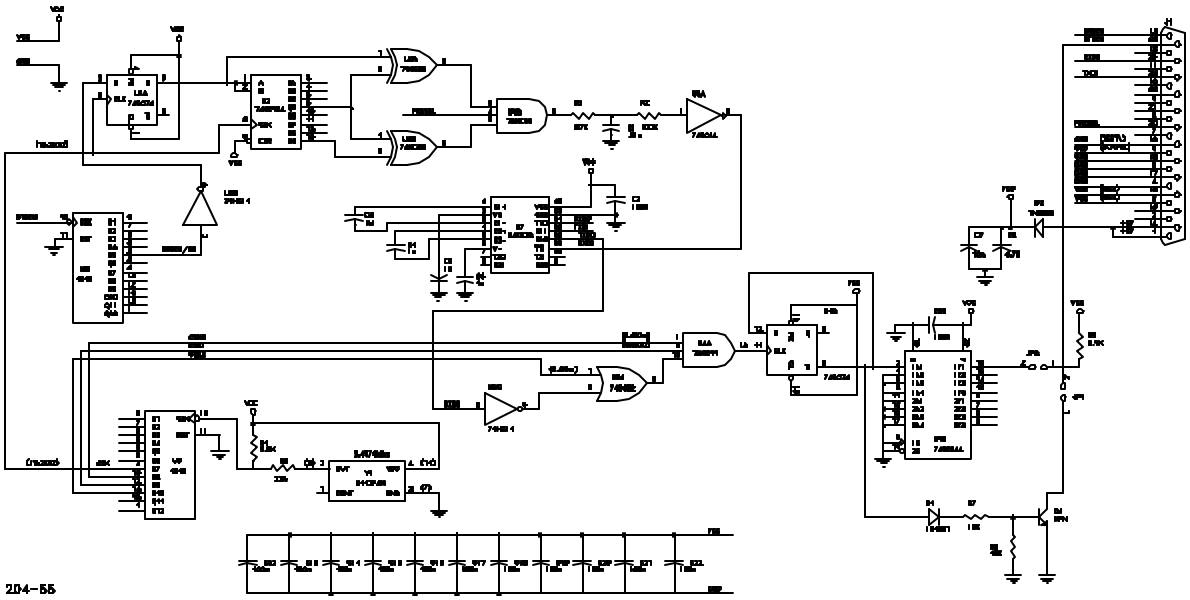

Figure H-36. Tester Schematic Diagram

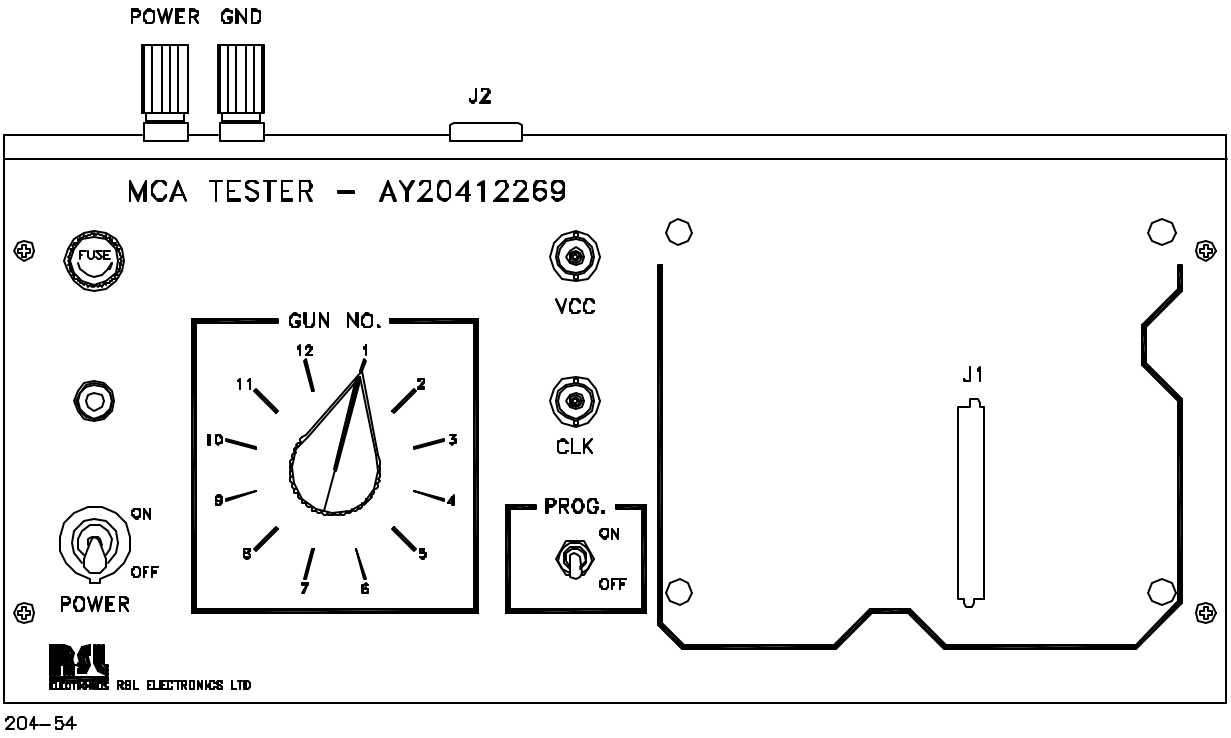

Figure H-37. MCA Tester

H.14.1.8.4 Test Procedure

Regulated 5Vdc (“VCC”)

Set channel one of the oscilloscope to coupling “AC”.

Set the Volt/Div selector to 0.05V/Div.

Verify maximum amplitude of 0.1Vac peak to peak.

Reduce power supply voltage to 4.5±0.2Vdc.

Verify maximum amplitude of 0.1Vac peak to peak.

Disconnect the BNC cable from “VCC” BNC socket and connect the BNC to Bananas cable between the “VCC” BNC socket and the DMM.

Verify with the DMM 5±0.1Vdc.

Set power supply voltage to 5.6±0.1Vdc.

Verify with the DMM 5±0.1Vdc.

H.14.1.8.4.2 Clock out (“CLK”)

Set channel two of the oscilloscope to coupling “DC”.

Set the Volt/Div selector to 2V/Div.

Verify by the oscilloscope CH2 a square wave signal at an amplitude of 5±0.1V (VL=(0±0.2); VH=(5±0.1))

Move the BNC connector from the oscilloscope channel 2 to the counter and verify frequency of 307.2±0.3KHz.

H.14.1.8.4.2 Communication Channel

a. Run testing software ATP.EXE on PC. Select “CPU ;TOP ASSY” from the main menu by typing “2”.

b. The following message will appear on the PC screen:

Testing MCA number 1…
MCA number 1, version 1.7 is O.K

c. In case of a fault, the following message will appear:

MCA number 1 has failed
Failure time Mon Mar 07 18:04:00 2000

d. Verify the PC identifies the position of the selector.

e. Repeat the test in Para. “O” for all 12 positions of the “GUN NO.” selector mounted on the tester.

f. Verify version of software is as required.

g. Press “ESC” twice to return to main.

h. Turn off tester power switch and power supply.

END OF TEST

Serial Number: .....

Date: .....

Regulated 5V (VCC)

Para. 8.3.9.4	Expected	Measured	Passed	Failed
c	<0.1Vac p-p			
e	<0.1Vac p-p			
g	(5±0.1)Vdc			
i	(5±0.1)Vdc			

Clock Out (CLK)

Para. 8.3.9.4	Expected	Measured	Passed	Failed
l	(5±0.1)Vdc			
m	(307.2±0.3)KHz			

Communication Channels

Para. 8.3.9.4	Passed	Failed
o		

GUN NO. Identification

Para. 8.3.9.4	Position	Passed	Failed
p	1		
	2		
	3		
	4		
	5		
	6		
	7		
	8		
	9		
	10		
	11		
	12		

Version of Software

Para. 8.3.9.4	Required	Indicated	Passed	Failed
q				

Tested By: .....

Inspected By: .....

Figure H-38. CPU Circuit Card Assembly, Test Data Sheet

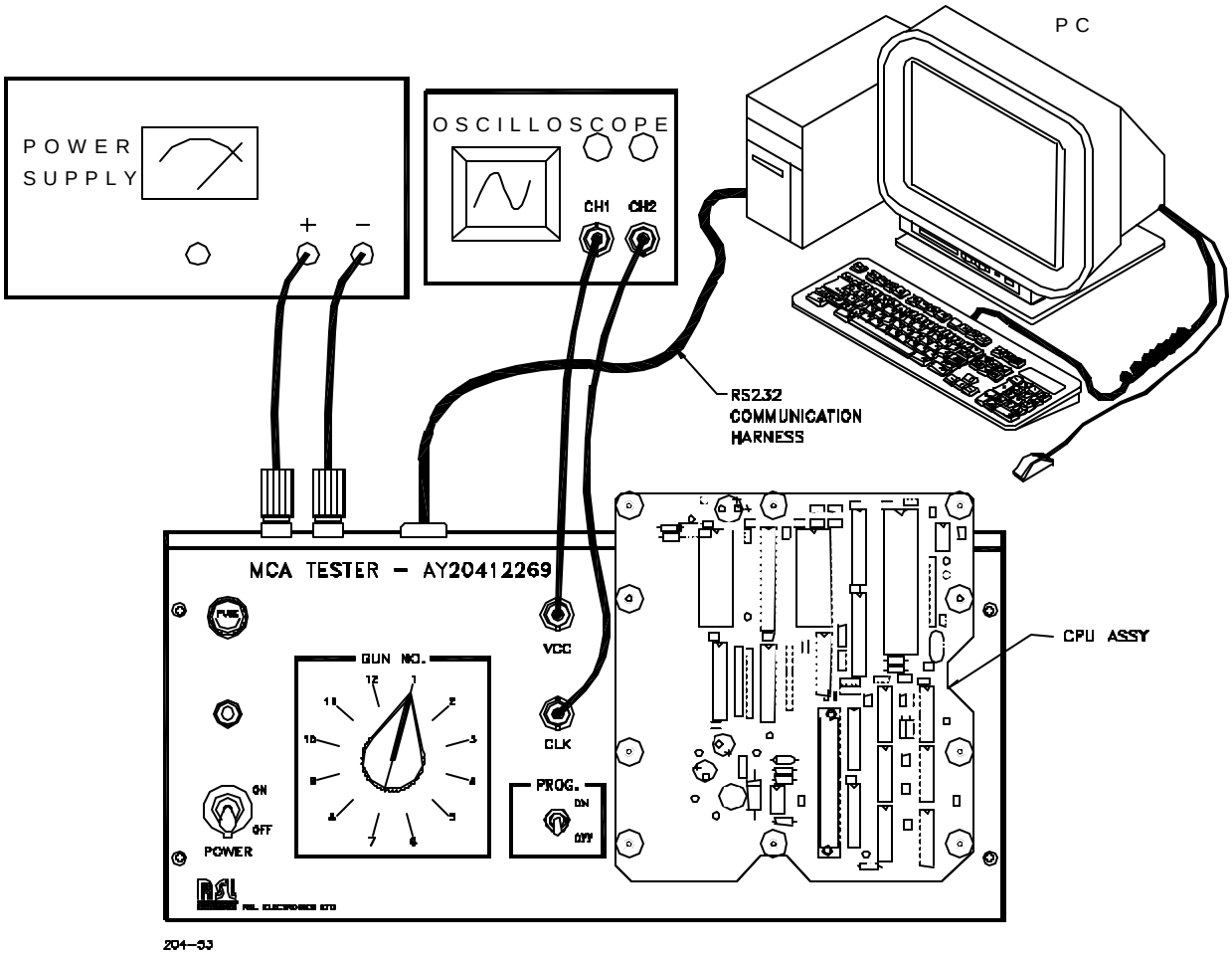

Figure H-39. CPU ASSY. Test Set-up.

H.14.1.9 Troubleshooting

This paragraph contains the troubleshooting procedures for UUT failures detected during testing. The troubleshooting shall be performed under the same test conditions as define in the test procedure Para H.8.3.9. Refer to Figure 8-5 for the components location. Refer to Para. H.11 Diagram no. 1 for the CPU assembly schematic diagram.

The CPU assembly contains components subject to damage by electrostatic discharge (ESD) Use approved grounding procedures before touching, removing, or inserting Assembly.

CAUTION

Ensure the UUT or other test equipment is not powered prior to disassembly or reassembly.

NOTE

After completion of troubleshooting and repair, perform complete Test procedure Para.

H.14.1.9.1 Regulated 5Vdc, Para. H.8.3.9.4/c,e,g,i

Step	Location	Expected Signal	Action Shall be Taken if Measure is Not as Expected
1	U13 pin 5	5±0.5 V dc	Verify D2 is short. Replace C17
2	U13 Pin 3	1.24±0.02 V dc	Replace U13

H.14.1.9.2 Clock Out, Para. H.8.3.9.4/l,m

Step	Location	Expected Signal	Action Shall be Taken if Measure is Not as Expected
1	U1 Pin 19	12MHz sine wave	Replace Y1 Replace C1 and C2.
2	U1 Pin 1	307.2KHz / 5Vp-p square wave	Replace U1 Replace U3 Replace U7

H.14.1.9.3 Communication Channel, Para. H.8.3.9.4/o

Step	Location	Expected Signal	Action Shall be Taken if Measure is Not as Expected
1	U18 Pin 3	153.6KHz / 5Vp-p square wave logic level.	Replace U18
2	U12 Pin 6	Check signal for logic levels. Verify signal in Pin 6 is the inverse of the signal in U12 Pin 5	Replace U12
3	U14 Pin 5	Check signal for logic levels.	Replace U14 Replace U15 Replace U16
4	U15 Pin 6	Check signal for logic levels.	Replace U15 Replace U16
5	U16 Pin 3	Check signal for logic levels.	Replace U16 Replace U17
6	U17 Pin 6	Check signal for logic levels.	Replace U17
7	U14 pin 8	Check signal for logic levels. Verify FSK modulation signal 1" = 38.4KHz 0" = 76.8KHz	Replace U14 Replace U20 Replace U17 Replace U12 Replace U16
8	U20 Pin 4	Check Pin 4 for logic levels FSK modulation signal.	Replace U20
9	U11 Pin 2	10V dc	Replace U11
10	U11 Pin 6	-10V dc	Replace U11
11	U11 Pin 14	Check for RS232 levels 1" = -9±2 Vdc 0" = 9±2 Vdc	Replace U11
12	If failure still exist, replace U10		

H.14.1.9.4 Gun No Identification, Para. H.8.3.9.4/p

If any of the Gun No. position was not identified replace U9. Replace Z2.

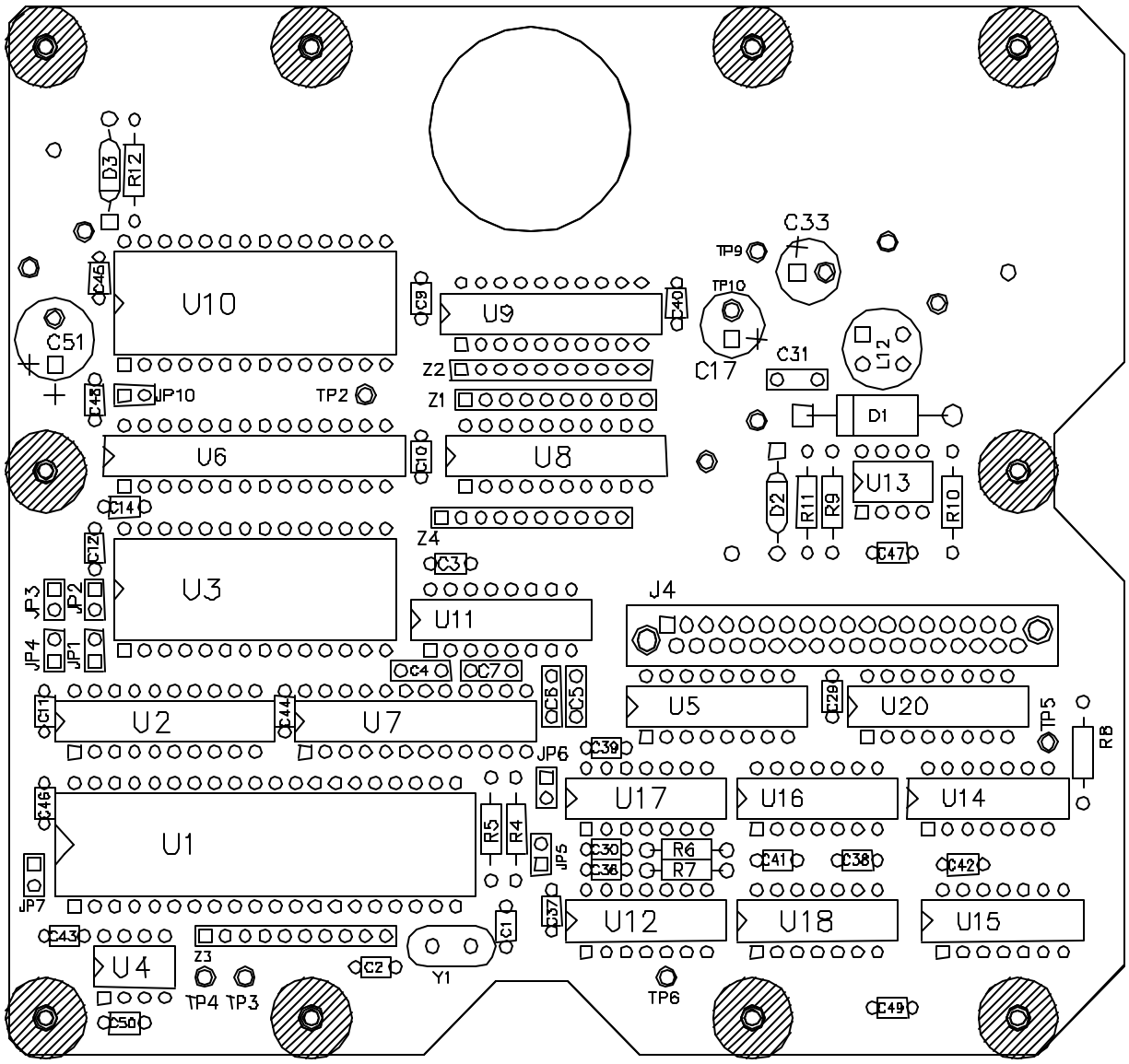

Figure H-40. CPU Assembly, Components Location

H.14.1.9.5 Version of Software Para. H.8.3.9.4/q

Reprogramming:

a. Verify tester power switch is off.

b. Adjust power supply output to 5.6±0.1Vdc.

c. Connect standard communication harness between PC COM1 and MCA tester J2.

d. Verify "PROG" switch on tester panel is ON.

e. Plug in the UUT to tester J1.

f. Set tester power switch ON.

NOTE

The tester power switch shall be turn on only after the "PROG" switch on tester panel is ON. If you are not sure cycle power.

a. Turn PC on.

b. Run software PCMCA.EXE by typing "PCMCA" and pressing the Enter key.

c. Select the only item in the menu "programming" by pressing the Enter key.

d. In the File Name window type the MCA software name: MCA_MAIN.HEX. Press the Enter key to confirm. the message "converting HEX file" will appear on the lower window For about one minute.

e. After the conversion is finished, the programming process starts Automatically. Verify that the following indications appears on the screen:
A progress indicator appears on the upper window. A block number counter appears in the OUTPUT window.

f. If there is an error message on the screen, or one of the above indications doesn't shows, verify all the connections are as defined And repeat the process.

g. At successful reprogramming the screen will change back to the Initiate one.

h. Press Esc. to exit the program.

END of process.

CHAPTER 7

GLOSSARY

CHAPTER CONTENT

PAGE

CHAPTER 7 GLOSSARY.....H-90
H.15 GLOSSARY.....H-90
H.15.1 ACRONYMS.....H-90

H.15 GLOSSARY

H.15.1 Acronyms

The following acronyms are used in this appendix:

Acronym	Definition
Assy.	Assembly
BCS	Battery Computer System
BIT	Built-In Test
CCA	Control Case Assembly
CPDU	Control Processor and Display Unit
CPU	Central Processing Unit
DFBCU	Data from Battery Computer System
DMM	Digital Multi Meter
DTBCU	Data to Battery Computer System
EEPROM	Electrical Erase Prom
EMI	Electro Magnetic Interference
ESD	Electro Static Discharge
FSK	Frequency shift Keying
GDU	Gun Display Unit

Acronym	Definition
GND	Ground
Hz	Hertz
I/O	Input/Output
IAW	In Accordance With
Kg	Kilogram
KHz	Kilo Hertz
MCA	MVS Communication Adapter
MHz	Mega Hertz
MIL-STD	Military Standard
MIN	Minimum
MVS	Muzzle Velocity System
PC	Personnel computer
PWB	Printed Wiring Board
RAM	Random Access Memory
RET	Return
RFI	Radio Frequency Interference
RXD	Received Data
SCA	Section chief Assembly
SIG.	Signal
TXD	Transmitted Data
UUT	Unit Under Test
V	Volts
W	Watts

CHAPTER 8

FOLDOUT DIAGRAMS

CHAPTER CONTENT

PAGE

CHAPTER 8 FOLDOUT DIAGRAMS H-88

H.16 FOLDOUT DIAGRAMS

Diagram No.	Title
1	CPU CIRCUIT CARD ASSEMBLY, P/N AY20412143
2	EMI-FILTER CIRCUIT CARD ASSEMBLY, P/N AY20412144

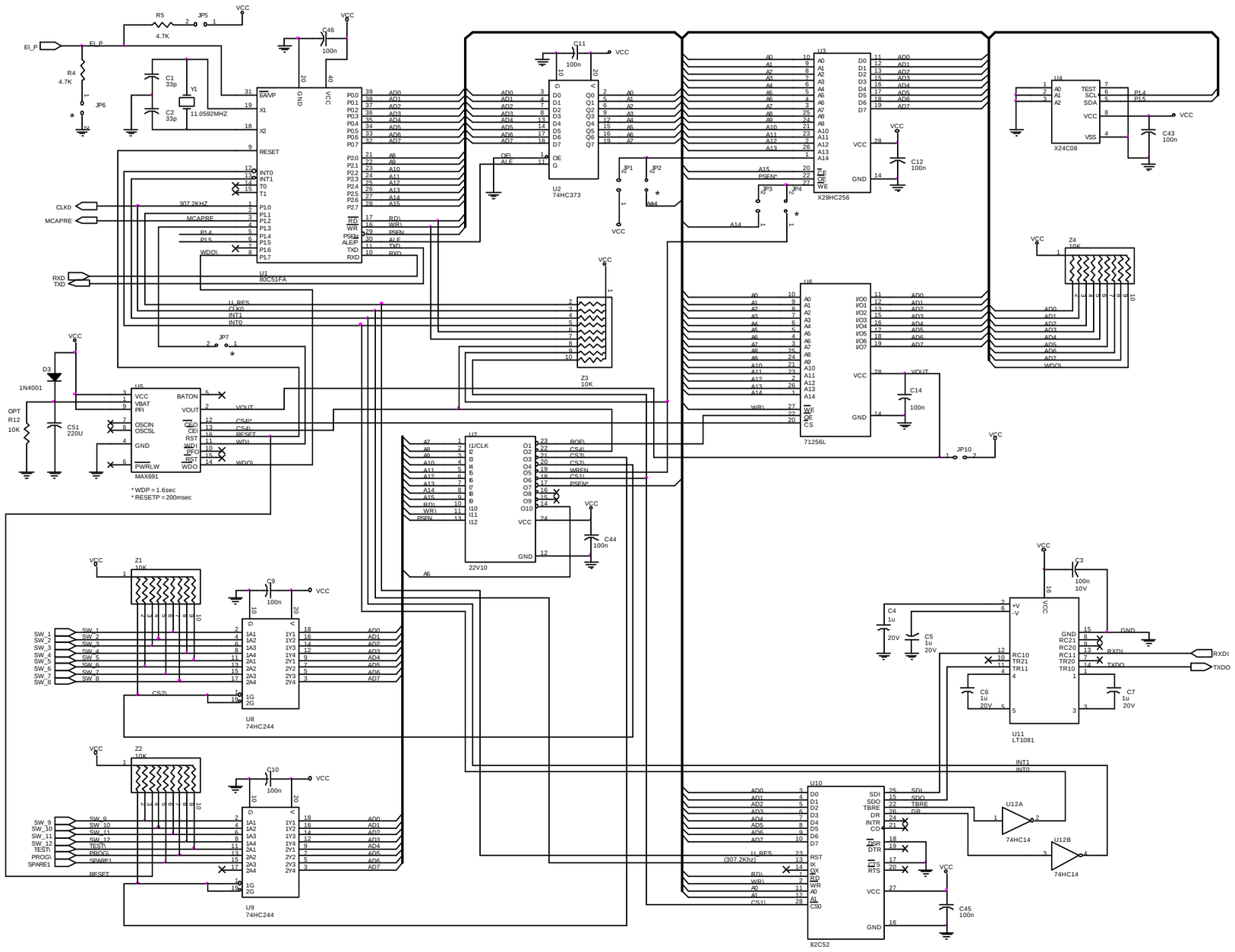

H-FO 1. CPU Circuit Card Assembly, P/N AY20412143 (Sheet 1 of 2)

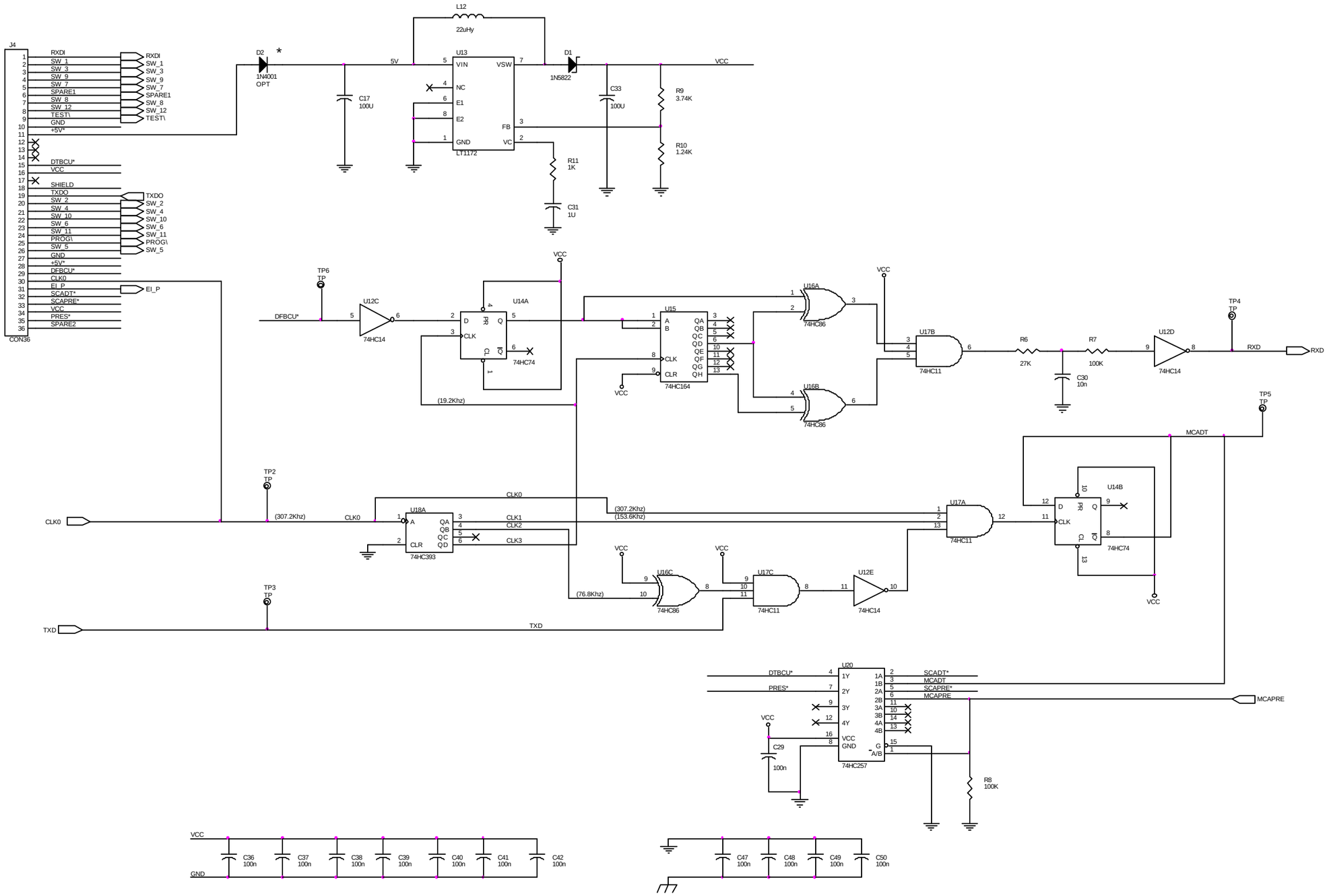

H-FO 1. CPU Circuit Card Assembly, P/N AY20412143 (Sheet 2 of 2)

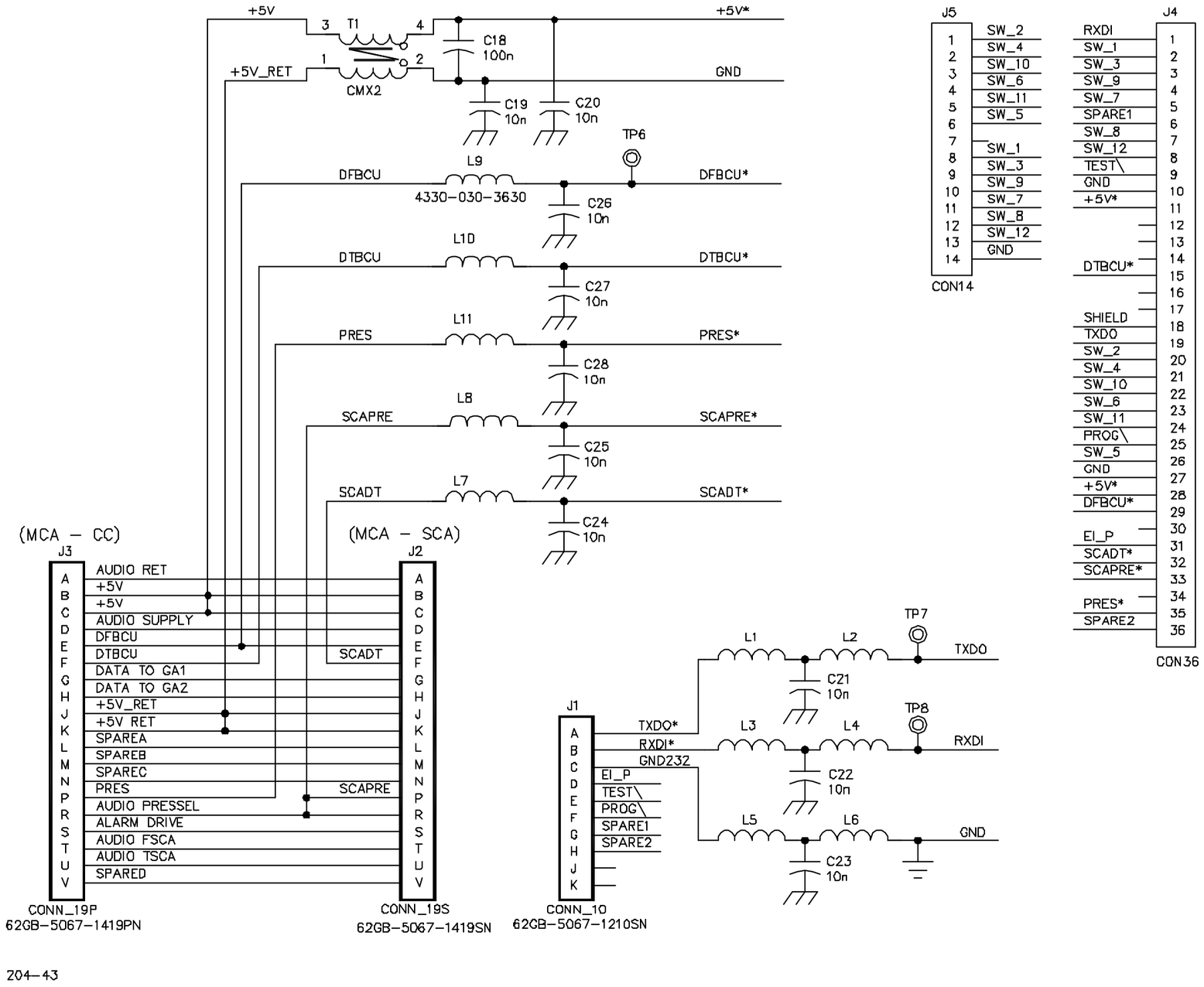

H-FO 2. EMI-Filter Circuit Card Assembly, P/N AY20412144

By Order of the Secretary of the Army:

ERIC K. SHINSEKI
General, United States Army
Chief of Staff

Official:

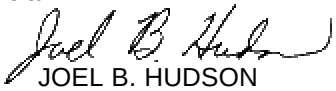

JOEL B. HUDSON
Administrative Assistant to the
Secretary of the Army
0126203

DISTRIBUTION: To be distributed in accordance with the initial distribution requirements for TM 9-1290-364-14&P, IDN 401102:

FOLDOUT DIAGRAMS

CONTENTS

FO No.	Title	Page
FO-1.	CPDU Harness, P/N WA6706707-0 Schematic Diagram	FO-3
FO-2.	CPDU Power Supply Module, P/N AY6706704-0, Schematic Diagram	FO-5
FO-3.	CPDU MVP CCA, P/N AY6706703-0, Schematic Diagram	FO-9
FO-4.	Doppler Amplifier CCA, P/N AY6706566-0, Schematic Diagram	FO-23
FO-5.	Linear Power Supply Module, P/N AY6706620-0, Schematic Diagram	FO-25

THIS PAGE INTENTIONALLY LEFT BLANK

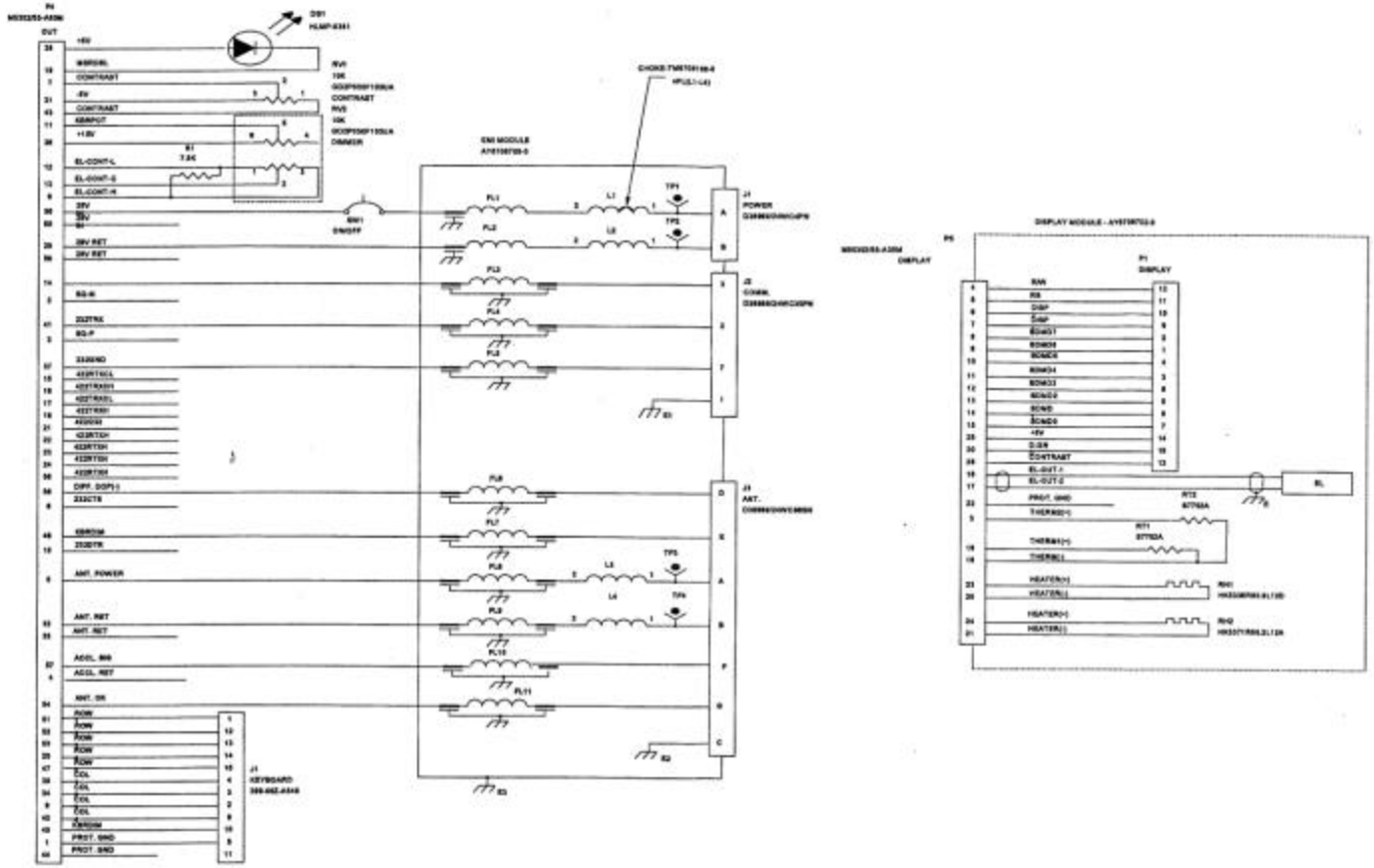

FO-1. CPDU Harness, P/N WA6706707-0 Schematic Diagram

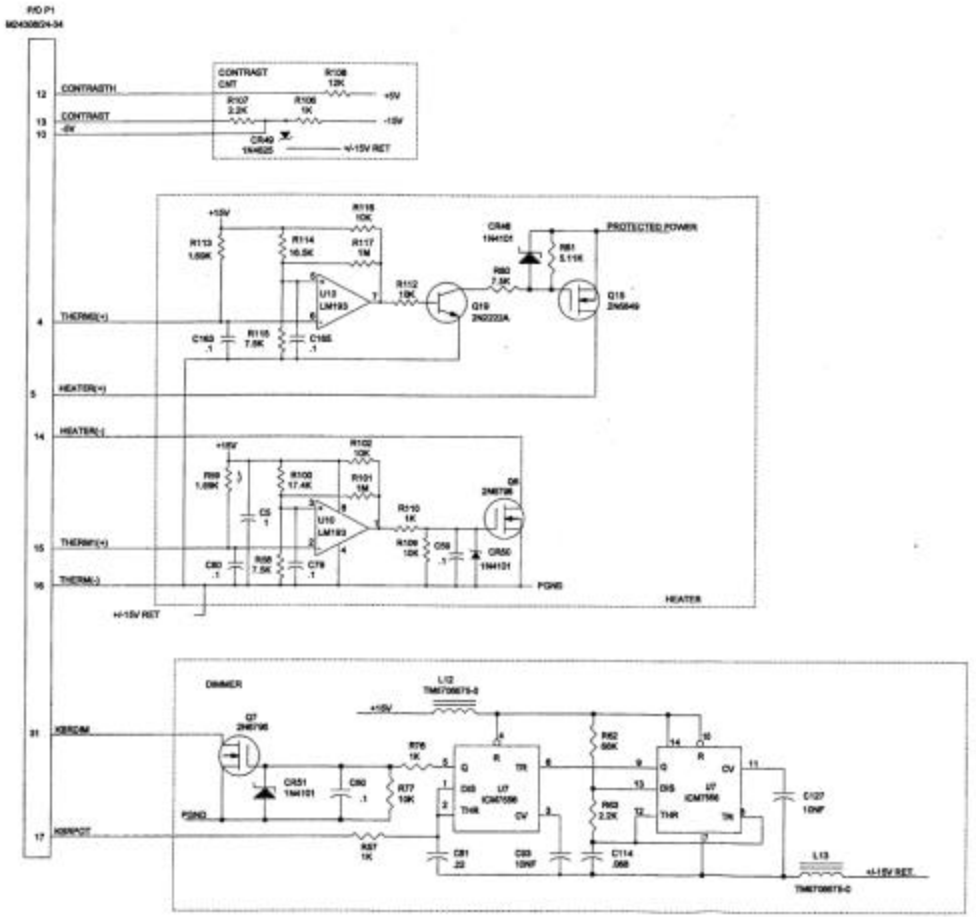

HIGHEST REFERENCE DESIGNATION								
R117	C105	CR51	Q19	L14	JP3	U12	TY2	F1
REFERENCE DESIGNATION NOT USED								
R36,R47		CR35,CR50, CR38	Q1,Q3, Q18			U4,U5		

FO-2. CPDU Power Supply Module, P/N AY6706704-0, Schematic Diagram (Sheet 1 of 2)

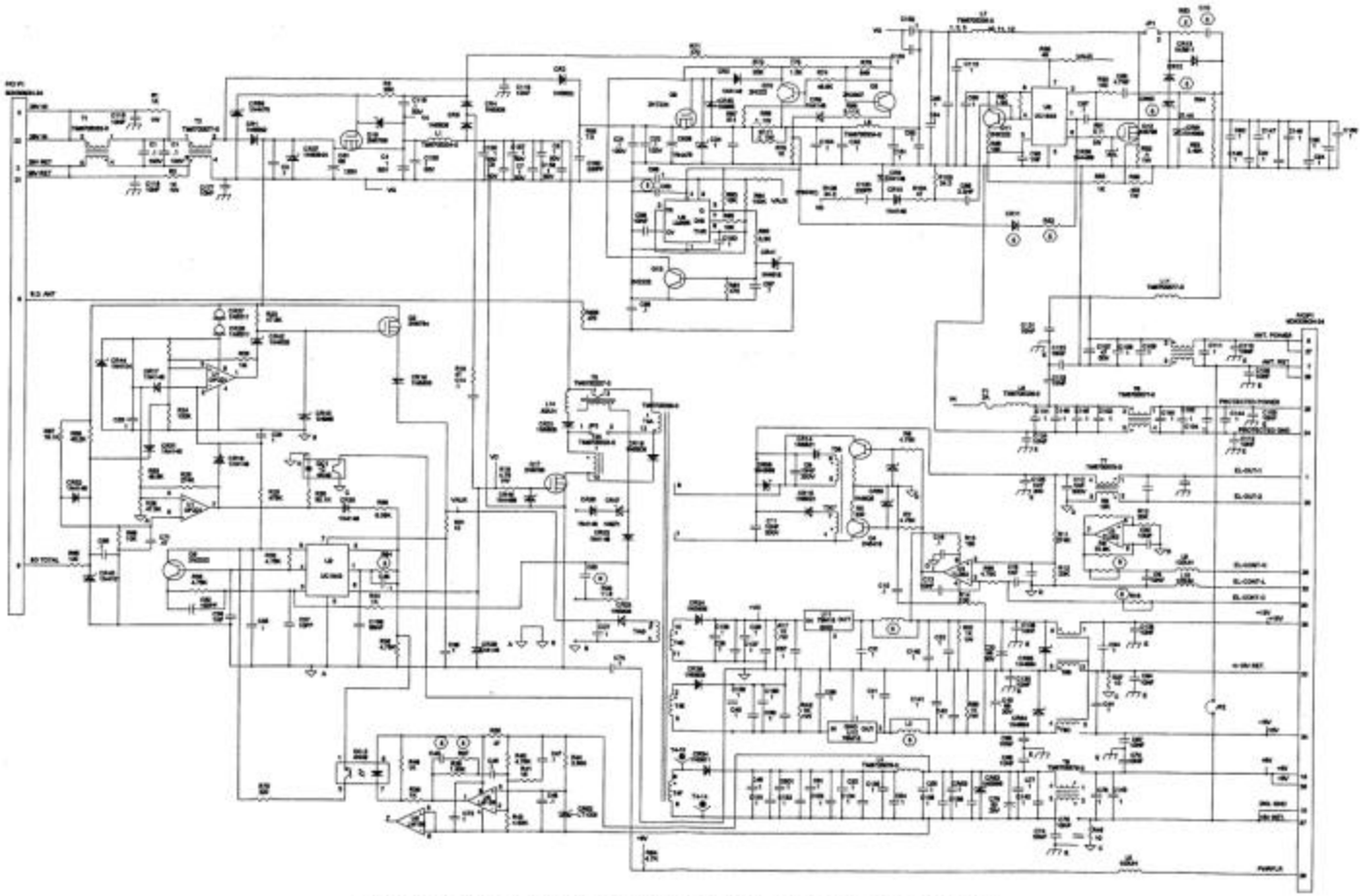

FO-2. CPDU Power Supply Module, P/N AY6706704-0, Schematic Diagram (Sheet 2 of 2)

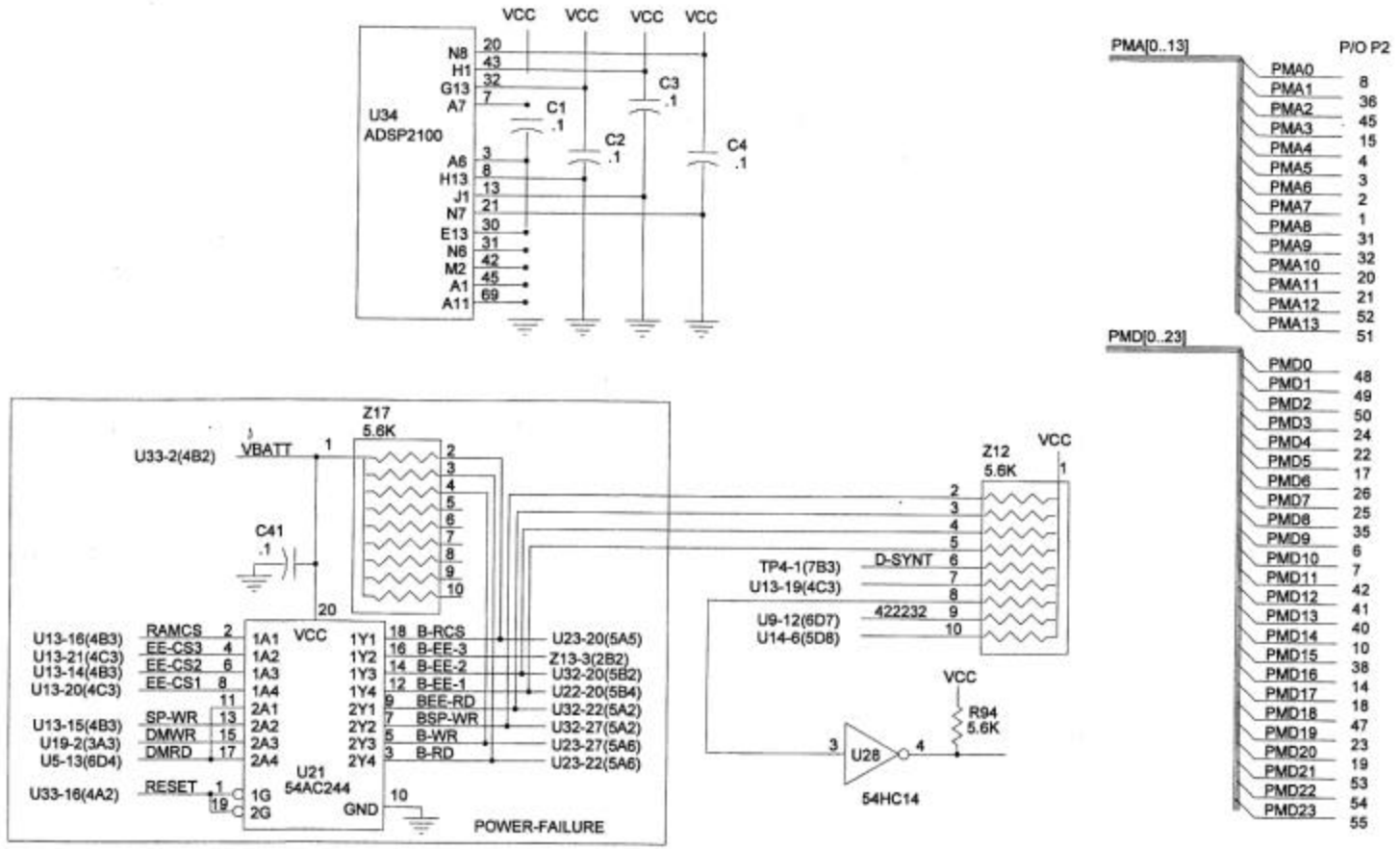

FO-3. CPDU MVP CCA, P/N AY6706703-0, Schematic Diagram (Sheet 1 of 7)

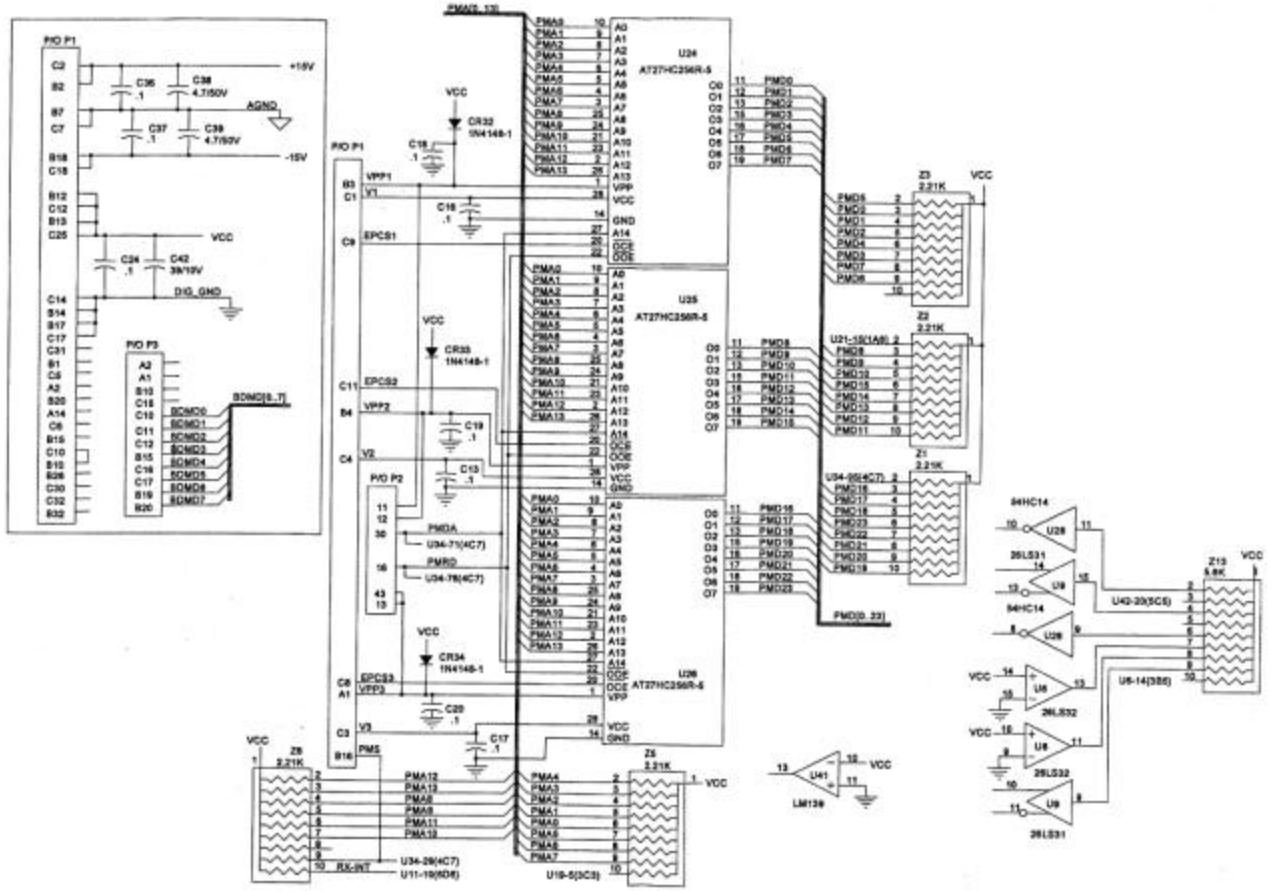

FO-3. CPDU MVP CCA, P/N AY6706703-0, Schematic Diagram (Sheet 2 of 7)

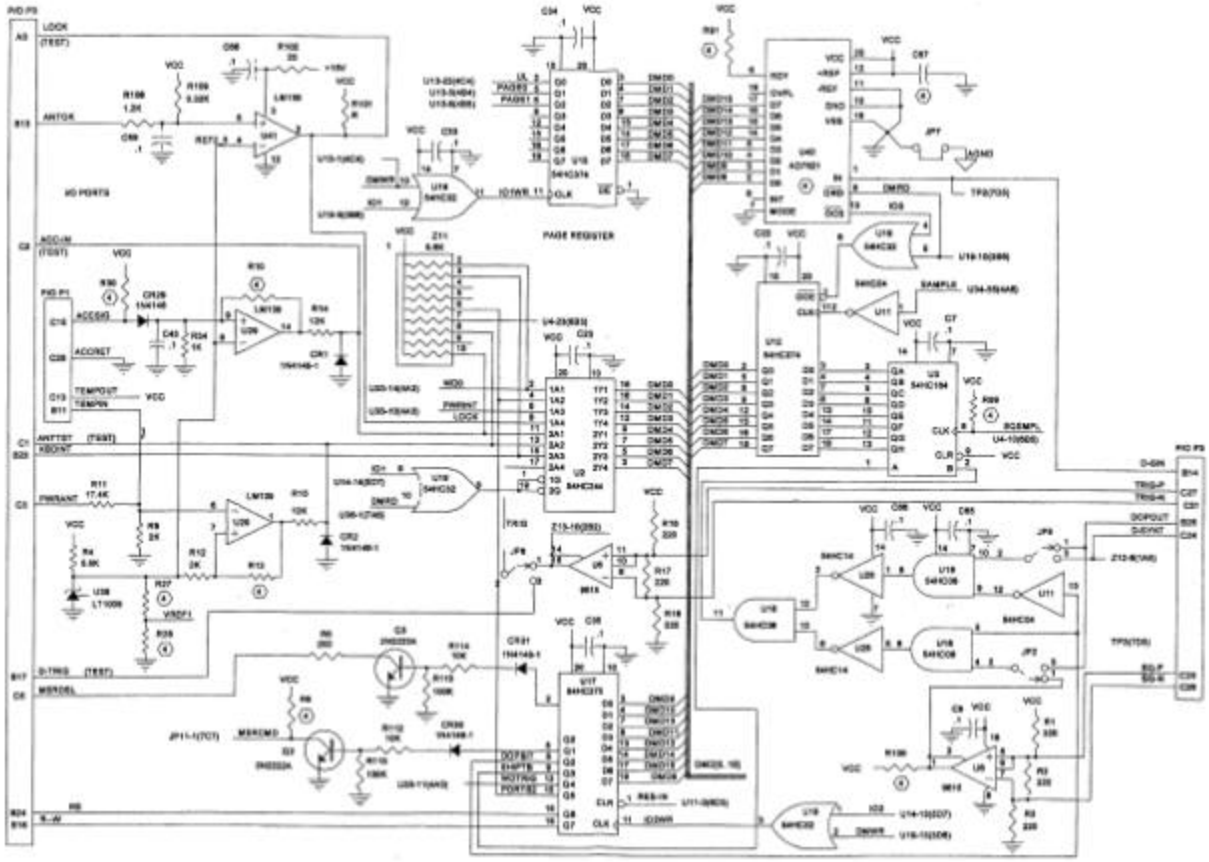

FO-3. CPDU MVP CCA, P/N AY6706703-0, Schematic Diagram (Sheet 3 of 7)

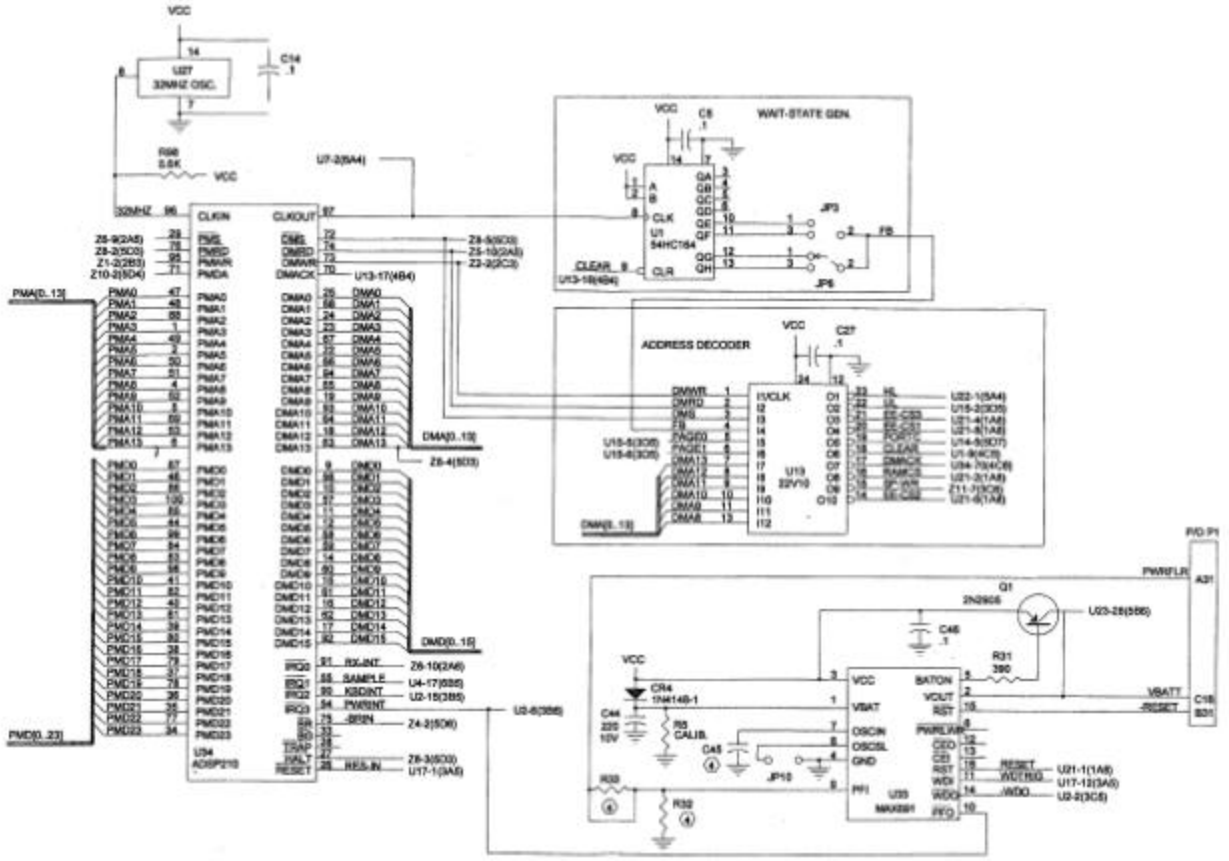

FO-3. CPDU MVP CCA, P/N AY6706703-0, Schematic Diagram (Sheet 4 of 7)

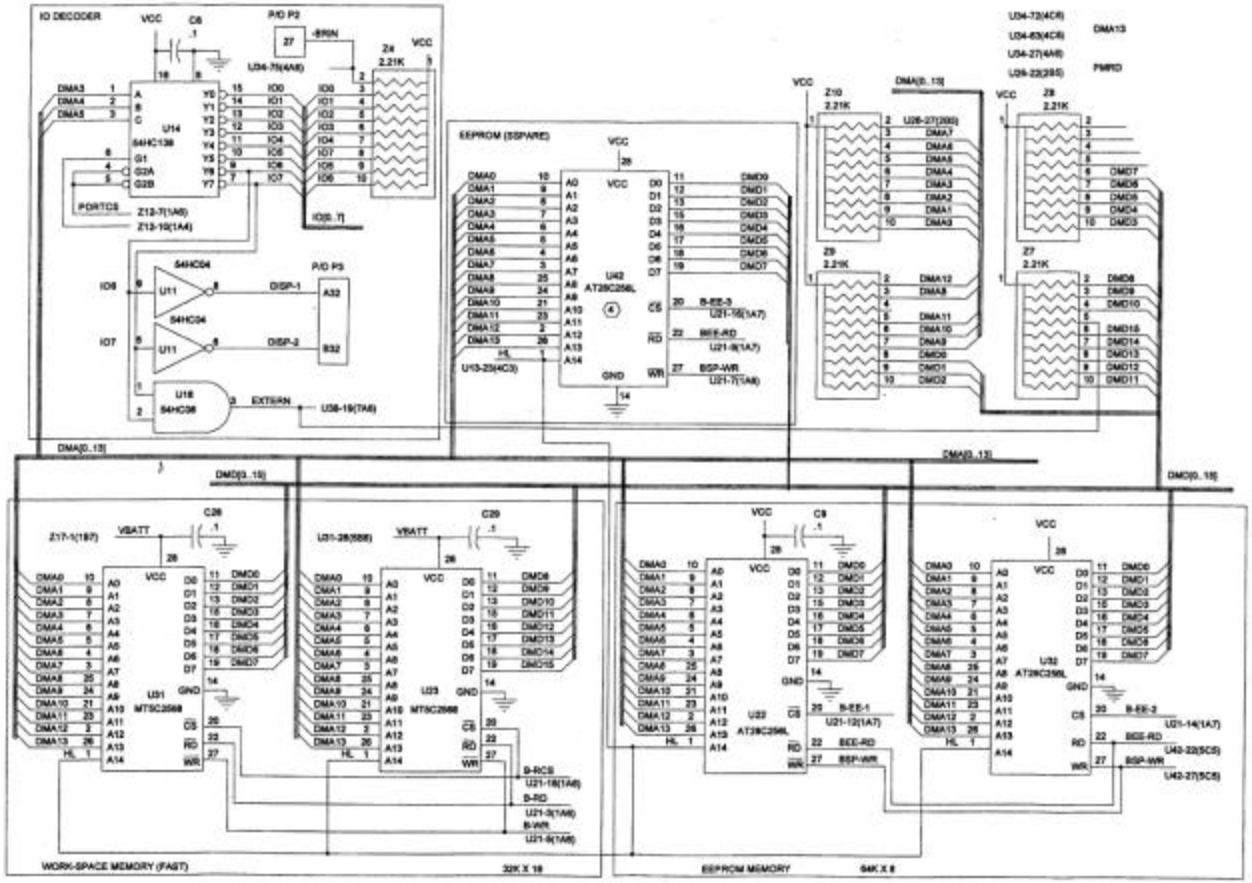

FO-3. CPDU MVP CCA, P/N AY6706703-0, Schematic Diagram (Sheet 5 of 7)

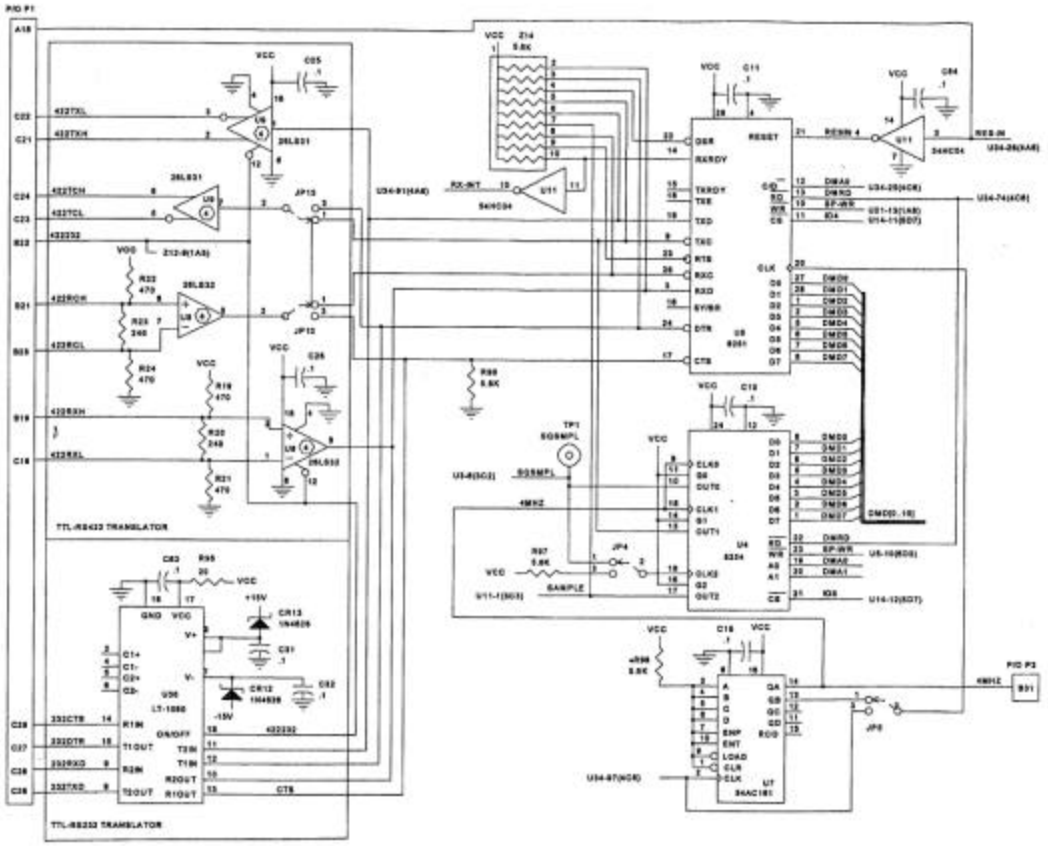

FO-3. CPDU MVP CCA, P/N AY6706703-0, Schematic Diagram (Sheet 6 of 7)

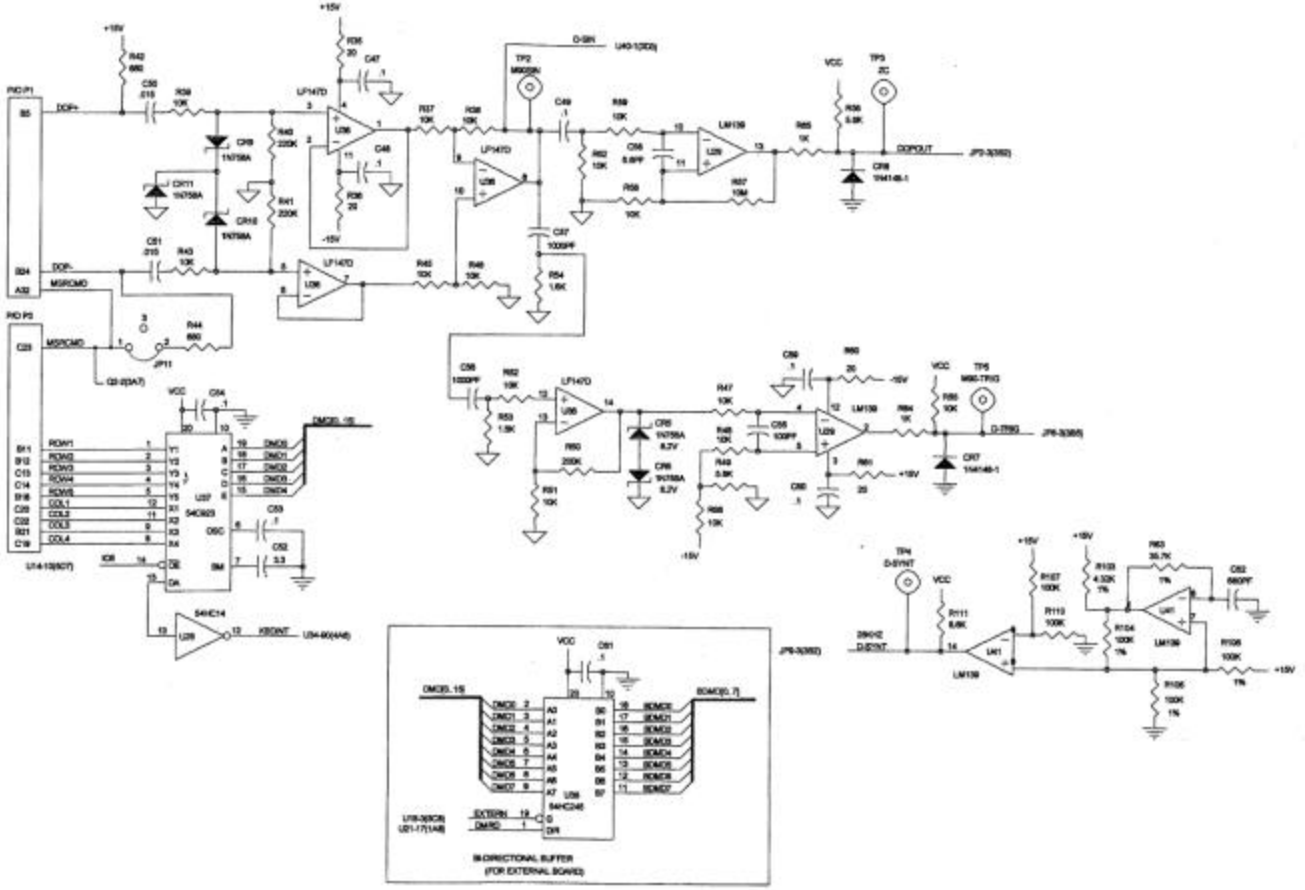

FO-3. CPDU MVP CCA, P/N AY6706703-0, Schematic Diagram (Sheet 7 of 7)

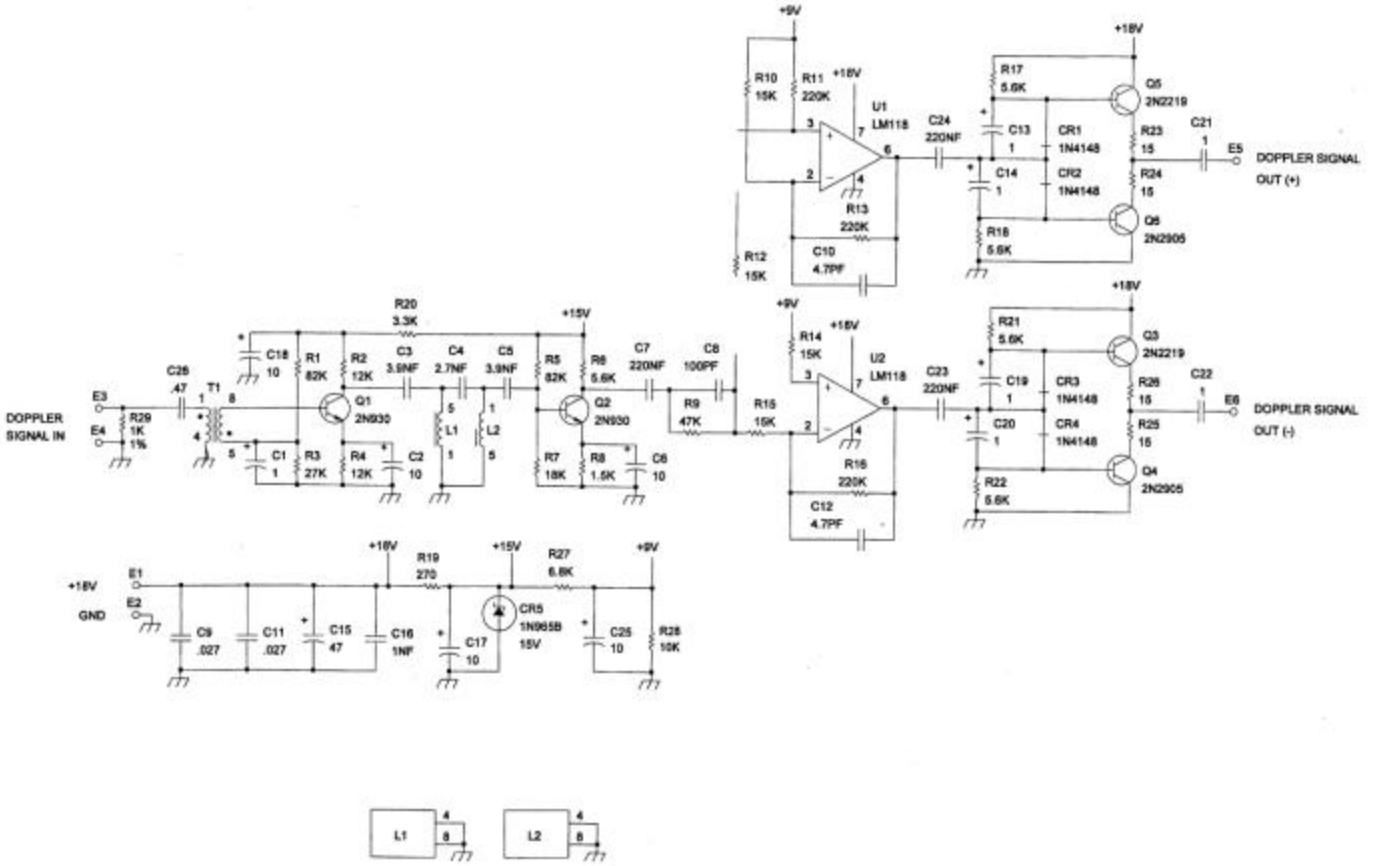

MVS0002/LD6706564

FO-4. Doppler Amplifier CCA, P/N AY6706566-0, Schematic Diagram

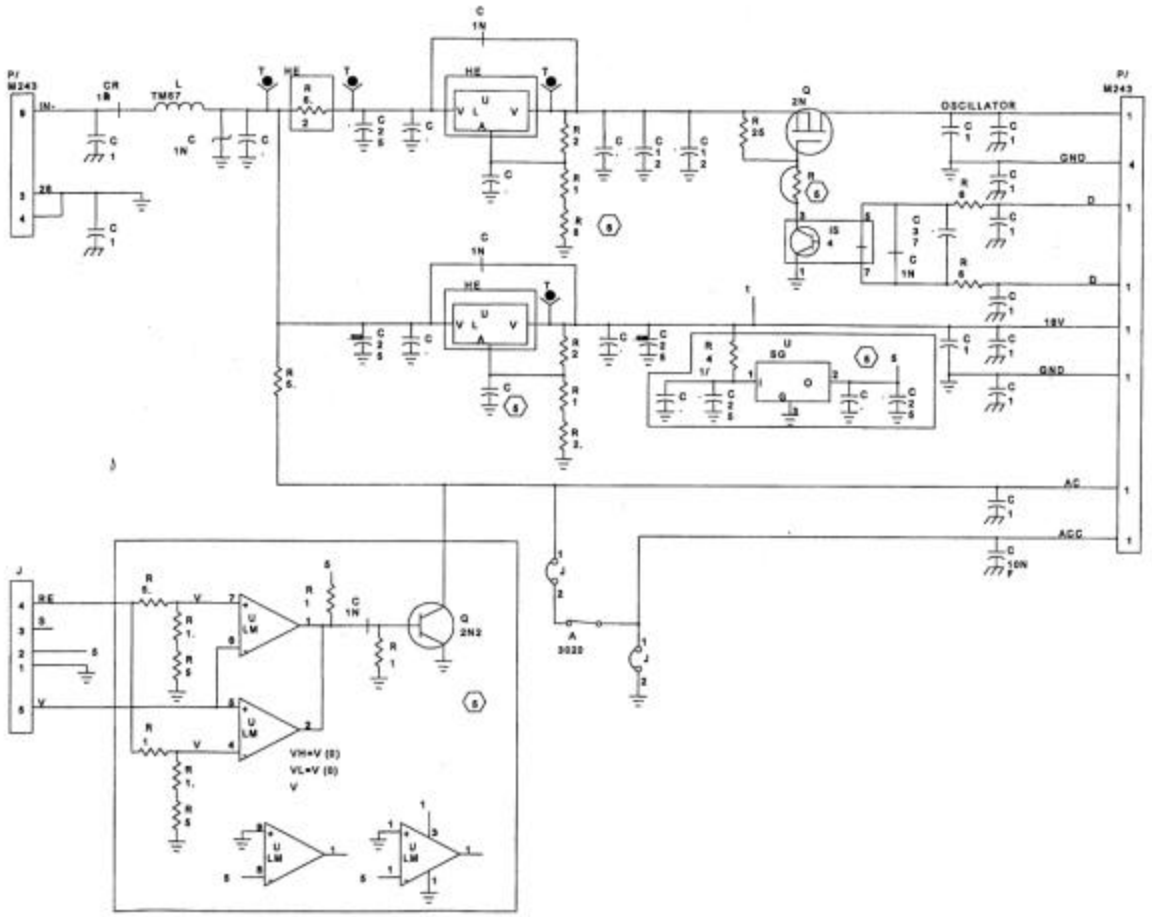

FO-5. Linear Power Supply Module, P/N AY6706620-0, Schematic Diagram

RECOMMENDED CHANGES TO PUBLICATIONS AND *BLANK FORMS* For use of this form, see AR 25-30; the proponent agency is ODISC4.	Use Part II *(reverse)* for Repair Parts and Special Tool Lists (RPSTL) and Supply Catalogs/Supply Manuals (SC/SM).	DATE Date you filled out this form.
TO: *(Forward to proponent of publication or form) (Include ZIP Code)* AMSTA-LC-CI / TECH PUBS, TACOM-RI 1 Rock Island Arsenal Rock Island, IL 61299-7630	FROM: *(Activity and location) (Include ZIP Code)* Your mailing address	

PART I – ALL PUBLICATIONS (EXCEPT RPSTL AND SC/SM) AND BLANK FORMS

PUBLICATION/FORM NUMBER:	DATE:	TITLE:
TM 9-1290-364-14&P	15 November 2001	Operator, Unit, D.S., and G.S. Maint. Repair Parts and Special Tools List through Depot for Conventional Muzzle Velocity System M94 and, Communication Adapter (MCA)

ITEM NO.	PAGE NO.	PARA-GRAPH	LINE NO. *	FIGURE NO.	TABLE NO.	RECOMMENDED CHANGES AND REASON *(Provide exact wording of recommended changes, if possible).*
	3-53	3.4.8				Step b should come before step a.

SAMPLE

**Reference to line numbers within the paragraph or subparagraph.*

TYPED NAME, GRADE OR TITLE	TELEPHONE EXCHANGE/AUTOVON, PLUS EXTENSION	SIGNATURE
Your Name		Your Signature

TO: (*Forward direct to addressee listed in publication*)	FROM: (*Activity and location) (Include ZIP Code)*	**DATE:**
AMSTA-LC-CI / TECH PUBS, TACOM-RI 1 Rock Island Arsenal Rock Island, IL 61299-7630	Your mailing address	Date you filled out this form.

PART II – REPAIR PARTS AND SPECIAL TOOL LISTS AND SUPPLY CATALOGS/SUPPLY MANUALS

PUBLICATION NUMBER:	DATE:	TITLE:
TM 9-1290-364-14&P	15 November 2001	Operator, Unit, D.S., and G.S. Maint. Repair Parts and Special Tools List through Depot for Conventional Muzzle Velocity System M94 and, Communication Adapter (MCA)

PAGE NO.	COLM NO.	LINE NO.	NATIONAL STOCK NUMBER	REFERENCE NO.	FIGURE NO.	ITEM NO.	TOTAL NO. OF MAJOR ITEMS SUPPORTED	RECOMMENDED ACTION
9					2	2		Item 2, when ordered from the parts list, does not come as a flat washer. Please give correct P/N for the flat washer.

PART III – REMARKS (*Any general remarks or recommendations, or suggestions for improvement of publications and blank forms. Additional blank sheets may be used if more space is needed.)*

SAMPLE

TYPED NAME, GRADE OR TITLE	TELEPHONE EXCHANGE/AUTOVON, PLUS EXTENSION	SIGNATURE

UASPPC V3.00

RECOMMENDED CHANGES TO PUBLICATIONS AND BLANK FORMS For use of this form, see AR 25-30; the proponent agency is OAASA	Use Part II *(reverse)* for Repair Parts and Special Tool Lists (RPSTL) and Supply Catalogs/Supply Manuals (SC/SM).	DATE
TO: *(Forward to proponent of publication or form) (Include ZIP* AMSTA-LC-CI/TECH PUBS TACOM-RI 1 ROCK ISLAND ARSENAL ROCK ISLAND, IL 61299-7630	**FROM:** *(Activity and location) (Include ZIP Code)*	

PART I - ALL PUBLICATIONS (EXCEPT RPSTL AND SC/SM) AND BLANK FORMS

PUBLICATION/FORM NUMBER	DATE	TITLE
ARMY TM 9-1290-364-14&P	15 NOV 2001	CONVENTIONAL MUZZLE VELOCITY SYSTEM M94 AND, COMMUNICATION ADAPTER (MCA)

ITEM	PAGE	PARA-	LINE	FIGURE NO.	TABLE	RECOMMENDED CHANGES AND REASON

** Reference to line numbers within the paragraph or subparagraph.*

TYPED NAME, GRADE OR TITLE	TELEPHONE EXCHANGE/AUTOVON, PLUS EXTENSION	SIGNATURE

TO: *(Forward direct to addressee listed in publication)*	**FROM:** *(Activity and location) (Include ZIP Code)*	**DATE**
AMSTA-LC-CI/TECH PUBS TACOM-RI 1 ROCK ISLAND ARSENAL ROCK ISLAND, IL 61299-7630		

PART II - REPAIR PARTS AND SPECIAL TOOL LISTS AND SUPPLY CATALOGS/SUPPLY MANUALS

PUBLICATION NUMBER	DATE	TITLE
ARMY TM 9-1290-364-14&P	15 NOV 2001	CONVENTIONAL MUZZLE VELOCITY SYS M94 &, COMMUNICATION ADAPTER (MCA)

PAGE NO.	COLM NO.	LINE NO.	NATIONAL STOCK NUMBER	REFERENCE NO.	FIGURE NO.	ITEM NO.	TOTAL NO. OF MAJOR ITEMS SUPPORTED	RECOMMENDED ACTION

PART III - REMARKS *(Any general remarks or recommendations, or suggestions for improvement of publications and blank forms. Additional blank sheets may be used if more space is needed.)*

TYPED NAME, GRADE OR TITLE	TELEPHONE EXCHANGE/AUTOVON, PLUS EXTENSION	SIGNATURE

RECOMMENDED CHANGES TO PUBLICATIONS AND BLANK FORMS For use of this form, see AR 25-30; the proponent agency is OAASA	Use Part II *(reverse)* for Repair Parts and Special Tool Lists (RPSTL) and Supply Catalogs/Supply Manuals (SC/SM).	DATE
TO: *(Forward to proponent of publication or form) (Include ZIP* AMSTA-LC-CI/TECH PUBS TACOM-RI 1 ROCK ISLAND ARSENAL ROCK ISLAND, IL 61299-7630	**FROM:** *(Activity and location) (Include ZIP Code)*	

PART I - ALL PUBLICATIONS (EXCEPT RPSTL AND SC/SM) AND BLANK FORMS

PUBLICATION/FORM NUMBER	DATE	TITLE
ARMY TM 9-1290-364-14&P	15 NOV 2001	CONVENTIONAL MUZZLE VELOCITY SYSTEM M94 AND, COMMUNICATION ADAPTER (MCA)

ITEM	PAGE	PARA-	LINE	FIGURE NO.	TABLE	RECOMMENDED CHANGES AND REASON

** Reference to line numbers within the paragraph or subparagraph.*

TYPED NAME, GRADE OR TITLE	TELEPHONE EXCHANGE/AUTOVON, PLUS EXTENSION	SIGNATURE

TO: *(Forward direct to addressee listed in publication)*	**FROM:** *(Activity and location) (Include ZIP Code)*	**DATE**
AMSTA-LC-CI/TECH PUBS TACOM-RI 1 ROCK ISLAND ARSENAL ROCK ISLAND, IL 61299-7630		

PART II - REPAIR PARTS AND SPECIAL TOOL LISTS AND SUPPLY CATALOGS/SUPPLY MANUALS

PUBLICATION NUMBER	DATE	TITLE
ARMY TM 9-1290-364-14&P	15 NOV 2001	CONVENTIONAL MUZZLE VELOCITY SYS M94 &, COMMUNICATION ADAPTER (MCA)

PAGE NO.	COLM NO.	LINE NO.	NATIONAL STOCK NUMBER	REFERENCE NO.	FIGURE NO.	ITEM NO.	TOTAL NO. OF MAJOR ITEMS SUPPORTED	RECOMMENDED ACTION

PART III - REMARKS *(Any general remarks or recommendations, or suggestions for improvement of publications and blank forms. Additional blank sheets may be used if more space is needed.)*

TYPED NAME, GRADE OR TITLE	TELEPHONE EXCHANGE/AUTOVON, PLUS EXTENSION	SIGNATURE

RECOMMENDED CHANGES TO PUBLICATIONS AND BLANK FORMS For use of this form, see AR 25-30; the proponent agency is OAASA	Use Part II *(reverse)* for Repair Parts and Special Tool Lists (RPSTL) and Supply Catalogs/Supply Manuals (SC/SM).	DATE
TO: *(Forward to proponent of publication or form) (Include ZIP* AMSTA-LC-CI/TECH PUBS TACOM-RI 1 ROCK ISLAND ARSENAL ROCK ISLAND, IL 61299-7630	**FROM:** *(Activity and location) (Include ZIP Code)*	

PART I - ALL PUBLICATIONS (EXCEPT RPSTL AND SC/SM) AND BLANK FORMS

PUBLICATION/FORM NUMBER	DATE	TITLE
ARMY TM 9-1290-364-14&P	15 NOV 2001	CONVENTIONAL MUZZLE VELOCITY SYSTEM M94 AND, COMMUNICATION ADAPTER (MCA)

ITEM	PAGE	PARA-	LINE	FIGURE NO.	TABLE	RECOMMENDED CHANGES AND REASON

** Reference to line numbers within the paragraph or subparagraph.*

TYPED NAME, GRADE OR TITLE	TELEPHONE EXCHANGE/AUTOVON, PLUS EXTENSION	SIGNATURE

TO: *(Forward direct to addressee listed in publication)*	**FROM:** *(Activity and location) (Include ZIP Code)*	**DATE**
AMSTA-LC-CI/TECH PUBS TACOM-RI 1 ROCK ISLAND ARSENAL ROCK ISLAND, IL 61299-7630		

PART II - REPAIR PARTS AND SPECIAL TOOL LISTS AND SUPPLY CATALOGS/SUPPLY MANUALS

PUBLICATION NUMBER	DATE	TITLE
ARMY TM 9-1290-364-14&P	15 NOV 2001	CONVENTIONAL MUZZLE VELOCITY SYS M94 &, COMMUNICATION ADAPTER (MCA)

PAGE NO.	COLM NO.	LINE NO.	NATIONAL STOCK NUMBER	REFERENCE NO.	FIGURE NO.	ITEM NO.	TOTAL NO. OF MAJOR ITEMS SUPPORTED	RECOMMENDED ACTION

PART III - REMARKS *(Any general remarks or recommendations, or suggestions for improvement of publications and blank forms. Additional blank sheets may be used if more space is needed.)*

TYPED NAME, GRADE OR TITLE	TELEPHONE EXCHANGE/AUTOVON, PLUS EXTENSION	SIGNATURE

PIN: 075175